DWG. NO. SE52182

THIS DRAWING IS A CONTROLLED DOCUMENT FOR SOURIAU USA, INC. UNAUTHORIZED USE OR DISTRIBUTION IS PROHIBITED. CONTACT THE DOCUMENT OWNER TO OBTAIN THE LATEST REVISION.

▷6▷ PLATING TABLE

CATALOG NUMBER	PLATING	
SM14M/ML-1070	AREA 1 - 5 MICRO-INCHES (0.13 MICRONS)- 15 MICRO-INCHES (0.38 MICRONS) GOLD OVER NICKEL AREA 2 - GOLD FLASH	STANDARD PLATING
SM16M/ML-11070		
SM16M/ML-1070		
SM20M/ML-1070		
SM24M/ML-1070		
SM14M/ML-1TK6	TIN PLATING. 20 MICRO-INCHES (0.5 MICRON) MIN. TIN	
SM16M/ML-11TK6		
SM16M/ML-1TK6		
SM20M/ML-1TK6		
SM24M/ML-1TK6		
SM14M/ML-1S6	AREA 1 - 30 MICRO-INCHES (0.76 MICRONS)- 50 MICRO-INCHES (1.3 MICRONS) GOLD OVER NICKEL AREA 2 - GOLD FLASH	
SM16M-1S6		
SM16M/ML-1S6		
SM20M/ML-1S6		
SM24M/ML-1S6		
SM14M/ML-1S30	AREA 1 - 5-15 MICRO-INCHES (0.13-0.38 MICRONS) GOLD OVER NICKEL AREA 3 - 50 MICRO-INCHES (1.3 MICRONS) MIN. TIN OVER NICKEL AREA 4 - 50 MICRO-INCHES (1.3 MICRONS) MIN. NICKEL	SELECTIVE PLATING
SM16M/ML-1S30		
SM16M-11S30		
SM20M-1S30		
SM24M-1S30		
SM14M/ML-1S18	AREA 1 - 30-50 MICRO-INCHES (0.76-1.3 MICRONS) GOLD OVER NICKEL AREA 3 - 50 MICRO-INCHES (1.3 MICRONS) MIN. TIN OVER NICKEL AREA 4 - 50 MICRO-INCHES (1.3 MICRONS) MIN. NICKEL	
SM16M/ML-1S18		
SM16M-11S18		
SM20M-1S18		
SM24M-1S18		
SM14M/ML-1S31	AREA 1 - 5 MICRO-INCH (.025 MICRON) MIN. GOLD OVER 50 MICRO-INCH (1.27 MICRON) MIN. NICKEL AREA 3 - 50 MICRO-INCH (1.3 MICRON) MIN. TIN OVER NICKEL AREA 4 - 50 MICRO-INCH (1.3 MICRON) MIN. NICKEL	
SM16M-11S31		
SM16M/ML-1S31		
SM20M/ML-1S31		
SM24M/ML-1S31		

RoHS COMPLIANT

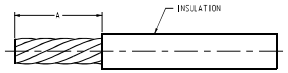

SUGGESTED WIRE STRIP LENGTH SCALE 10:1

NOTES: UNLESS OTHERWISE SPECIFIED

1. ▷ CONTACTS ARE FURNISHED ON A STRIP, TO BE INSTALLED BY THE UTM-2 INSTALLATION MACHINE.
2. ▷ FOR MBND AND YBND HAND TOOL USE, CONTACTS MUST BE CUT FROM STRIP THROUGH SELVAGE AS INDICATED BY DASH LINES. REMAINING PIECE OF CARRY STRIP IS USED AS A LOCATOR IN THE HAND TOOL AND CAN BE EASILY REMOVED AFTER INSTALLATION BY BENDING UNTIL IT BREAKS OFF.
3. ▷ SM__ML-_ CONTACTS ARE SUPPLIED LOOSE AND WITH MODIFIED CRIMP SADDLES AND CRIMPED WITH THE YMAMS, MBND, YBND HAND TOOLS.
4. ▷ SM16M-16 CONTACT CAN BE ACCOMODATED BY QIKMATE CONNECTORS. WHEN INSULATION DIAMETER RANGE IS .062-.118 (2.08-3.00) FOR OTHER TRIM TRIO CONNECTORS. MAXIMUM INSULATION DIAMETER IS .103(2.62).
5. ▷ CONTACTS ARE INSTALLED BY HAND, AND SNAP LOCKED IN CAVITIES. AN EXTRACTION TOOL IS USED TO REMOVE CONTACTS FROM CAVITIES.
6. ▷ SOURIAU LABEL.
7. MATERIAL:
   CONTACT - BRASS
   RETAINING SPRING - STAINLESS STEEL
8. ▷ FINISH.
   CONTACT - SEE PLATING TABLE
9. REFERENCE:
   SE52184, SM__M/ML-1___
   BBSE62A127, SM/SC__M-___
   SD6757-2, SM/SC__M-_____
   SAB2876, SC/SM__M-3__
   GFJC 203035.001.01 BEDIUM CUSTOMER DRAWING REVERSE REEL
10. ▷ DATA TABLE

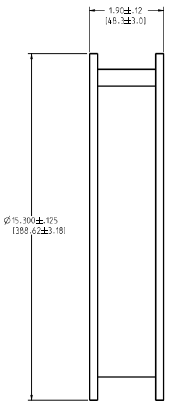

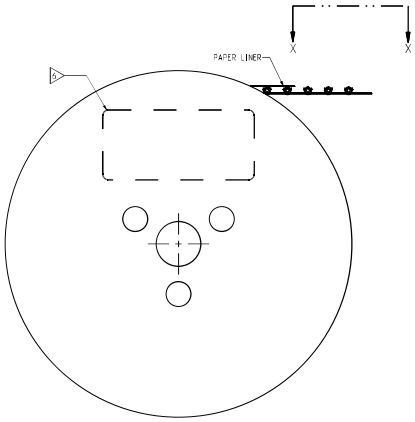

REEL FRONT
NO SCALE

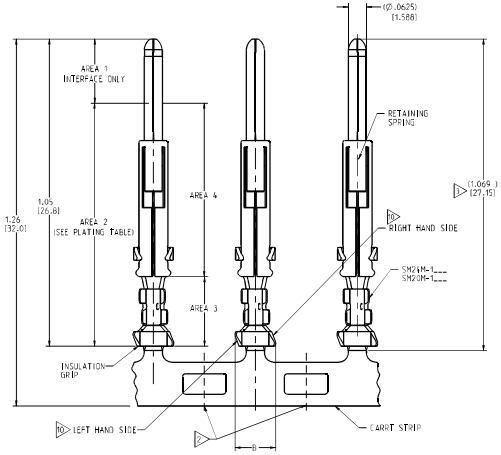

VIEW X-X
SEE ALTERNATE VIEWS Y AND Z
REEL FRONT

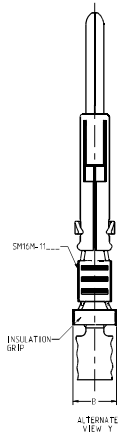

ALTERNATE VIEW Y

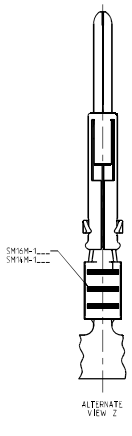

ALTERNATE VIEW Z

▷10▷ DATA TABLE

CONTACT CATALOG NUMBER	WIRE SIZE AND TYPE	CABLE INSULATION ACCOMODATION MAX.	CABLE INSULATION ACCOMODATION MIN.	QTY. PER REEL	STAMPING LEFT-HAND SIDE	STAMPING RIGHT-HAND SIDE	"A" ±.016 (0.40)	"B"	▷▷▷ INSTALLATION TOOL HAND TOOL MBND OR YBND DIE SET CAT NUMBER	INSTALLATION TOOL HANDTOOL	INSTALLATION TOOL UTM-2 CRIMP MECHANISM	▷ EXTRACTION TOOL
SM24M-1___	26-24 AWG	.062 (1.57)	.035 (0.89)	3000	24	26	.156 (3.96)	.128 (3.25)	N24RT-11	-	CM11G1	RX16D1101
▷ SM24ML-1___				-					-	Y14MS	-	
SM20M-1___	22-20 AWG	.082 (2.08)	.046 (1.17)	3000	20	22	.156 (3.96)	.139 (3.53)	N20RT-29	-	-	
▷ SM20ML-1___				-					-	Y14MS	-	
SM16M-1___	18-16 AWG	-	-	3000	16	18	.250 (6.35)	-	N16RT-24	-	CM11	
▷ SM16ML-1___				-					-	Y14MS	-	
▷6▷ SM16M-11___	18-16 AWG	.118 (3.00)	.082 (2.08)	3000	16	18	.188 (4.78)	.146 (3.71)	N16RT-26	-	CM27	
-				-					-	-	-	
SM14M-1___	14 AWG	-	-	3000	14	14	.250 (6.35)	-	N14RT-13	-	CM11	
▷ SM14ML-1___				-					-	Y14MS	-	

LINEAR MEASURE	(INCH)	(MM)
THIRD ANGLE PROJECTION		

TOLERANCES UNLESS OTHERWISE SPECIFIED	INCH (MM)
ONE PLACE	±.1 (±3)
TWO PLACES	±.02 (±0.5)
THREE PLACES	±.010 (±0.25)
ANGLES	±2°

REV	DESCRIPTION	BY DATE	CHKD DATE
AC	REVISED PER ECN 11390	WPP 3/21/11	JD 2/25/11
AB	REVISED PER ECN 11081	RAMJL 04-15-10	RPP 04-15-10
AA	REVISED PER ECN 7813	DH 05-02-03	DH 05-02-03

DRAWING TITLE
STRIP HYFEN PIN REEL ASSEMBLY

CAT NO.
SM__M/ML-_____ (SEE TABLE)

CAGE NO: 09922 SIZE: D

CUSTOMER

INTERPRET THIS DRAWING IN ACCORDANCE WITH ASME Y14.5M - 1994.

SOURIAU
www.souriau.com

APPROVAL		
DRAWN:	RAMJL	01-19-10
CHK'D:	RPP	01-19-10
DSGN:	XXX	00-00-00
PRG:	DH	01-19-10
QC:	BB	01-19-10

DRAWING SCALE: 5:1
DRAWING NO. SE52182 REV AC
1 OF 1

PRO-E

THE INFORMATION CONTAINED IN THIS DRAWING IS PROPRIETARY AND MAY NOT BE DISCLOSED WITHOUT WRITTEN PERMISSION FROM SOURIAU, INC.