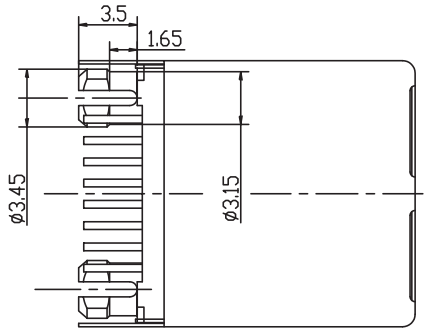

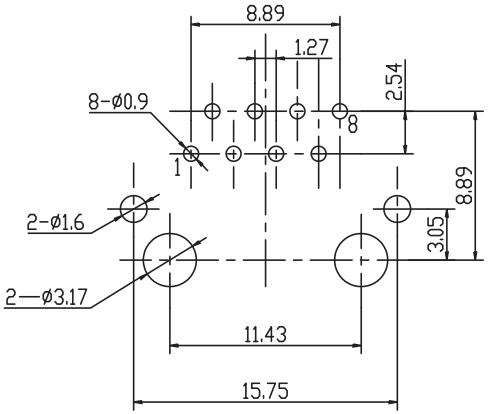

PCB LAYOUT - COMPONENT VIEW

TECHNICAL CHARACTERISTICS

MATERIAL
INSULATOR MATERIAL: PBT
FLAMMABILITY RATING UL94-V0
COLOR: BLACK
CONTACT MATERIAL: COPPER ALLOY
CONTACT TYPE: STAMPED
CONTACT PLATING: SELECTIVE GOLD
SHIELDING: BRONZE NI PLATED
QUALITY CLASS: 500 MATING CYCLES

ENVIRONMENTAL
OPERATING TEMPERATURE: –40 °C UP TO 85 °C
COMPLIANCE: LEAD FREE AND ROHS

ELECTRICAL
CURRENT RATING: 1.5 A
WORKING VOLTAGE: 120 VAC
INSULATION RESISTANCE: >500 MΩ
DIELECTRIC WITHSTANDING VOLTAGE: 1 000 VAC/MIN
CONTACT RESISTANCE: 20 mΩ MAX

STANDARD
UL CERTIFIED: E324776

SOLDERING
JEDEC LEAD FREE WAVE SOLDERING PROCESS

PACKAGING
TRAY

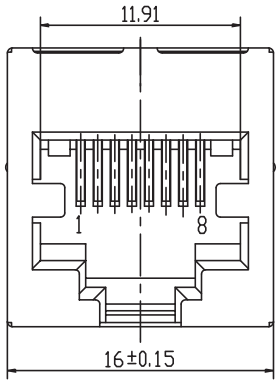

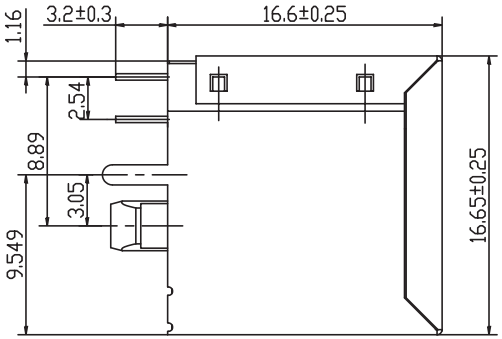

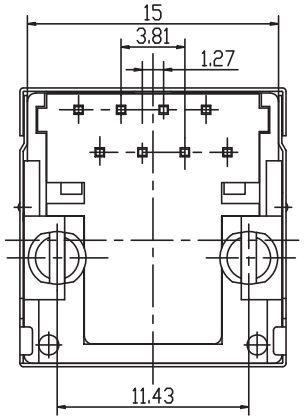

RoHS Compliant

REV	DATE	FILE	BY
G			
F	03-JAN-14	UL & TEMP UPDATE	QL
E	20-AUG-13	DIM UPDATE	QL
D	19-FEB-11	PLATING	GG
C	07-OCT-09	UL STANDARD	JP
B	06-OCT-09	CHARACTERISTIC	JP
A	03-FEB-07	PDF	CH

PROJECTION:

APPROVAL: RJ

GENERAL TOLERANCE
.X = +/- 0.2
.XX = +/- 0.15

UNIT: MM
SCALE:
SHEET: 1/1
DRAW:

WÜRTH ELEKTRONIK

DESCRIPTION: VERTICAL SHIELDED 8P8C REAR POST MODULAR JACK

WERI PART NO: 615 008 140 421

SIZE
A4