Revision History		
Rev	Description	Date
1	Release	9/13/2022
2	Add reference dims and CG thickness	4/3/2024
3	Update Title Block & Add Entrance Pupil	10/18/2024

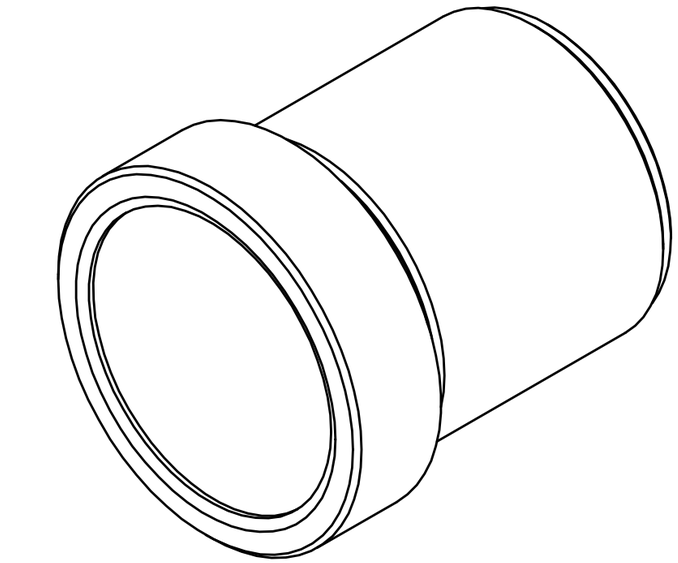

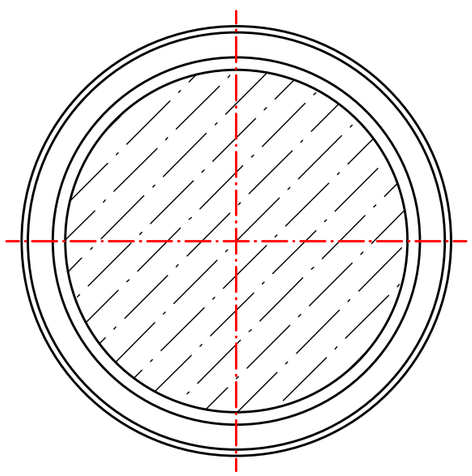

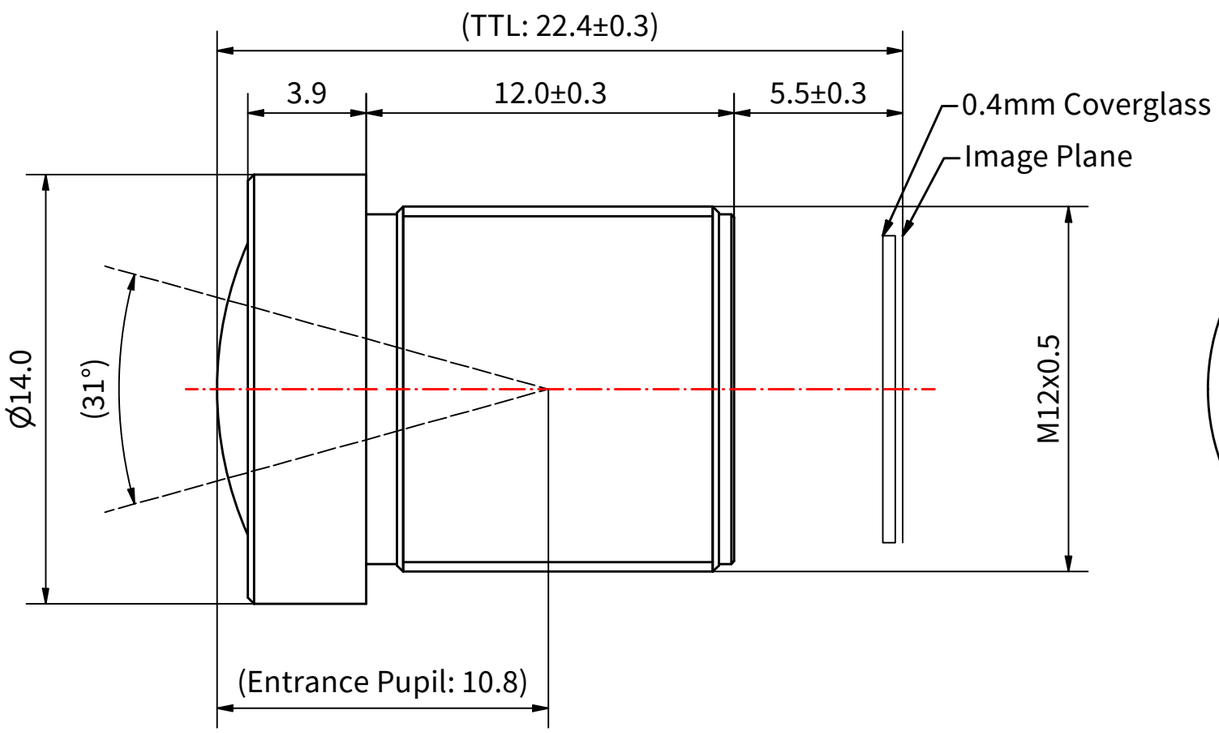

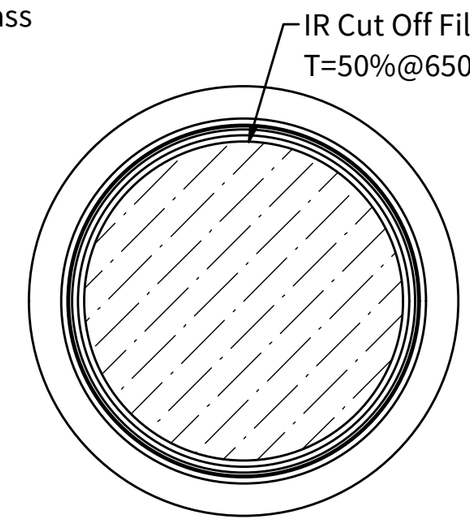

Notes:
1.) Dimensions in parentheses are for reference only.

	Name	Date
Drawn	Jason Holtkamp	10/18/2024
Checked		
QA Appr.		

Effective Focal Length (EFL) 16.0mm	Format Type 1/1.8"~1/1.7"	Nominal Resolution 8MP, 2.1µm
F/# 5.6	Design Image Circle 8.8mm	Max Image Circle 11.9mm
Chief Ray Angle (CRA) 10° @ 8.9mm ImCirc	Operating Temperature /	Storage Temperature /
Optical Construction 6G	Barrel Material AL6061	Weight 6g

Image Circle	FOV	Distortion Rectilin.	Distortion F-θ	Distortion TV (4:3)
4.5mm	16°	-0.2%	+1%	-0.1%
8.0mm	28°	-0.5%	+2%	-0.3%
8.9mm	31°	-0.7%	+2%	-0.5%

UNLESS OTHERWISE SPECIFIED DIMENSIONS ARE IN MILLIMETERS
TOLERANCES:
MECHANICAL:
X ± 1
X.X ± 0.1
X.XX ± 0.01
OPTICAL:
±5% OF NOMINAL VALUE
THIRD ANGLE

TITLE: Telephoto 16mm M12 Lens
DATE: 10/18/2024

Commonlands LLC
San Diego, CA
+1 (858) 333-7325, engineering@commonlands.com

PART NUMBER: CIL160-F5.6-M12A650
SHEET 1 OF 1
DO NOT SCALE
REV: 3