Revision History		
Rev	Description	Date
1	Release	9/20/2024

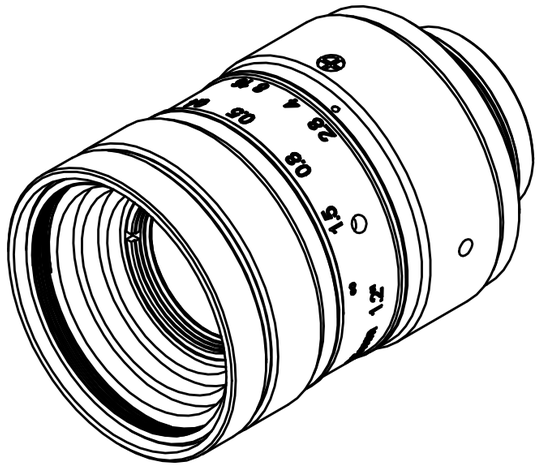

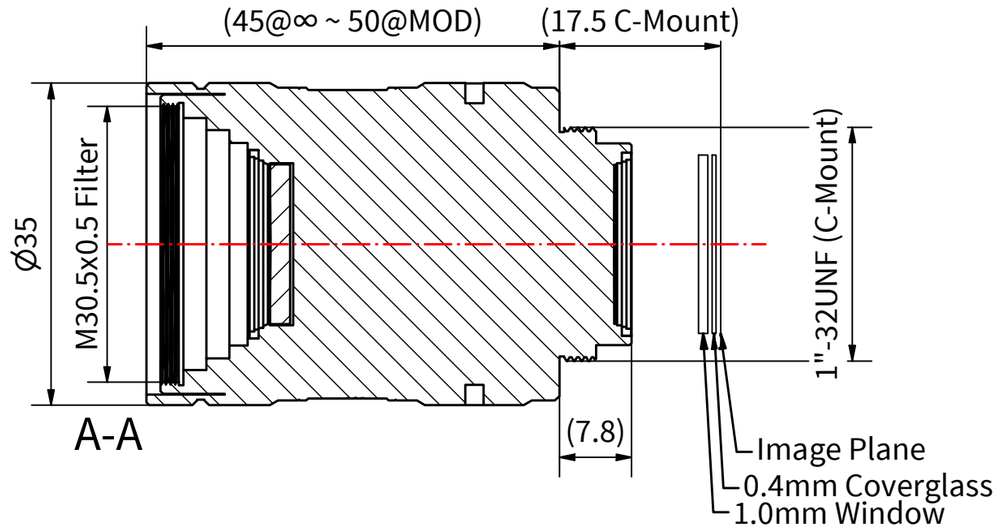

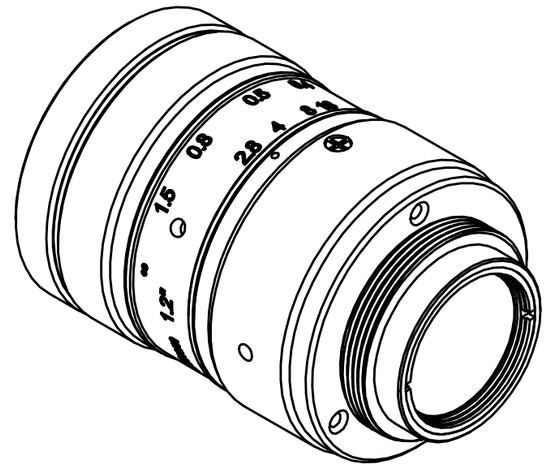

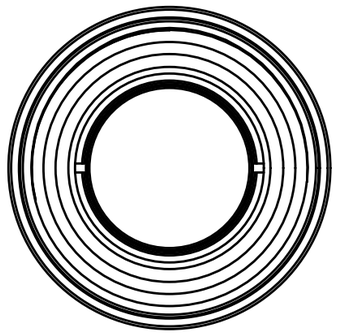

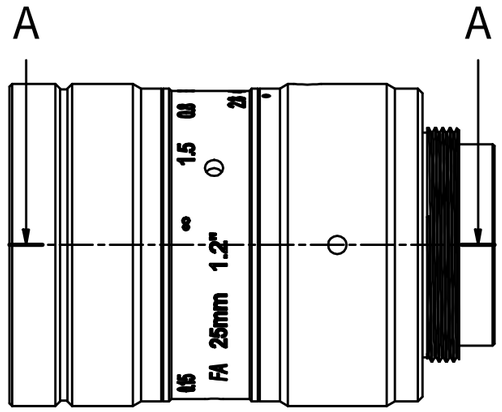

Notes:
1.) Dimensions in parentheses are for reference only.
2.) Must use ≥1mm total glass thickness, including sensor coverglass & protective window.

	Name	Date
Drawn	Jason Holtkamp	9/20/2024
Checked		
QA Appr.		

Image Circle (IC), Format Type	F# minimum	F# maximum
19.4mm, 1.2"	2.6±10%	16±10%
Minimum Obj. Distance (MoD)	Resolution & Pixel Pitch	
150mm	25MP	
Chief Ray Angle at IC	Weight	
	78g	
Optical Construction	Barrel Material	
Glass	AL6061	

EFL minimum	EFL maximum
25mm	

Im.Circle	FoV @ EFLmin	Dist @ EFLmin	FoV @ EFLmax	Dist @ EFLmax

Third Angle

Scale: Not To Scale
All Dimensions in mm

Unless otherwise specified
Standard tolerances are:
Optical: X.X ± 5%, X.XX ± 5%
Mechanical: X.X ± 0.1mm

25mm C-Mount Lens

Date: 9/20/2024

Commonlands LLC
San Diego, CA
+1 (858) 333-7325, engineering@commonlands.com

CIL554-F2.6-CMANIR

Rev. 1