REVISION HISTORY		
Rev	Description	Date
1	Release	8/9/2022
2	Add Reference Dimensions	7/7/2023
3	Update Title Block & Add Projected View	8/6/2024
4	Update MBFL & Formatting	10/14/2024

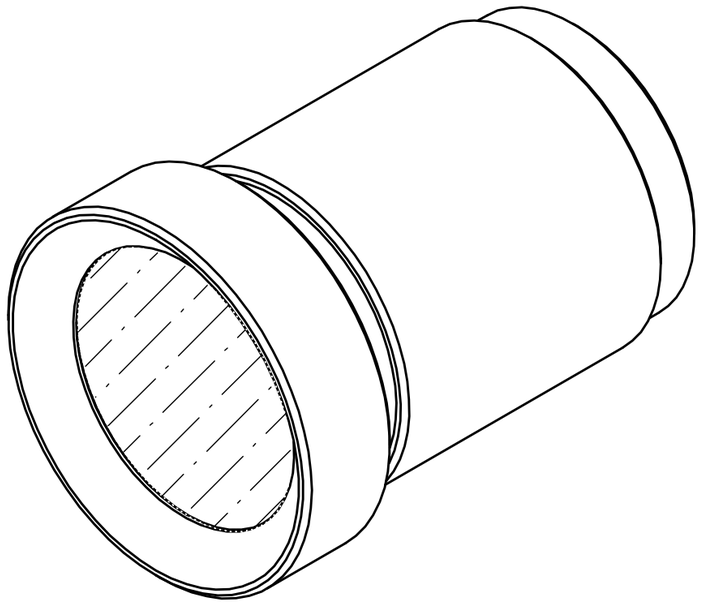

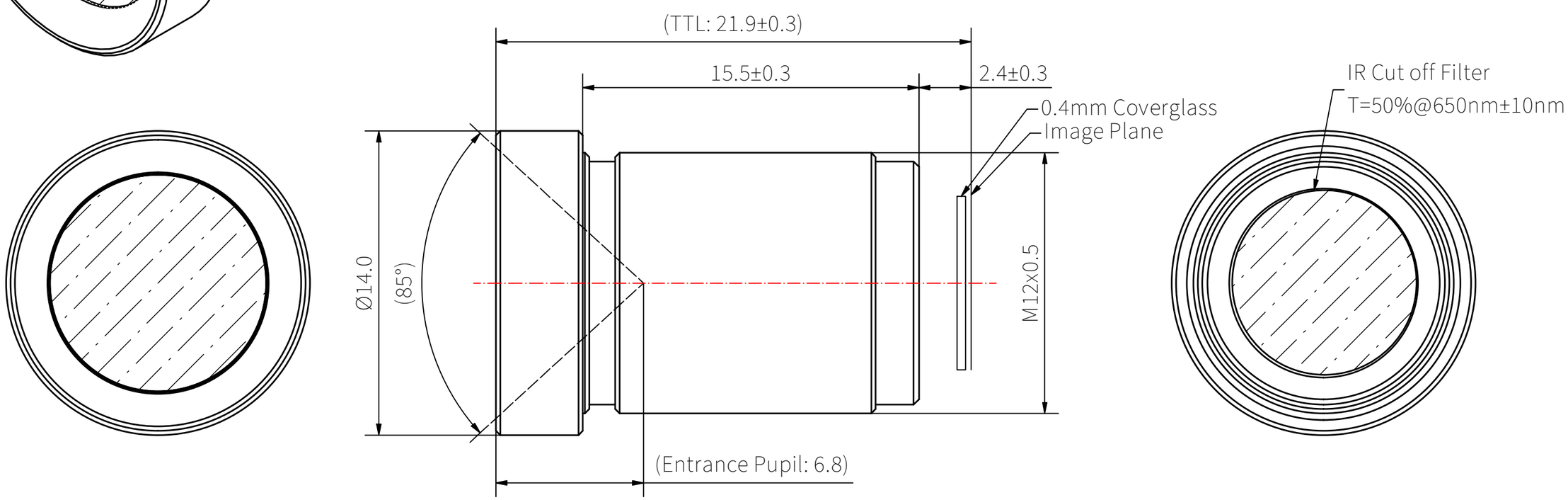

Notes:
1.) Dimensions in parentheses are for reference only.
2.) IP67-rated.

	Name	Date
Drawn	Jason Holtkamp	10/14/2024
Checked		
QA Appr.		

Effective Focal Length (EFL) 4.4mm	Format Type 1/2"	Nominal Resolution 10MP, 1.55µm
F/# 3.2	Design Image Circle 7.4mm	Max Image Circle 8.1mm
Chief Ray Angle (CRA) 17°	Operating Temperature /	Storage Temperature /
Optical Construction 4G2P	Barrel Material AL6061	Weight 8g

Image Circle	FOV	Distortion Rectilin.	Distortion F-θ	Distortion TV (4:3)
4.7mm	56°	-0.4%	+9%	-0.2%
6.3mm	72°	-0.6%	+15%	-0.4%
7.9mm	85°	-0.9%	+22%	-0.6%

UNLESS OTHERWISE SPECIFIED DIMENSIONS ARE IN MILLIMETERS
TOLERANCES:
MECHANICAL:
X ± 1
X.X ± 0.1
X.XX ± 0.01
OPTICAL:
±5% OF NOMINAL VALUE
THIRD ANGLE

TITLE: 4.4mm M12 Lens
DATE: 10/14/2024

Commonlands LLC
San Diego, CA
+1 (858) 333-7325, engineering@commonlands.com

PART NUMBER: CIL043-F3.2-M12B650
SHEET 1 OF 1
DO NOT SCALE
REV: 4