Revision History		
Rev	Description	Date
1	Release	8/21/2024

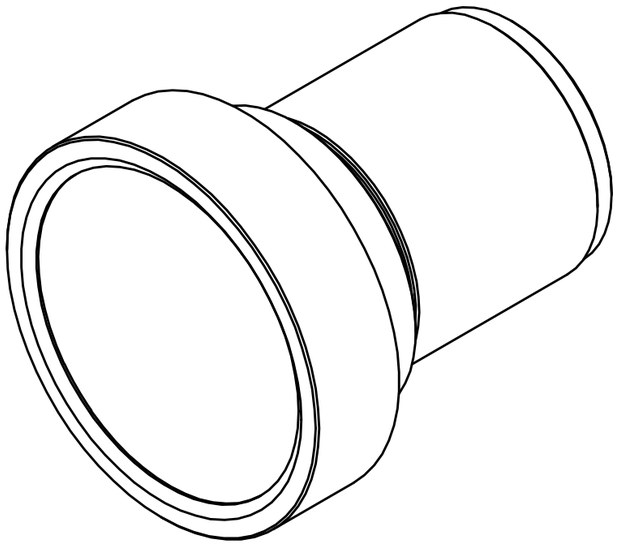

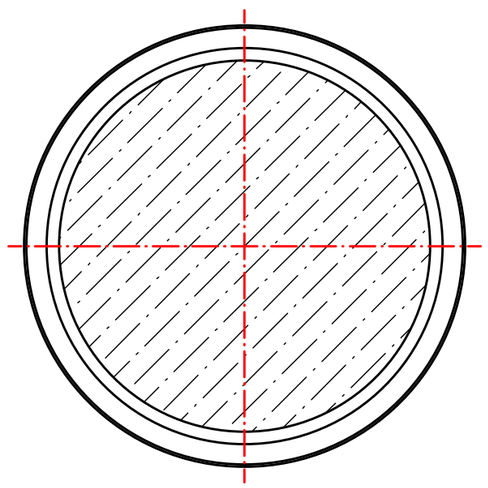

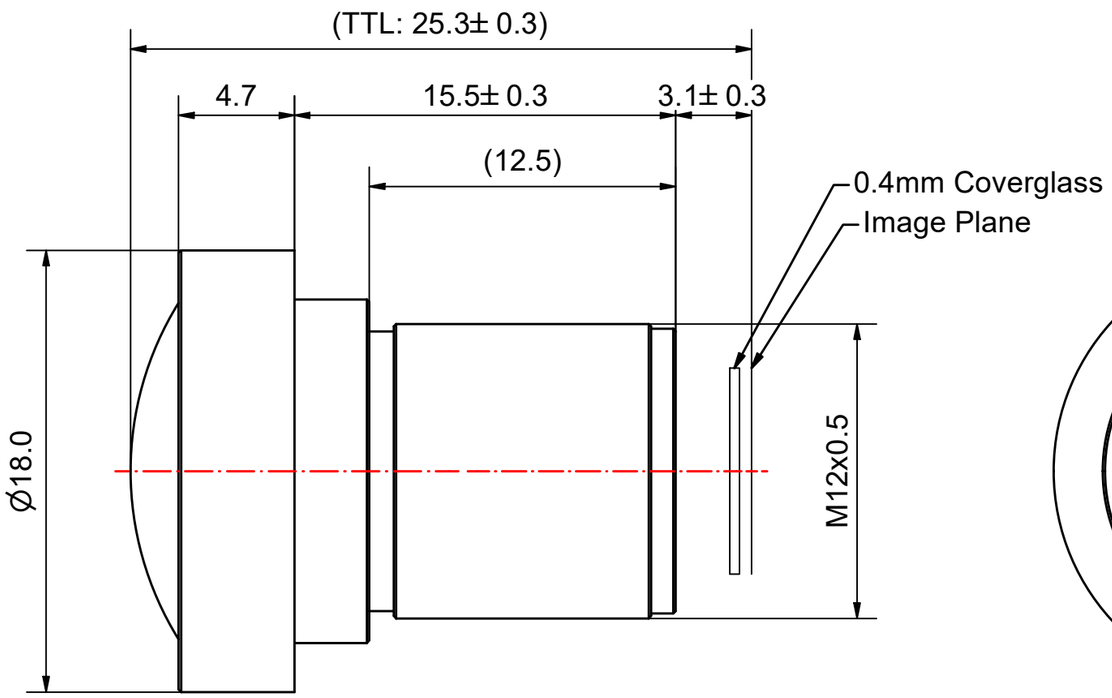

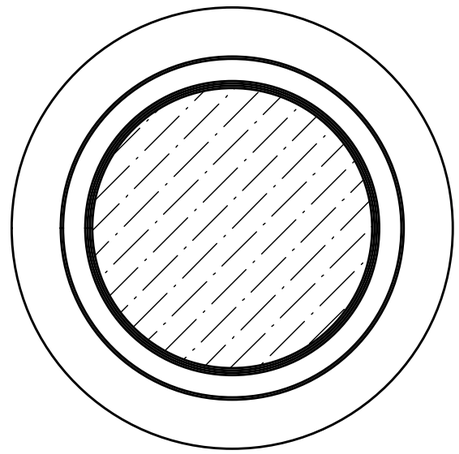

Notes:
1.) Dimensions in parentheses are for reference only.
2.) No filter.

	Name	Date
Drawn	Jason Holtkamp	8/21/2024
Checked		
QA Appr.		

Effective Focal Length (EFL)	Format Type	Nominal Resolution
3.85mm	1/2"	4-5MP, 3µm
F/#	Design Image Circle	Max Image Circle
3.0	7.8mm	8.2mm
Chief Ray Angle (CRA)	Operating Temperature	Storage Temperature
14° @ 8.0mm ImCirc	/	/
Optical Construction	Barrel Material	Weight
8G	AL6061	9.4g

Image Circle	FOV	Distortion Rectilin.	Distortion F-θ	Distortion TV (4:3)
4.0mm	55°	-1.5%	/	0%
7.0mm	85°	0%	/	<1%
8.0mm	92°	+0.8%	/	<1%

UNLESS OTHERWISE SPECIFIED DIMENSIONS ARE IN MILLIMETERS
TOLERANCES:
MECHANICAL:
X ± 1
X.X ± 0.1
X.XX ± 0.01
OPTICAL:
±5% OF NOMINAL VALUE
THIRD ANGLE

TITLE: 3.8mm M12 Lens
DATE: 8/21/2024

Commonlands LLC
San Diego, CA
+1 (858) 333-7325, engineering@commonlands.com

PART NUMBER: CIL038-F3.0-M12ANIR
SHEET 1 OF 1
DO NOT SCALE
REV: 1