CAT. NO.	COLOR
109 - 370SD - 001	BLACK
109 - 370SD - 002	WHITE/NATURAL

REV	DESCRIPTION	DATE

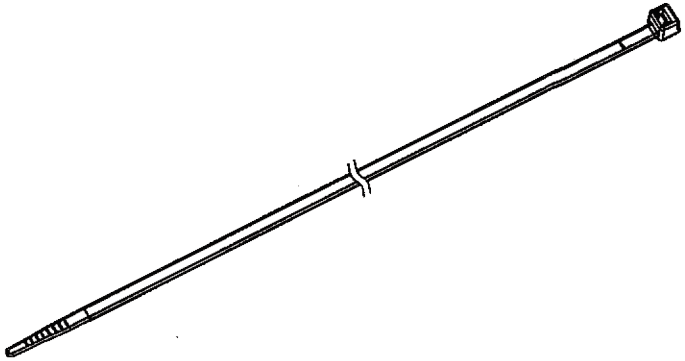

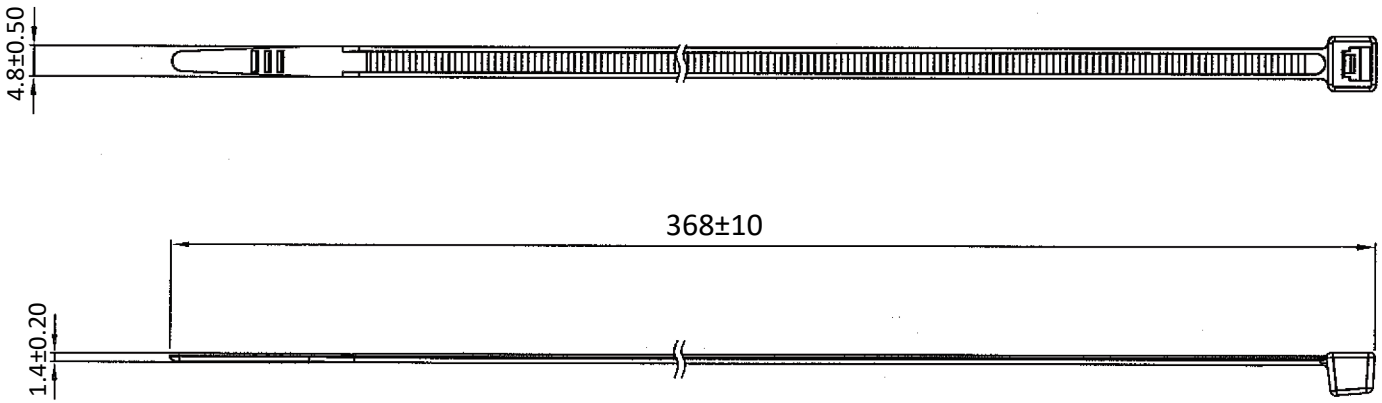

RoHS Compliant

NOTE:
1. FLAMMBILITY RATING : UL94V-2
2. MAX BUNDLE DIA. : 102 mm (4.02 inch)
3. MIN TENSILE STRENGTH : 50 lbs (22 kgs)
4. COLOR : SEE CHART

DRAWN: RYAN	Tolerance Unless Otherwise Specified	CnC Tech Industrial Cable and Connector Technology
CHECKED: SCOTT	MATERIAL : PA66	
	UNIT: mm	DESCRIPTION: CABLE TIES
	SCALE: 1/2	
APPROVAL: JEFF	SHEET: 1-0	PART NO: 109 - 370SD - X X X (SEE CHART)
	DATE: 2024/06/08	