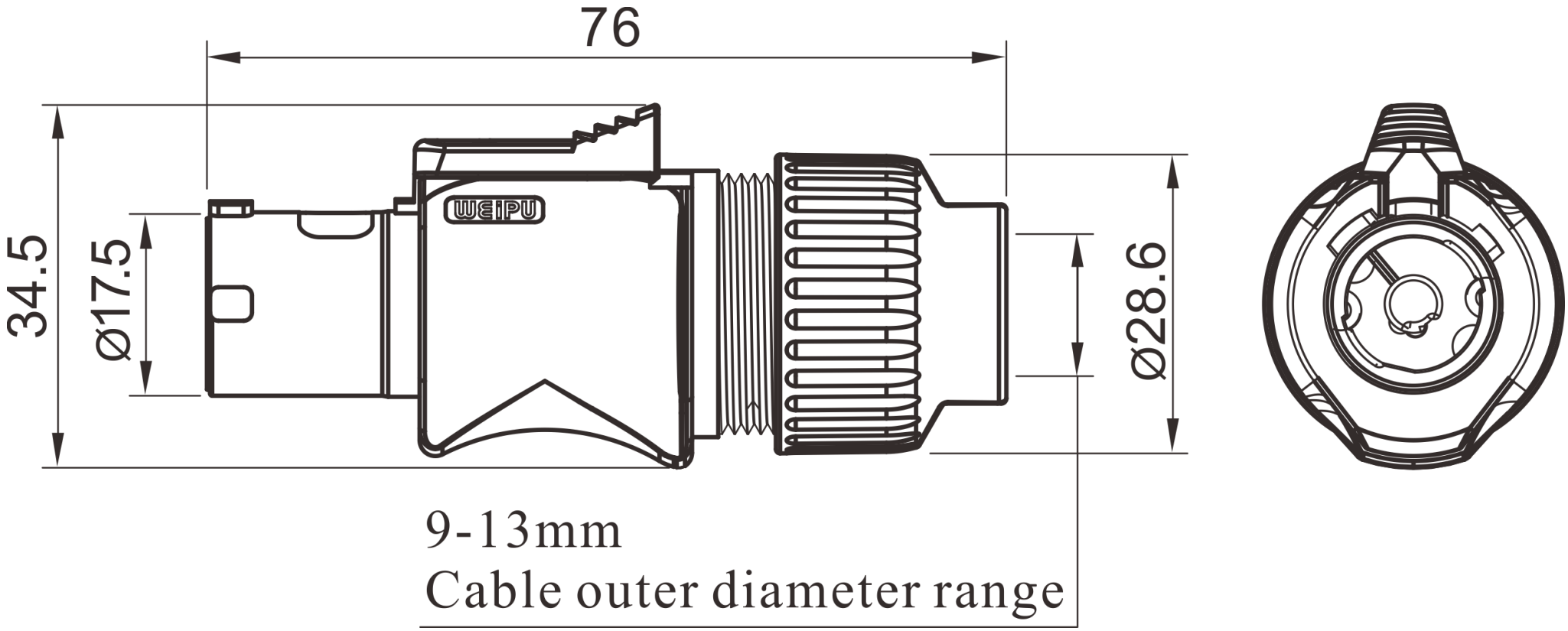
76
34.5
Ø17.5
WEIPU
Ø28.6
9-13mm
Cable outer diameter range