符合"DLK环境管理物质技术标准"

符合VESA协会规范标准"

工程变更通知单 ECN(DCN) NO.	版本 REV	日期 DATE	说明 DESCRIPTION	变更 CHANGE	核准 APPRO.
KSECN20023	C	20200827	取消背胶，增加ø5吸嘴区域 C *2	覃智森	严成旺
KSECN21040	D	20210730	增加卷装包装方式 D *1	蒋召	吴豪
KSECN22048	E	20221121	修改弹片高度，外壳增加“S”印字 E *1	邱 宇	吴豪

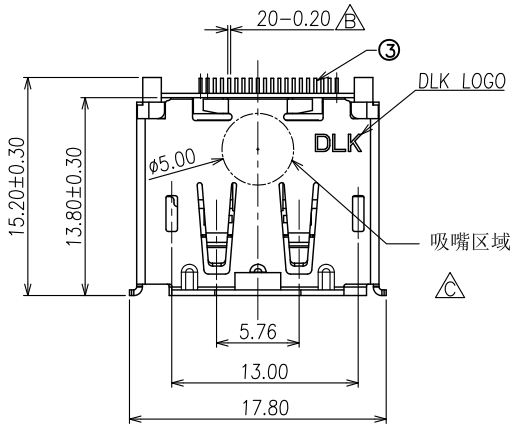

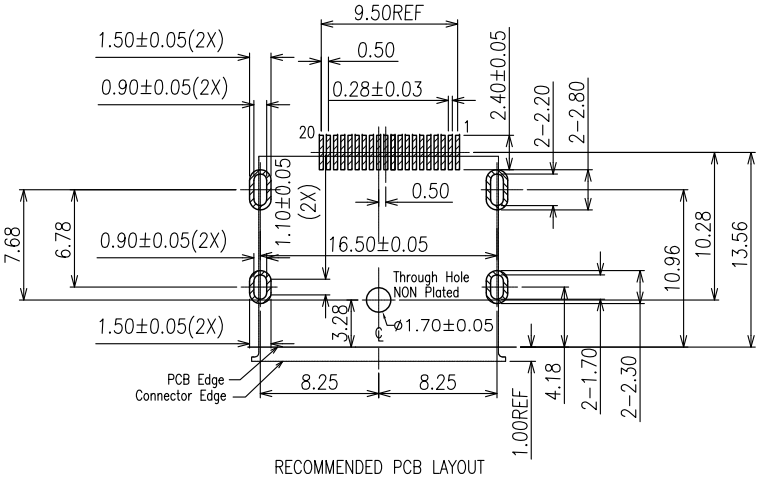

RECOMMENDED PCB LAYOUT

TOLERANCE: ±0.05mm

NOTE:
1. MATERIAL.
1.1 Housing: LCP UL94v-0, color: Black
1.2 Contact: Copper alloy
1.3 Shell: Copper alloy
2. PLATING:
2.1 Contact: 15u"Au plated on contact Area, 50u" Min. Matte Tin plated on solder tail, 50u" Min.Nickel underplated
2.2 Shell: Nickel plated overall
3. MECHANICAL:
3.1 Mating force:4.5kgf Max.
3.2 Unmating force:1.0~4.0kgf.
3.3 Durability:10000 cycles Min.
4 ELECTRICAL:
4.1 Current Rating:0.5A
4.2 Voltage Rating:40V
4.3 Dielectric strength:500V AC FOR 1 miniute
4.4 Insulation Resistance:100MΩ Min.
4.5 Contact Resistance:30mΩ Max
5. Operating Temperature:-55°c to +85°c
6. PACKING: Tape & Reely

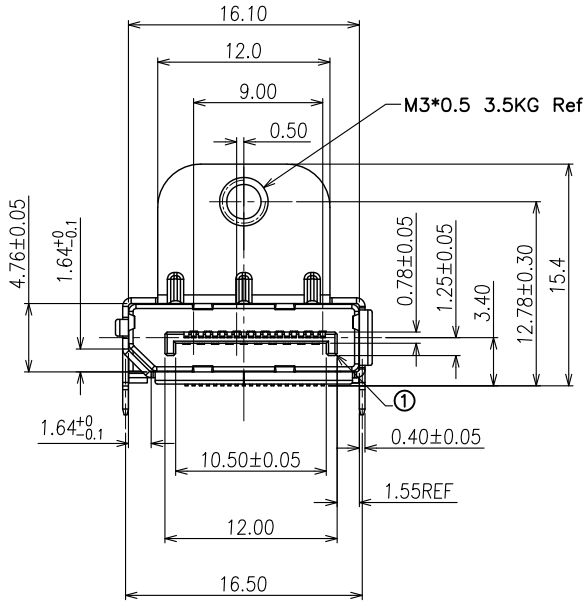

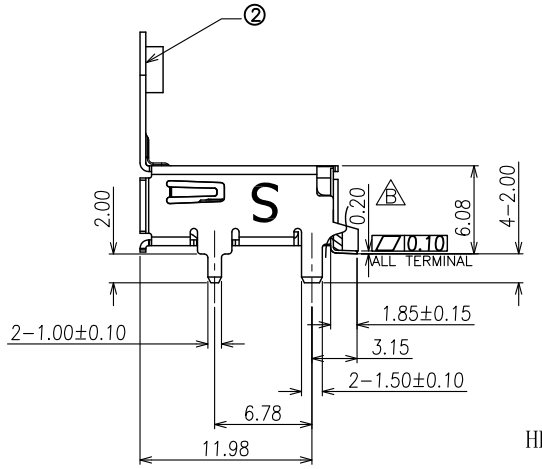

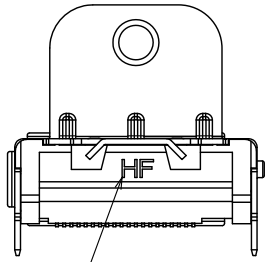

HF无卤字样

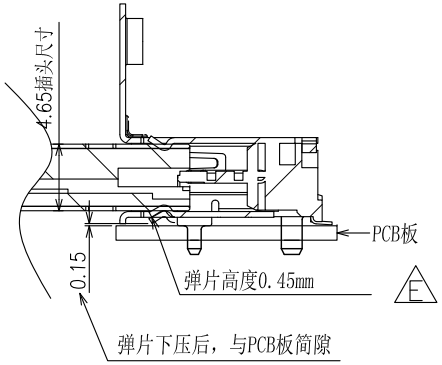

NO.	ITEM	Q'TY	DESCRIPTION	FINISH
3	CONTACT	20	COPPER ALLOY	PLATED Au
2	SHELL	1	COPPER ALLOY	PLATED NI
1	HOUSING	1	LCP	UL94V-0,Black

GENERAL TOLERANCE UNLESS OTHERWISE NOTED	
Angle	±5°
X.	±0.35
.X	±0.25
.XX	±0.15
.XXX	±0.10
A4	

德力康电子科技有限公司

DLK DELIKANG ELECTRONICS TECHNOLOGY CO.,LTD

C	名称 TITLE:	DisplayPort SMT Type 12.78H			
档案名称 FILE NAME.	C-DPT22-00-03		料号 PART NO:	62220B04131	
DRAWING	王永辉	CHECKED	~	APPROVED	严成旺
UNIT:	mm	SCALE	1:1	SHEET: 1 of 1	