符合"DLK环境管理物质技术标准"

符合USB3.0协会规范标准"

工程变更通知单 ECN(DCN) NO.	版本 REV	日期 DATE	说明 DESCRIPTION	变更 CHANGE	核准 APPRO.
KSECN21012	A	20210128	NEW RELEASE	——	——
KSECN21070	B	20211231	修改侧边弹片结构	覃智森	吴豪

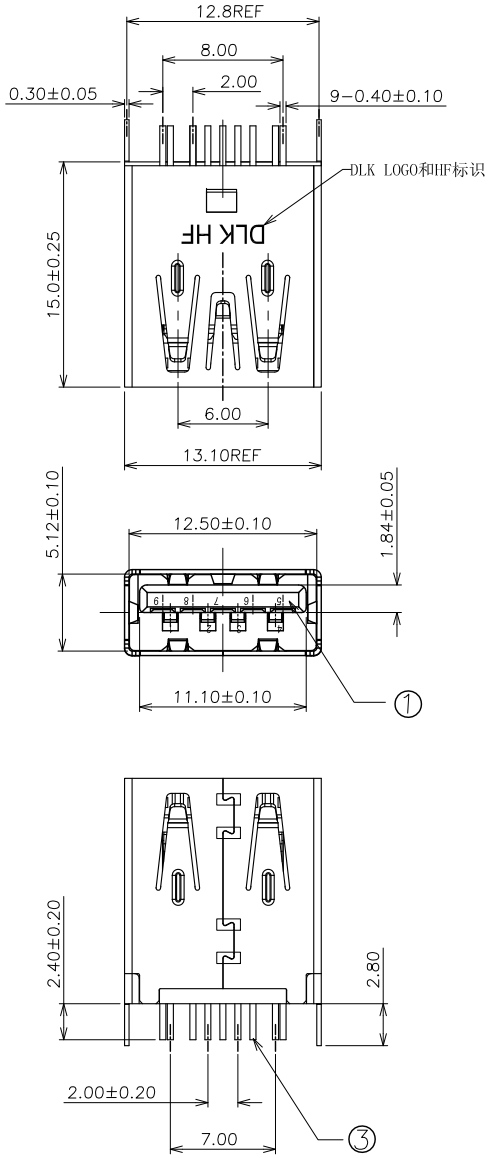

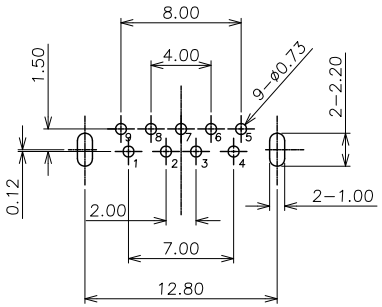

RECOMMENDED PCB LAYOUT

TOLERANCE: ±0.05mm

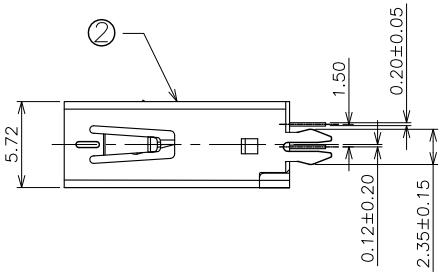

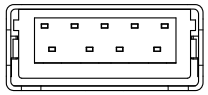

NOTE:

1. MATERIAL.
1.1 Housing: PA9T HF UL94v-0, color: Black
1.2 Contact: Phosphor bronze
1.3 Shell: Copper alloy
2. PLATING:
2.1 Contact: 15u" Au plated on contact Area,50u" Min. Matte Tin plated on solder tail,50u" Min. Nickel underplated
2.2 Shell: Nickel plated overall
3. MECHANICAL:
3.1 Mating force:3.57kgf Max.
3.2 Unmating force:1.02kgf Min.
3.3 Durability:1500 cycles Min.
4 ELECTRICAL:
4.1 Current Rating:1.5A
4.2 Voltage Rating:36V
4.3 Dielectric strength:500V AC FOR 1 miniute
4.4 Insulation Resistance:1000MΩ Min.
4.5 Contact Resistance:30mΩ Max
5. Operating Temperature:-55°c to +85°c
6. PACKING: Tray

NO.	ITEM	Q'TY	DESCRIPTION	FINISH
3	CONTACT	9	Phosphor bronze	Au PLATED
2	SHELL	1	Copper alloy	Ni PLATED
1	HOUSING	1	PA9T HF	UL94V-0 BLACK

GENERAL TOLERANCE UNLESS OTHERWISE NOTED	
Angle	±5°
X.	±0.35
.X	±0.25
.XX	±0.15
.XXX	±0.10
A4	

德力康电子科技有限公司

DLK DELIKANG ELECTRONICS TECHNOLOGY CO.,LTD

C	名称 TITLE:	USB 3.0 AF 180D 14.9H DIP			
档案名称 FILE NAME.	C-U3A27-02-HF		料号 PART NO:	22709B04221	
DRAWING	蒋 召	CHECKED	——	APPROVED	覃智森
UNIT:	mm	SCALE	1:1	SHEET: 1 of 1	