符合"DLK环境管理物质技术标准"

工程变更通知单 ECN(DCN) NO.	版本 REV	日期 DATE	说明 DESCRIPTION	改变 CHANGE	承认 APPRO.
KSECN21069	A	20211229	NEW RELEASE	——	——

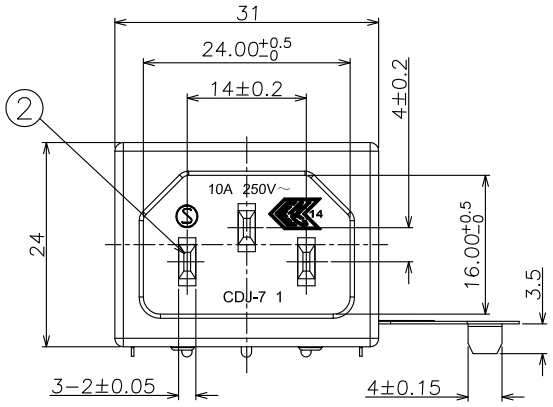

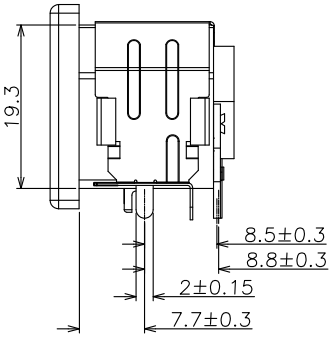

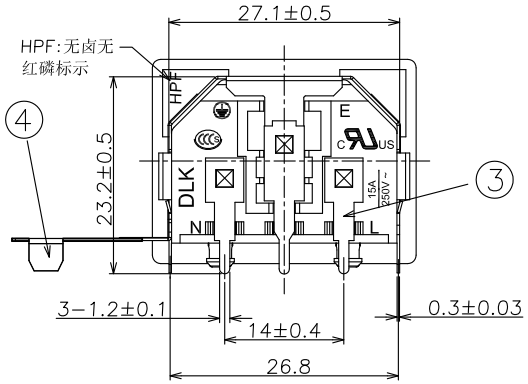

NOTE:
1. MATERIAL.
1.1 Housing: PA66 UL94v-0, color: Black
1.2 Contact: Copper alloy
1.3 Soldering Pin: Copper alloy
1.4 Soldering Pin: Ferro alloy
2. PLATING:
2.1 Contact: Nickel plated overall
2.2 Soldering Pin: Sn plated,Nickel underplated
3. MECHANICAL:
3.1 Mating force: 10~50N
3.2 Unmating force: 60N Max
3.3 Durability: 5000 cycles
4 ELECTRICAL:
4.1 Current Rating:2.5/7A
4.2 Voltage Rating:125/250V
4.3 Dielectric strength:2000V AC FOR 1 miniute
4.4 Insulation Resistance:100MΩ Min.
4.5 Contact Resistance:30mΩ Max
5. Operating Temperature:-55°c to +85°c
6. PACKING: Tray

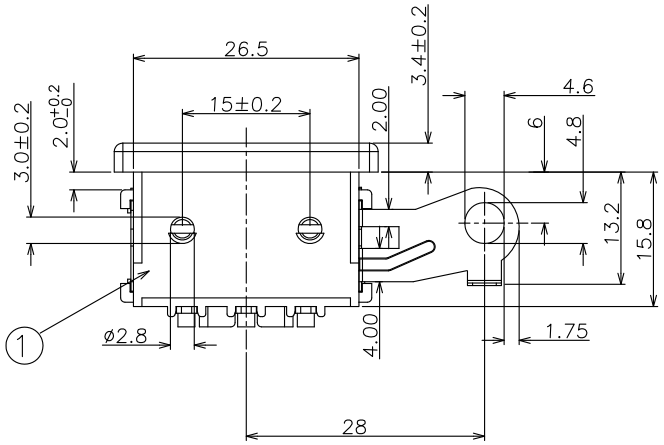

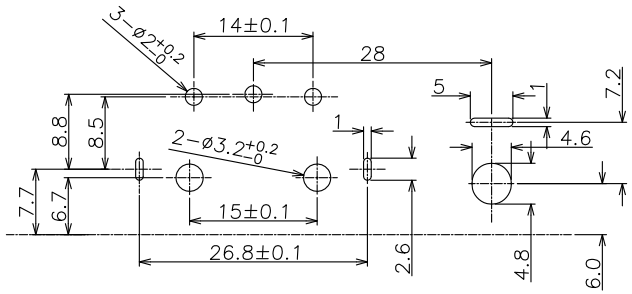

RECOMMENDED PCB PLAYOUT

TOLERANCE: ±0.05mm

NO.	ITEM	Q'TY	DESCRIPTION	FINISH
4	Soldering Pin	1	Ferro alloy	Tin
3	Soldering Pin	3	Copper alloy	Tin
2	Contact Pin	3	Copper alloy	Nickel
1	Housing	1	PA66 UL 94-V0 无卤无红磷	Black

GENERAL TOLERANCE UNLESS OTHERWISE NOTED	
Angle	±5°
X.	±0.35
.X	±0.25
.XX	±0.15
.XXX	±0.10
A4	

德力康电子科技有限公司
DELIKANG ELECTRONICS TECHNOLOGY CO.,LTD

C	名称 TITLE:	AC 90D 带右耳马口铁 无卤无红磷			
档案名称 FILE NAME:	C-ACT7K-00-01HPF	料号 PART NO:	77K03B43003		
DRAWING	蒋 召	CHECKED	覃智森	APPROVED	吴 豪
UNIT:	mm	SCALE	1:1	SHEET:	1 of 1