符合"DLK环境管理物质技术标准"

符合"IEC协会标准"

工程变更通知单 ECN(DCN) NO.	版本 REV	日期 DATE	说明 DESCRIPTION	改变 CHANGE	承认 APPRO.
KSECN14027	A	20140528	NEW RELEASE	——	——

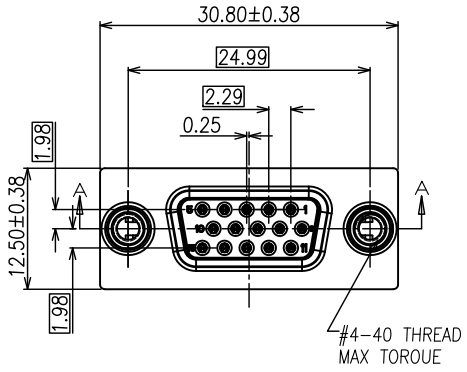

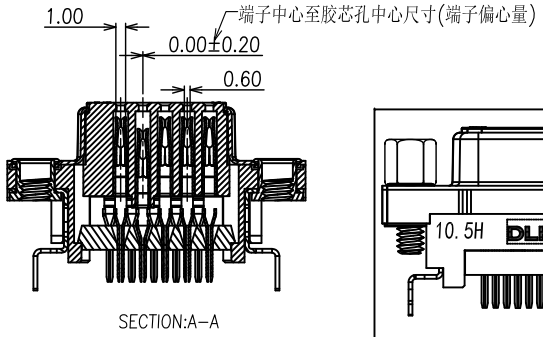

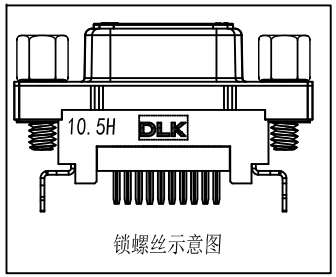

锁螺丝示意图

螺丝规格

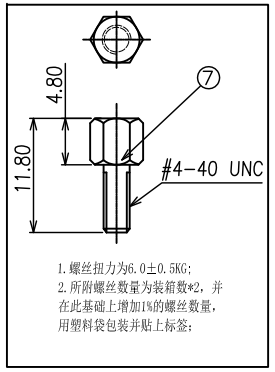

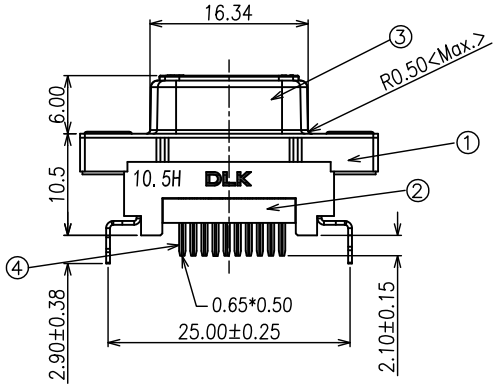

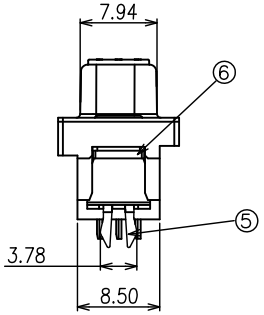

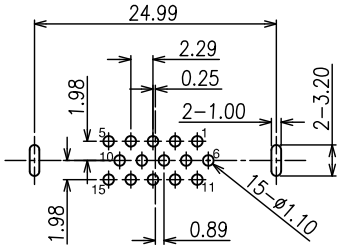

RECOMMENDED PCB LAYOUT

TOLERANCE: ±0.05mm

NOTE:
1. MATERIAL:
1.1 Housing: PBT UL94v-0, color: Blue
Cover: LCP UL94v-0, color: Black
1.2 Contact: Copper alloy
1.3 Shell: Ferro alloy
1.4 Rivet Insert:Ferro alloy
1.5 Rivet: Copper alloy
1.6 Screw: Ferro alloy
2. PLATING:
2.1 Contact: 1u"Au plated on contact Area, 100u" Min. Tin plated on solder tail, 50u" Min.Nickel underplated
2.2 Shell: Nickel plated overall
3. MECHANICAL:
3.1 Insertion force:2.0~5.0kgf.
3.2 Withdrawal force:1.0Kgf Min.
3.3 Durability:500 cycles Min.
4 ELECTRICAL:
4.1 Current Rating:1.0A
4.2 Voltage Rating:36V
4.3 Dielectric strength:500V AC FOR 1 miniute
4.4 Insulation Resistance:1000MΩ Min.
4.5 Contact Resistance:30mΩ Max
5. Operating Temperature:-55°c to +105°c
6. PACKING: Tray

NO.	ITEM	Q'TY	DESCRIPTION	FINISH
7	SCREW	2	FERROALLOY	Ni PLATED
6	RIVET	2	COPPER ALLOY	Ni PLATED
5	RIVET INSERT	2	FERROALLOY	Tin PLATED
4	CONTACT	15	COPPER ALLOY	Au AND Tin PLATED
3	SHELL	1	FERROALLOY	Ni PLATED
2	COVER	1	LCP BK	UL94V-0
1	HOUSING	1	PBT BLUE	UL94V-0

GENERAL TOLERANCE UNLESS OTHERWISE NOTED	
Angle	±5°
X.	±0.30
.X	±0.25
.XX	±0.15
.XXX	±0.10
A4	

德力康电子科技有限公司

DLK DELIKANG ELECTRONICS TECHNOLOGY CO.,LTD

C	名称 TITLE:	D-SUB V/T 母头,10.5H PIN脚2.1			
档案名称 FILE NAME.	C-DSB4F-00-06		料号 PART NO:	84F15L21360	
DRAWING	王永辉	CHECKED	——	APPROVED	严成旺
UNIT:	mm	SCALE	1:1	SHEET: 1 of 1	