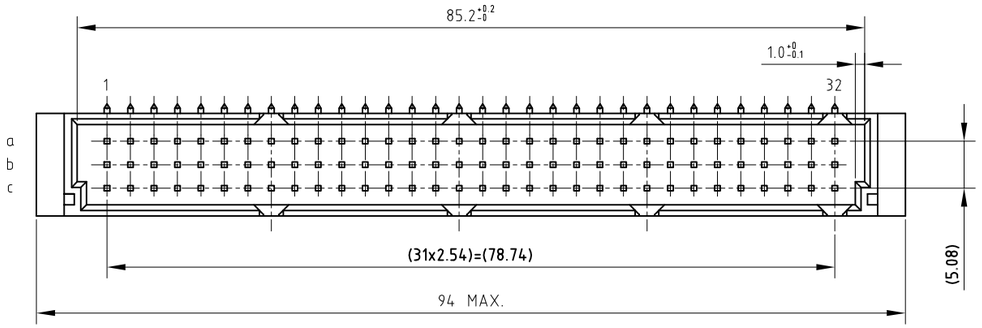

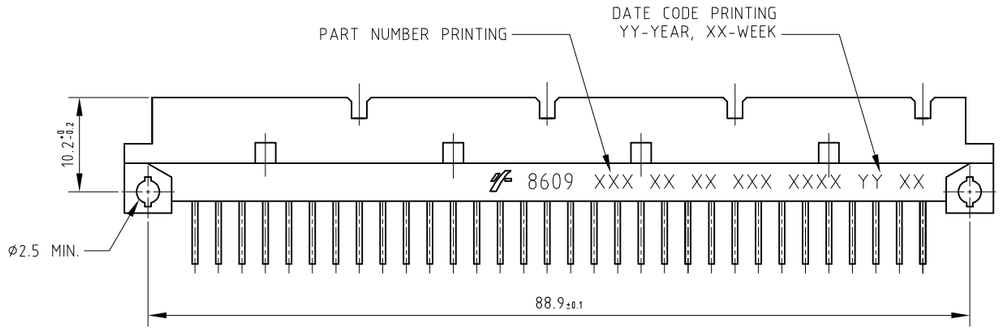

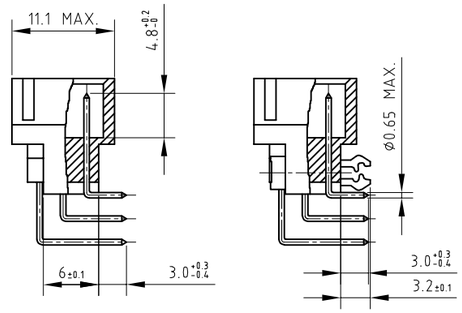

PCB DRILLING DETAILS

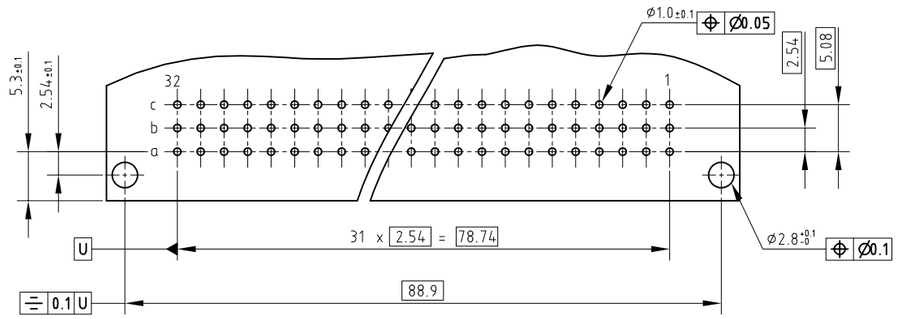

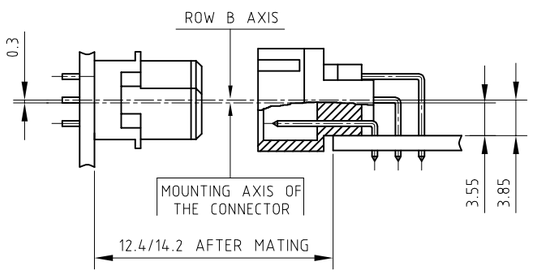

TECHNICAL SPECIFICATION

HOUSING MATERIAL	:	THERMOPLASTIC POLYESTER UL94V0; GREY
HOUSING CAN WITHSTAND EXPOSURE TO LEAD FREE WAVE SOLDERING TEMPERATURE OF 260-265°C		
WHEN USED WITH PROTECTIVE ADHESIVE OR PROTECTIVE METALLIC DEVICE FOR ANGLE CONNECTORS AS		
IT IS USED IN CLASSICAL LEAD WAVE SOLDERING AT 235-250°C.		
CONTACT & HARPOON MATERIAL	:	COPPER ALLOY
CONTACT PLATING		
CONTACT ZONE	:	Au OVER Ni (or) Au+Pd-Ni OVER Ni
TERMINATION ZONE	:	Sn (PURE MATT) OVER Ni FOR LEAD FREE VERSION
HARPOON PLATING	:	Sn (PURE MATT) OVER Ni FOR LEAD FREE VERSION

ELECTRICAL DATA

CURRENT RATING AT 20°C	:	1.5 A
CURRENT (I MAX)	:	2 A
TEMPERATURE RANGE	:	-55°C TO +125°C
CONTACT RESISTANCE	:	≤ 20mΩ
INSULATION RESISTANCE	:	$\geq 10^6$ MΩ
TEST VOLTAGE (rms)	:	1000 V

MECHANICAL DATA

INSERTION FORCE PER CONTACT	:	≤ 0.94 N
EXTRACTION FORCE PER CONTACT	:	≥ 0.15 N

REFERENCE SPECIFICATION : DIN 41612 / IEC 603-2

SERIES	8609	3	64	7	1	13	7	6	0	SKLF

ROWS FITTED WITH CONTACTS
ROW a b c — 3 — 64

NO. OF CONTACTS

TYPE OF INSULATOR
3 ROW MALE INSULATOR — 7

METHOD OF MOUNTING
STANDARD MOUNTING - STYLE C — 1

TERMINATION
ANGLED SPILL — 13

OPTIONS
NO OPTION — 7
WITH HARPOONS — H

PERFORMANCE CLASS
DIN 41612 CLASS 3 — 4
DIN 41612 CLASS 2 — 5
DIN 41612 CLASS 1 — 6
AS PER MIL C 55302 / JSS 50808 — 8

PITCH PER ROW
MIXED PITCH — 0

SPECIAL CODE: SPECIAL LOADING OF CONTACTS, LEAD FREE VERSION — SKLF

CONTACTS LOADED ONLY IN
a: 1,2,3,4,5,6,7,8,9,10,11,12,13,14,15,16,17,18,19,20,21,22,23,24,25,26,27,28,29,30,31,32
b: 2,4,6,8,10,12,14,16,18,20,22,24,26,28,30,32
c: 2,4,6,8,10,12,14,16,18,20,22,24,26,28,30,32

NOTES:

1. THE "LF" PRODUCTS MEET EUROPEAN UNION DIRECTIVES AND OTHER COUNTRY REGULATIONS AS DESCRIBED IN GS-47-0004.
2. THE HOUSING WILL WITHSTAND EXPOSURE TO 260°C PEAK TEMPERATURE FOR 3.5 SECONDS IN A WAVE SOLDER APPLICATION WITH A 1.6 MM MINIMUM THICK CIRCUIT BOARD.
3. LEAD FREE OR RoHS DIRECTIVE LABELING TO BE PROVIDED AS PER GS-14-920 FOR LEAD FREE VERSION.

ltr	ecn no	dr	date
A	I10-0164	SAL	2010-08-16
B	ELX-I-25006	MJA	2016-09-22
C	ELX-I-41641	MJA	2021-07-20

dr	JOHN SLEEBA	2008-09-05
engr	JOHN SLEEBA	2008-09-05
chr	M JACOB	2021-07-20
appd	SANOJ	2021-07-20

mat'l. code: SEE TECH. SPEC.
surface: ISO 1302
tolerance: ISO 406 ISO 1101
tolerances unless otherwise specified: angles 0°±1°; linear .0±.1
projection
mm
scale 3:2
product family: 8609
title: DIN STANDARD HEADER ANGLED SPILL DIN 41612 STYLE-C
dwg no: C-8609-2149
sheet 1 of 1
size: A3
type: Product Customer Drawing
sheet index: revision C; sheet 1

Copyright AFCI