Assembly Specifications	
Temp Rating	-20 to 80 C
Max Voltage	250V
Max Current	4A
IP Protection	IP 67
Length (L)	40in / 1017mm
Tolerance	+2.0in -2.0in

Wiring Schematic		
A Pin #	Conductor Color	B Pin #
1	Black	1
2	Red	2
3	Blue	3
4		4
5		5
6		6
7		7
8		8
Shield		Shield

Cable Specifications	
Cable Jacket	PUR
Cable OD	0.17in / 4.3mm
No./Gauge	M46C-322
Conductor Jacket	PVC
Shielding	No

A SIDE

B SIDE

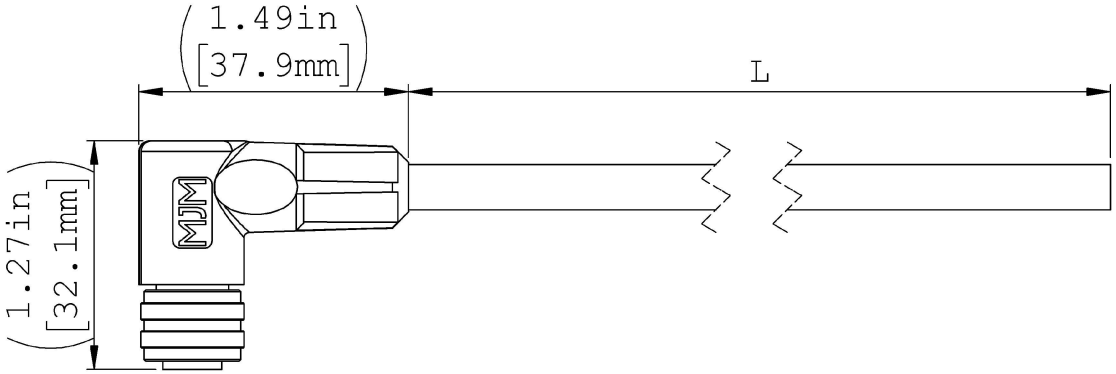

A Side Pin	B Side Pin
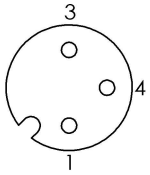	

Notes

1) Connector pin view is from front of connector
2) Not for interrupting current
3) Some options and features may not be shown
4) Aditional technical details available upon request; Consult Factory
5) Dimension in parentheses are for reference only

RoHS Compliant

Date Gen: 4/17/24

REV	BY	DATE	DESCRIPTION
0	MMG	01/04/22	Initial Release
1	MMG	03/16/22	Production Release

Tolerance Unless Otherwise Specified
0.00 = +/- 0.13
0.000 = +/- 0.050
ANGLES = +/- 5

Secondary Unit for Reference Only

MJM Industries
1200 East St, Fairport, OHIO 44077
PH:(440)350-1230 www.mjmindustries.com

Part Number:
M12A03F9-0040C-X01

Description:
M12 A Coded 3 Position Female 90 to Blunt Cut with 40in of PUR Cable