LEADED PRODUCT NUMBER	AS AVAILABLE
54111–XXX–XX–XXXX	

PRODUCT NUMBER
54111–XXXXXXXXXLF

PLATING

1 = 0.76µm GOLD/GXT ON CONTACT AREA
2µm MIN MATTE TIN ON TAIL
OVER 1.27µm Ni MIN

4 = 2µm MIN MATTE TIN
OVER 1.27µm Ni MIN

5 = 0.25µm GOLD/GXT ON CONTACT AREA
2µm MIN MATTE TIN ON TAIL
OVER 1.27µm Ni MIN
ONLY AVAILABLE UPON REQUEST

8 = 0.38µm GOLD/GXT ON CONTACT AREA
2µm MIN MATTE TIN ON TAIL
OVER 1.27µm Ni MIN

RoHS COMPATIBLE
SEE NOTE 8

STACK HEIGHT, NOTE 6

TOTAL NB OF POSITIONS
02 TO 36

OAL	PIN STYLE
12.2	01
13.5	02
15.9	03
16.56	15
16.76	04
17.65	05
18.91	06
20.50	28
20.96	07
22.40	19
23.5	08
26.04	09
26.42	14
28.00	18
28.58	10
30.48	20
31.12	11
32.15	21
32.80	29
33.66	12
34.00	13
36.20	16
37.30	22
38.40	23
42.30	24
43.00	25
47.00	26
52.00	27

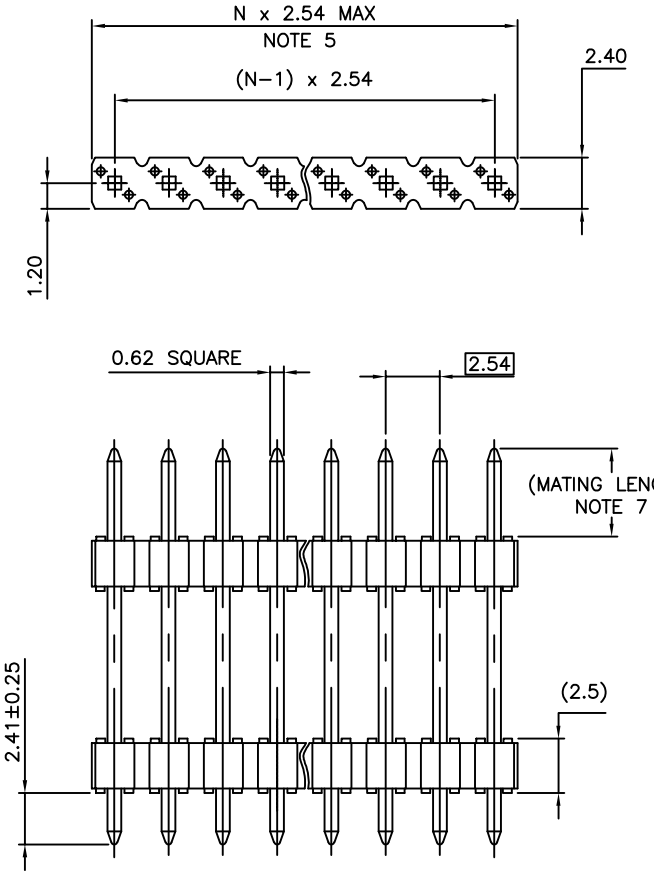

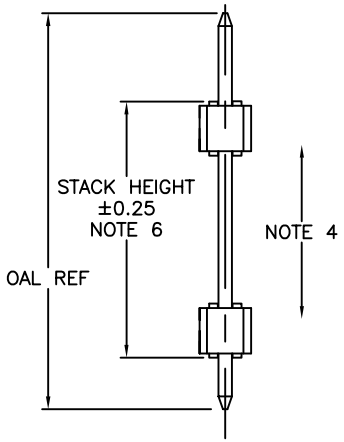

NOTES:

1. HOUSING MAT'L : HIGH TEMPERATURE THERMOPLASTIC. UL94V–0 COLOR: BLACK
2. PIN MATERIAL : PHOSPHOR BRONZE
3. STANDARD PACKAGING IN POLYBAG
4. 9N MIN RETENTION IN EITHER DIRECTION
5. TO DETERMINE DIMENSIONS :
   N = NUMBER OF POSITIONS PER ROW
   EXAMPLE : 8 POS PER ROW, N x 2.54 = 20.32mm
6. XXXX = MILLIMETERS
   5.0mm MIN TO 45.0mm MAX, IN 0.5mm INCREMENT
   EXAMPLE FOR STACK HEIGHT: 1 2 5 0 = 12.50mm
7. MATING LENGTH = (OAL)–(2.41)–(STACK HEIGHT)
8. RoHS COMPATIBLE PRODUCT SPECIFICATIONS
   a – PLATING:
   – "LF" MEANS THE PRODUCT IS LEAD–FREE, 2µm MINIMUM MATTE TIN OVER 1.27µm MINIMUM NICKEL UNDERPLATE.
   b – MANUFACTURING PROCESS COMPATIBILITY
   – THE HOUSING WILL WITHSTAND EXPOSURE TO 260°C ±5°C SOLDER BATH TEMPERATURE FOR 5 SECONDS IN A WAVE SOLDER APPLICATION WITH A 1.6mm MIN THICK CIRCUIT BOARD.
   c – LABELLING:
   – MEETS PACKAGING SPECS AS PER GS–14–920
   d – THIS PRODUCT MEETS EUROPEAN UNION DIRECTIVES AND OTHER COUNTRY REGULATIONS AS DESCRIBED IN GS–47–0004.

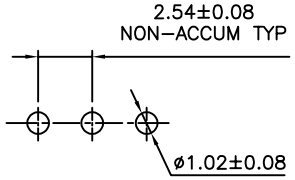

RECOMMENDED
HOLE PATTERN

ltr	ecn no	dr	date
H	B–17843	LMU	14.06.04
J	B–18962	LMU	14.09.29
K	B–19782	AMA	14.12.16
L	F–39083	LMU	20.11.24
M	F–47061	DDE	23.01.18
G	B–15645	LMU	13.02.14

dr	D.LE	01.01.24
engr	JM.C	01.01.24
chr	JM.C	01.01.24
appd	JF.N	01.01.24

mat'l. code: SEE NOTES
surface: ISO 1302
tolerance: ISO 406 ISO 1101
tolerances unless otherwise specified: angles; linear X.X ±0.3, X.XX ±0.13, X.XXX ±0.05
projection
mm
scale 4:1
product family: BERGSTIK
title: UNSHR. HEADER STR SR TMT
dwg no: 54111
sheet 1 of 1
size: A3
type: CUSTOMER Drawing
sheet index
revision sheet

FCIconnect.com
Copyright FCI