80/20® Inc.

CUSTOM ALUMINUM FRAMING SYSTEMS

PRODUCT CATALOG 23

REQUEST YOUR DEMO

Request a demo van visit and your local 80/20 distributor will come right to your door so that you can see and interact with profiles and accessories. The van transports a gurney with samples of aluminum profiles, fasteners, panels, and more so that you can start creating your custom solution.

CALL 260-248-8030 TODAY!

80/20

Quick Reference Guide to Catalog 23

What is 80/20	**2**
Made With 80/20 Stuff	**6**
Peace of Mind	**28**
Design Tools	**34**
80/20 Services	**36**
Ordering Information	**45**
Profiles	**49-198**
T-slotted Profiles	76
Ready Tube®	184
Quick Frame®	191
Fastening Methods	**199-442**
Internal Fasteners	213
External Fasteners	227
Variable Connectors	336
Hardware	364
Bolt Assemblies	407
Ready Tube® Connectors	419
Quick Frame® Connectors	425
Panels & Doors	**443-592**
Panel Types	452
Blocks, Brackets, Clamps & Retainers	473
Hinges & Roller Wheels	509
Handles & Latches	558
Floor to Frame	**593-654**
Casters & Leveling Feet	597
Base Plates	631
Add-On Components	**655-766**
Linear Motion	662
Linear Bearing Pads & Brake Kits	698
Dynamic Pivots	712
Pressure Manifolds	752
Gravity Rollers, Rods & Stoppers	762
Stanchions	**767-782**
Finishing Your Frame	**783-826**
Structural Shapes	**827-856**
Machining Services	**857-906**
Tools	**907-916**
Index	**917-960**

NAVIGATE CATALOG 23

1) Quick Reference Guide
Page one contains a table of contents.

2) Pictorial Overview
Each section begins with a visual product overview.

1515-UL Profile

Page 99

Anchor Fastener

Page 213

3) Part Number Index
Use this index (located at the back of the catalog) to find more information about a specific product.

Part No.	Page No.
1001	67, 79
1002	67, 81
1003	67, 83
1004	67, 85
1010	67, 77

4) Product Type Index
This index (located at the back of the catalog) provides information about product groups.

Part Description	Page No.
Anchor Fasteners	213-216
End Fasteners	218-220
45 Degree Supports	229-234
Flat Plates	235-240
Transition Plates	241-252

www.8020.net

80/20® Inc.

*The **Industrial** Erector Set®*

First and foremost, I'm sure you're wondering "What is 80/20?" Who are we, what do we sell, and what's our value. Simply stated, 80/20 is a T-slot aluminum construction system you can use to build virtually anything.

When you think of 80/20 think of an "erector set" for adults. You mix, match, assemble and reassemble our products to create your customized solution or innovation.

We go above and beyond selling parts and pieces; we offer an experience. 80/20 provides a one-stop shop for our customers.

We offer several services such as technical design assistance, custom machining, assembly services, and an in-house custom panel shop. 80/20 ensures that our customers can expect a high-quality product each and every time; consistency is a hallmark.

Why the Name 80/20?

In business, the 80/20 theory is a powerful tool. This theory is called Pareto's Law after Vilfredo Pareto (1843-1923), an Italian economist and sociologist who said that 80% of your results come from 20% of your efforts. We run our organization based upon this theory and everyone shares in the advantages.

T-SLOT ALUMINUM Vs WELDED STEEL

T-SLOT ALUMINUM	WELDED STEEL
WEIGHS LESS THAN STEEL	MORE TIME AND LABOR
COSTS LESS THAN STEEL	INCREASED EXPENSES
NO WELDING REQUIRED	WELDING REQUIRED
CORROSION RESISTANT	NEEDS PAINT & PRIMER
INTEGRATE COMPONENTS	FABRICATION REQUIRED
STRENGTH SIMILAR TO STEEL	MORE HAZARDOUS
MACHINING NOT REQUIRED	MACHINING REQUIRED
MODULAR DESIGN	ONE FIXED DESIGN

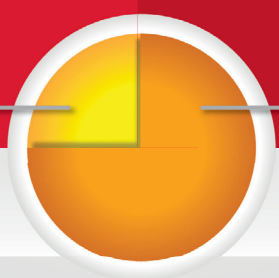

LABOR TIME: **0.5HRS**

LABOR TIME: **4HRS**

Driven By Our Culture of Unity

We've achieved growth by being continually focused on quality, innovation, and improvement. Our high level of quality is a result of our culture here at 80/20 which revolves around attitude.

At 80/20 we know that personal attitude is the one thing everybody can control. We hand-pick our employees and have found that those with a positive attitude thrive. Our culture just flat out doesn't tolerate a negative attitude.

This positive-attitude culture leads to empowerment of our people and a customer-driven vision. The lens through which we see the world and make business decisions is focused on our value to the customer.

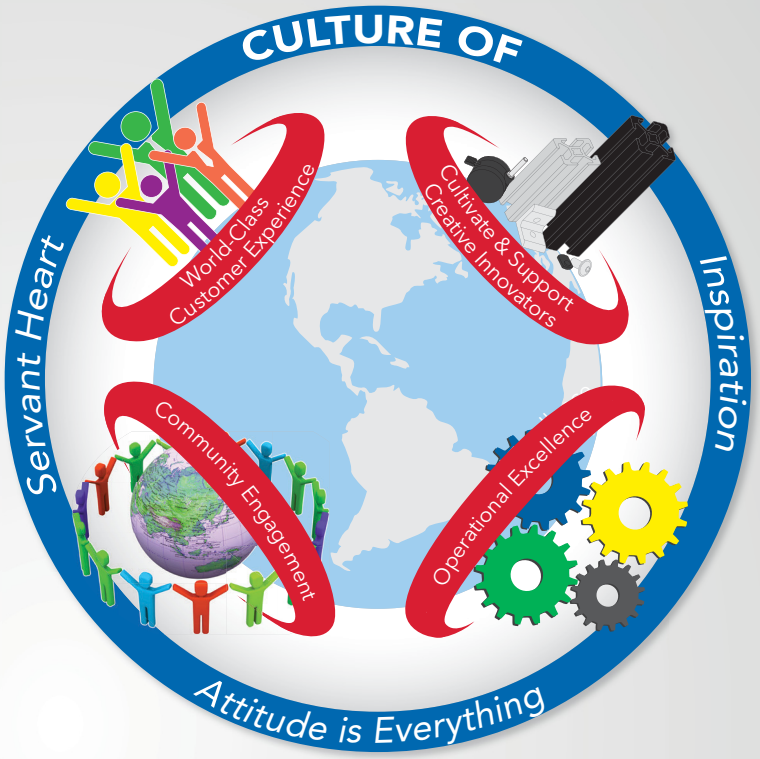

Letter From the Founder

80/20's success evolved from a blend of creative product innovations, a strong sense of our customers' needs, and an "ATTITUDE"!

The "80/20 ATTITUDE" is the cornerstone of our company. It is a reflection of our service to you, our customers, our decades of industry experience, and our willingness to do what it takes to get the job done.

There are a lot of things going on in this world that we cannot control. We cannot control gas prices, the decisions our government leaders make or the weather but we are in charge of our attitudes.

DON WOOD
FOUNDER

80/20® MISSION

Empower and encourage the designer and builder in all of us through:

- Cultivating and Supporting Creative Innovators
- Community Engagement
- Operational Excellence
- World-Class Customer Experience

80/20® VISION

Relentless pursuit to provide innovative modular building systems that inspire custom solutions.

We strive to develop and facilitate our building systems to construct virtually anything to be used virtually anywhere, while at the same time creating ways to share great ideas that encompass the limitless power of the human creative spirit.

Servant Heart

- The Golden Rule (treat others as you want to be treated)
- Empathic Listening
- Little acts of kindness make a big difference

Attitude is Everything

- Personal accountability – we have control over our attitudes

> "Life is 10% what happens to me and 90% how I react to it."
>
> **- Charles Swindoll**

Inspiration

- Agent of Change
- Empower and energize through continually seeking and supporting innovation
- Foster and encourage creative thinking

GUARDING & ENCLOSURES

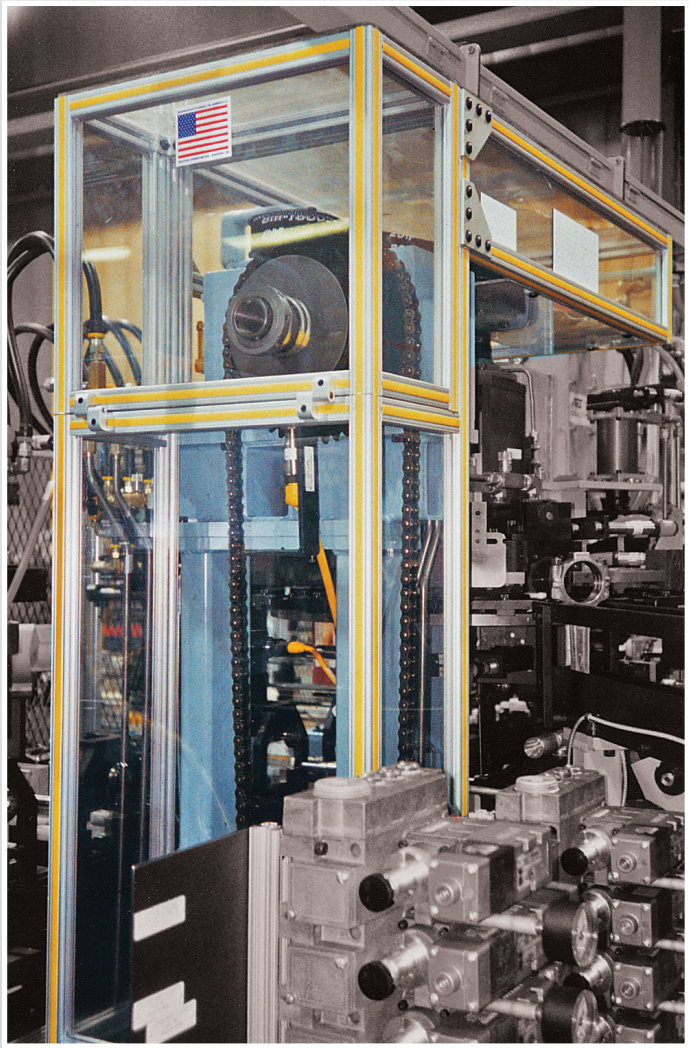

BEFORE

AFTER

Made with 80/20 Stuff

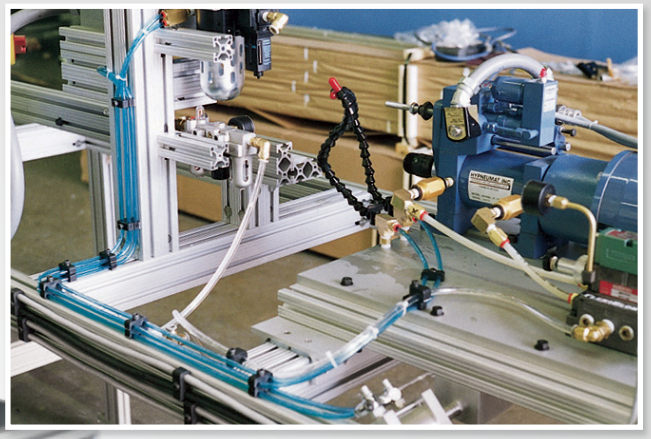

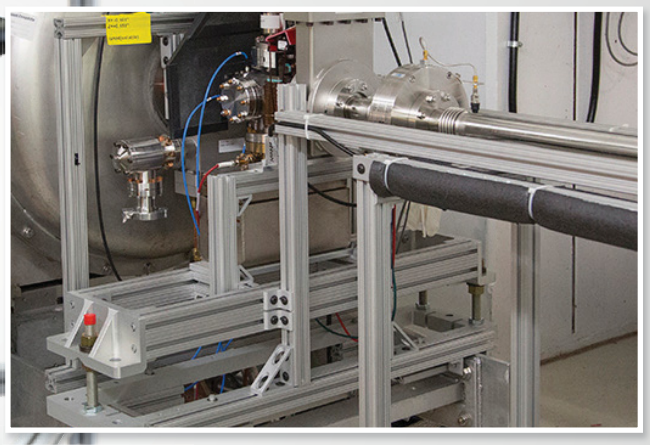

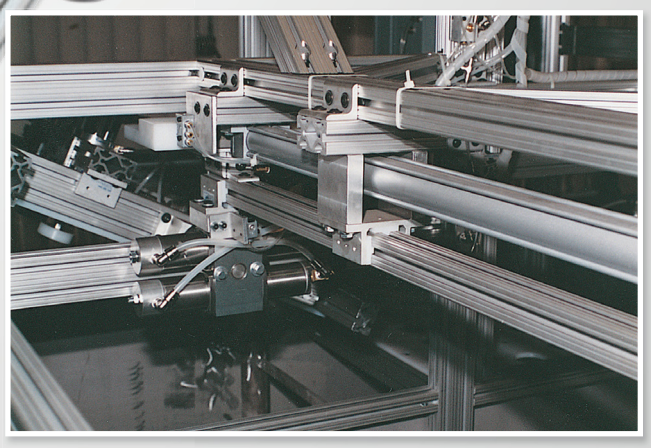

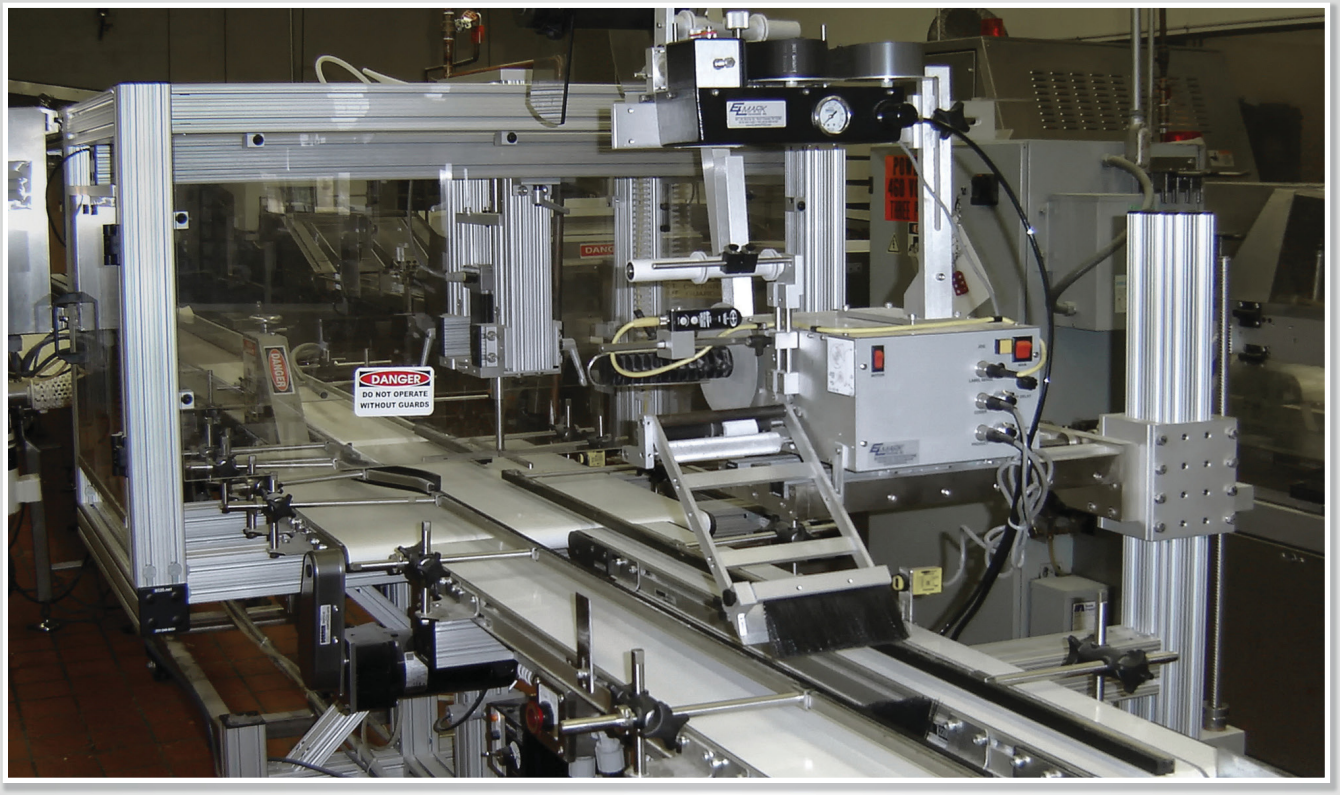

MACHINE FRAMES

Made with 80/20 Stuff

MATERIAL HANDLING

Aimco
CAP. 215 lbs.

WORKSTATIONS

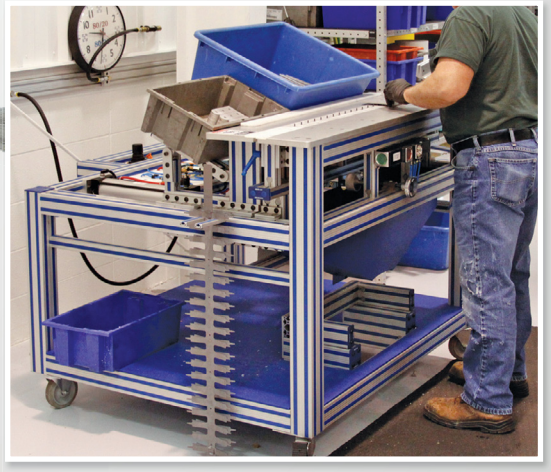

MOBILE

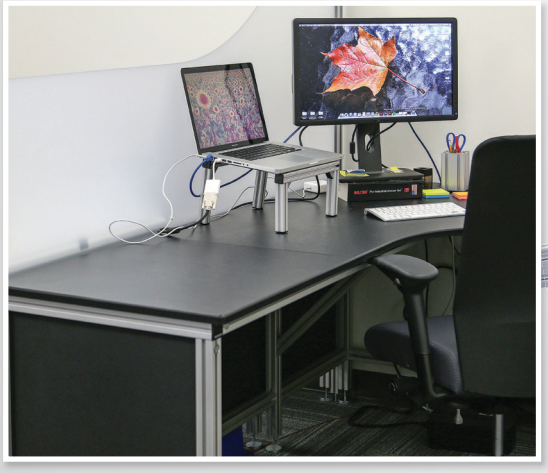

STATIONARY

ROBOTICS & LABS

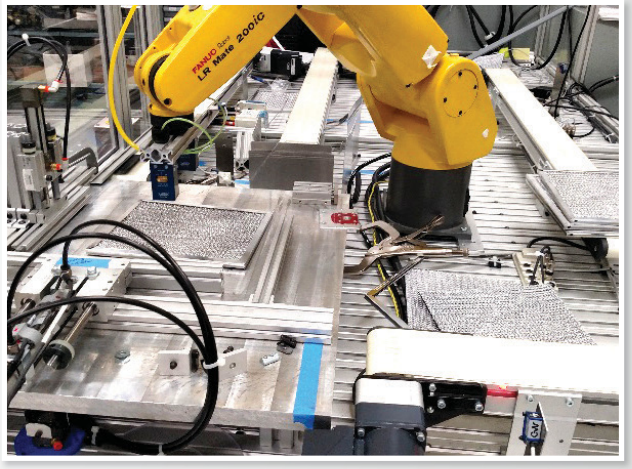

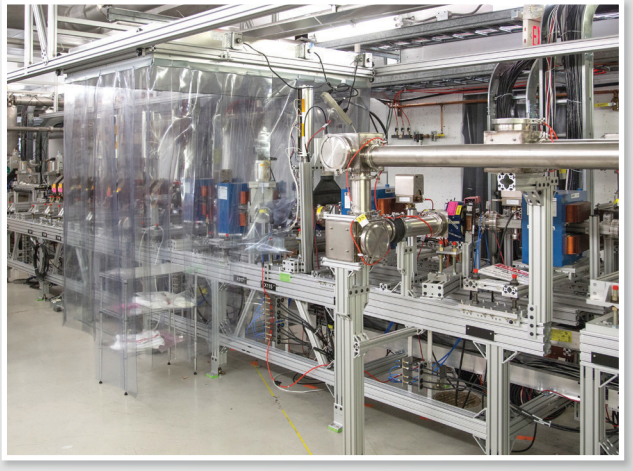

Made with 80/20 Stuff

At ArcLight
BOLLYWOOD
inning August 19th
Twenty years. Two people...
ne Day
Hathaway/Jim Sturgess

2000 FIA GT CHAMPION
JULIAN BAILEY
2000 BRITISH TOURING CAR CHAMPION
ALAIN MENU
2000 FIA N-GT ISTO CHAMPION
CHRISTOPHE BOUCHUT
Silkon

81
Virgin
DUNLOP

Music
GRAMMY

Made with 80/20 Stuff

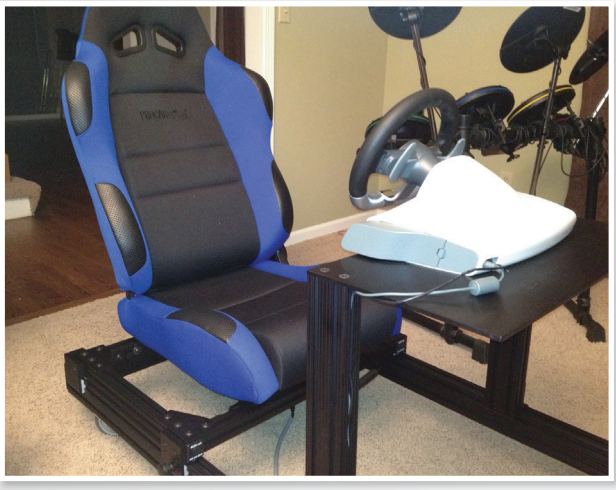

BLACK ANODIZE

AUTOMATION

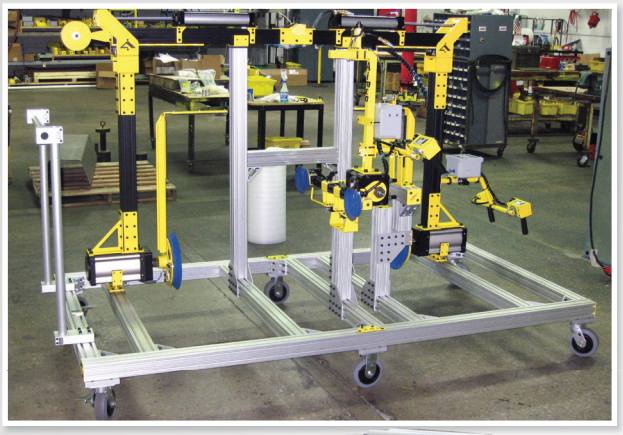

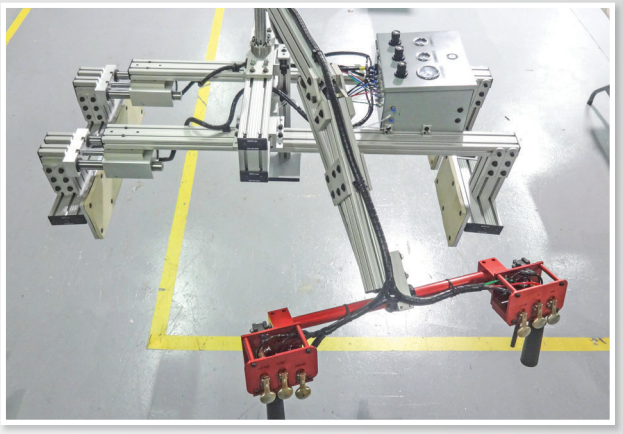

Made with 80/20 Stuff

FACILITIES

Made with 80/20 Stuff

DO-IT-YOURSELF

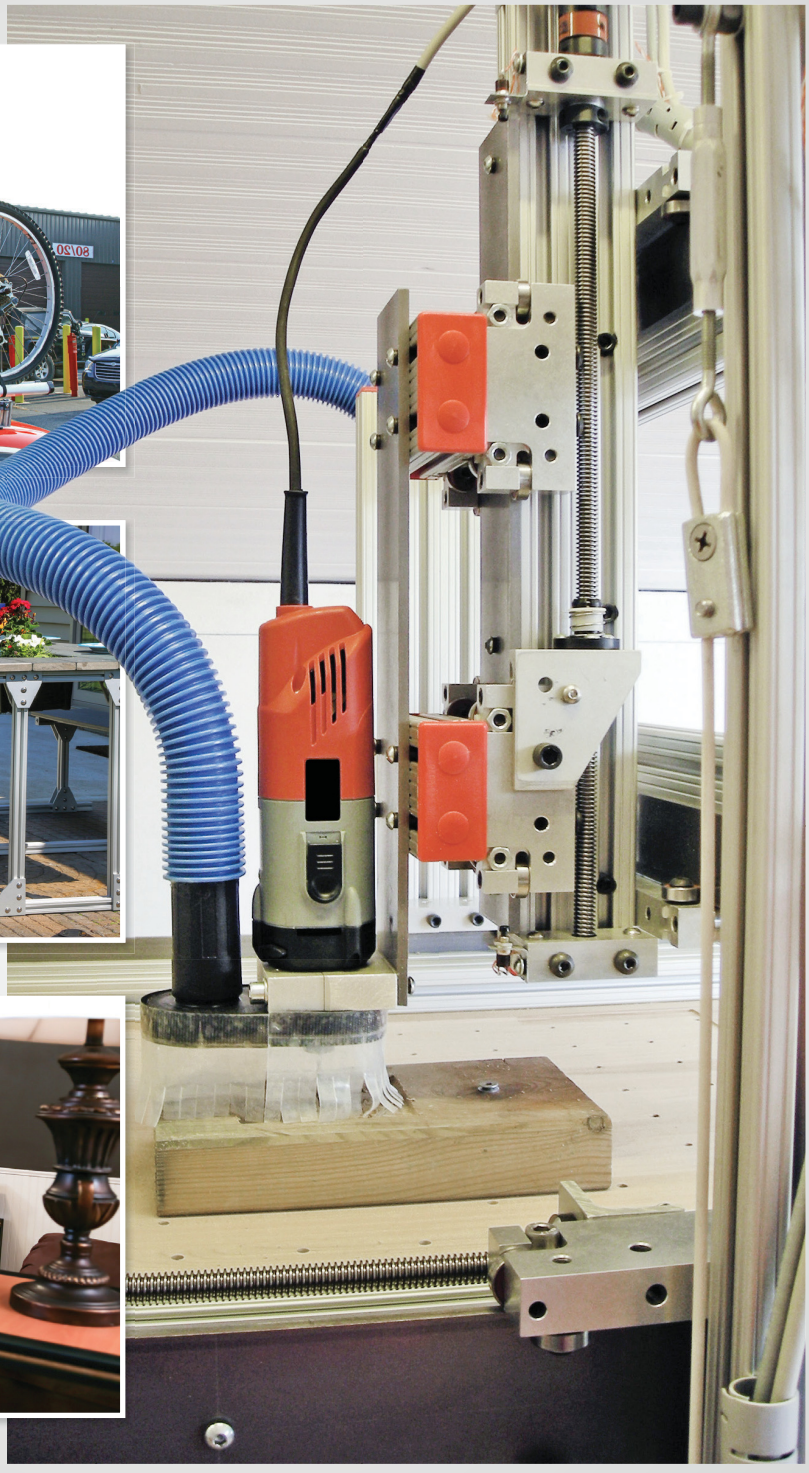

Made with 80/20 Stuff

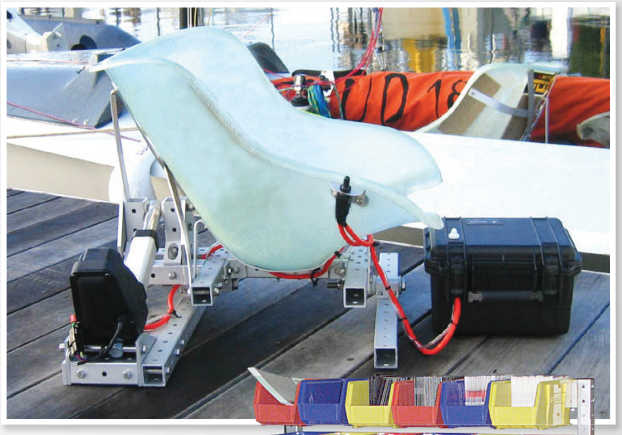

Ready Tube®

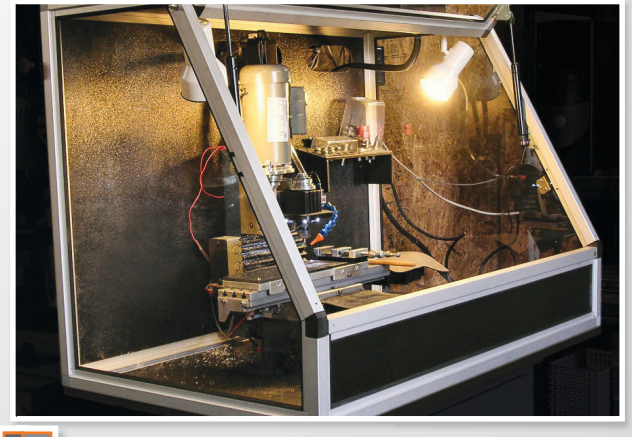

Quick Frame®

Peace of Mind

What Can You Expect With 80/20's Peace of Mind?

We want you to know exactly what you can expect when partnering with 80/20. Our philosophy is to provide you with peace of mind; every day we strive to meet and exceed your expectations. Browse through the following pages for more details about these topics.

- **ONE-STOP-SHOP** – Avoid the hassles and inefficiencies of multiple vendors. With 80/20 you have it all in one place. See page 30 for more details.
- **LOCAL DISTRIBUTORS** – You will receive extensive field support through the 80/20 distributor network. On-site project evaluations, technical support, and demonstrations are just a phone call away. For more details see page 32.
- **DESIGN ASSISTANCE** – When you need help taking your project beyond a sketch 80/20 provides design assistance. Send us your drawing and dimensions and we'll get you started. For more details see page 33.
- **FREE AUTOMATED SOFTWARE** - You have a range of software options to choose from to make designing with 80/20 easy. Visit pages 34-35.
- **FREE DRAWING FILES** - Integrate 80/20 product into your existing design. Choose from 3D, 2D, and more for most design programs. Download drawing files at www.8020.net. Visit pages 34-35.
- **80/20 BUILDS** - Let seasoned builders construct your project for you. Get all the details on page 36.
- **CUSTOM MACHINING** - When you need a unique part take advantage of our Custom Machining service. We can machine any part or piece from the 80/20 catalog or beyond to help fit your needs. Additional details on page 38.
- **CUSTOM PACKAGING** - When you need something beyond 80/20's standard packing for your order, we offer a custom packaging service to accommodate your more detailed and specific requirements. See page 44.
- **NO MINIMUM ORDERS** - If you need it, we'll ship it. We appreciate all of your business, even the small orders.
- **LARGEST PRODUCT OFFERING IN THE BUSINESS!**
- **YOU ARE THE BOSS – WE SERVE YOU!**

Peace of mind means you have a partner in creating your project….from concept to design to completion.

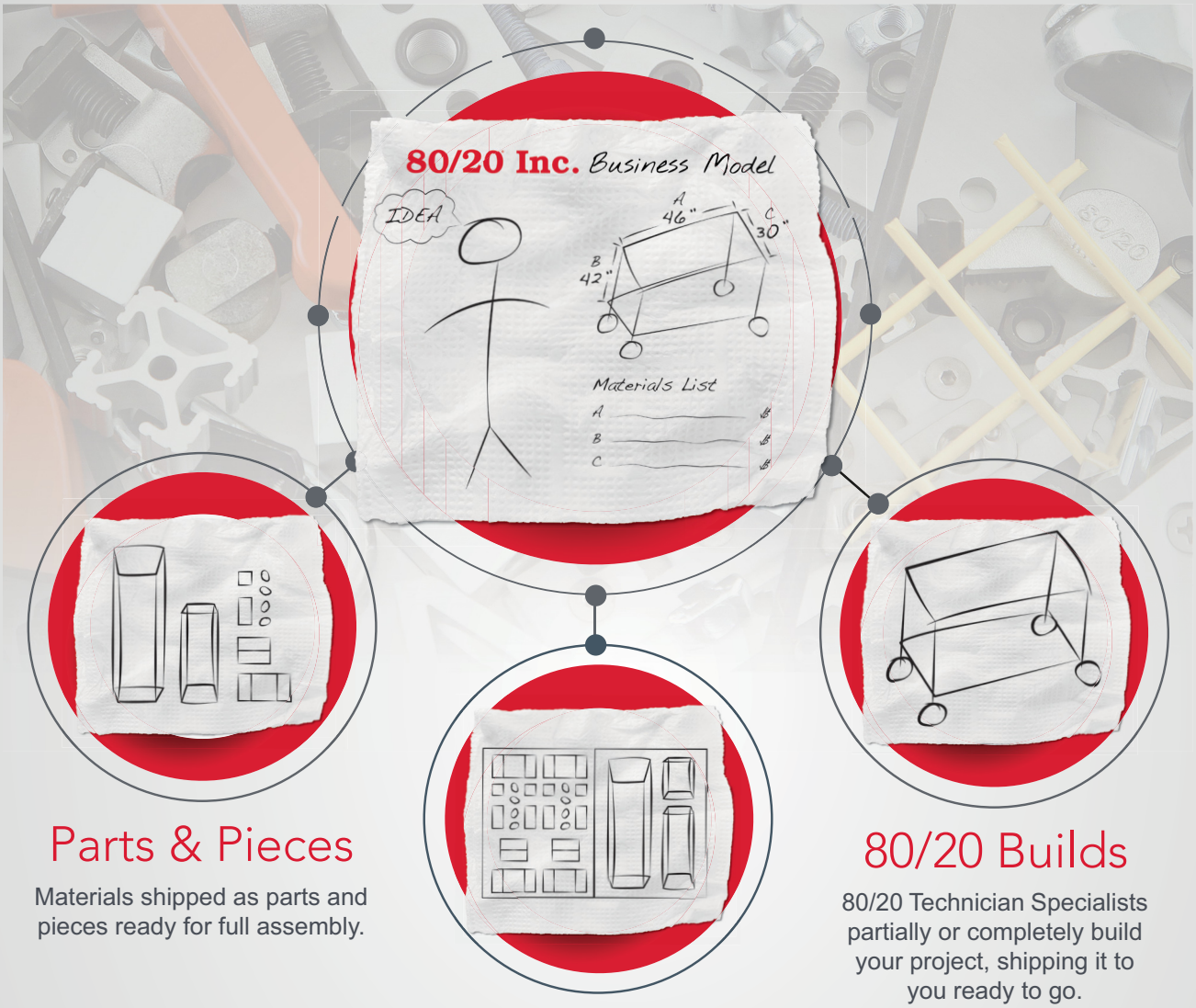

Parts & Pieces

Materials shipped as parts and pieces ready for full assembly.

Kit Form

Materials packaged as a kit(s) and ready for easy assembly.

80/20 Builds

80/20 Technician Specialists partially or completely build your project, shipping it to you ready to go.

Need Help Getting Started?

Get a quote from the 80/20 Design Assistance team. Call 260-248-8030 today and turn your idea into a real world solution!

Peace of Mind

One-Stop-Shop

80/20 One-Stop-Shopping means you get convenient and efficient products and solutions, as well as the services to augment your order, all in one place. Save the time, hassle, and headache that come from working with multiple vendors.

Our commitment to being your one-stop-shop means that we have no minimum orders; we want ALL of your business. We know that your project is unique and that you need the flexibility to order in small or large quantities.

It also means we listen to your needs and continually add to our stock of products. We already have the largest product offering in the industry and it's only going to continue to grow! Our products are customer-driven and always expanding. And if it's something we don't currently carry, we'll source it for you.

In order to make your 80/20 experience simple and straightforward we have in-house capabilities to support our dedication to being your one-stop-shop. These are top-of-the-line machine shops and services that produce at the same level of quality you can expect with anything 80/20. These valuable resources are at your disposal to streamline your processes and save you time.

Call one of our Design Technicians today about making 80/20 your one-stop-shop

The 80/20 Difference

We know how frustrating it is when that order you placed arrives damaged, with incorrect parts, or in poor quality. At 80/20 we set high standards for each and every process to make sure you never experience this disappointment with any 80/20 shipment.

At 80/20 we go the extra mile to ensure you get the product you want how you want it. We adhere to rigorous quality checks throughout the entire product lifecycle. This 80/20 difference means that on every order, your parts will be cleaned, and individually packed by type. Hardware and parts will be clearly labeled and packaged with appropriate measures for safe transit.

For orders that you need segmented into kits or bundles, that's not a problem. Receiving your shipment in kit form is especially useful for instances where you have multiple quantities of the same project, allowing for easy organization and setup.

If you are ordering large quantities, our bundling service packages similar products together. For instance, all of your bars will be packed together and all of your panels packed together. As with all orders, they will be clearly labeled. Bundled orders typically have lower freight costs due to their consolidated nature.

When you have an order with specific packing requirements, we can accommodate.

Visit our Custom Packaging page for more information on special packing and labeling services.

Ongoing Support

Your 80/20 support doesn't end when you receive your order. If you have questions or need assembly advice or suggestions, we've got you covered. Our dedication to providing you quality products and services is all-inclusive; we want to partner with you on your entire solution.

You also have access to an extensive network of local distributors able to assist with on-site needs or product information. These knowledgeable specialists work with you to make sure you're completely satisfied with your 80/20 products.

On the off chance that your order isn't exactly what you expected, we'll make your return simple and painless and expedite the fulfillment of a replacement. Visit our return policy on page 46 and you can always speak to a representative to work through the process with you.

Peace of Mind

Customer Support

It's important that you get the information, assistance and answers you need when you need them. You don't want to spend time navigating through a stream of prompts or being passed from one person to another.

At 80/20 our phone is answered by a live person who will quickly direct you to the right person. Our hours of operation are from 7:00 a.m. to 5:30 p.m. ET and if you need after-hours assistance we have personnel available.

If you prefer the convenience of online assistance we offer live chat sessions to accommodate your schedule and provide interactive support. You can expect prompt responses and useful information.

From product questions to order tracking or design assistance, we have an extensive network of support specialists ready to help through a variety of communication channels. Whether you prefer email, phone, or live chats, you'll work with knowledgeable and experienced personnel to get the dedicated attention and information you need in a quick, concise manner.

Contact a Representative today for product information, design assistance, order tracking, or any other questions you may have.

Local Distributor Network

80/20 has an extensive network of local distributors to serve your full-cycle needs. These specialists provide a range of services from on-site demonstrations and evaluations to after-order assistance.

Your local distributor is there for you throughout every stage of the 80/20 experience. Even before you begin designing your solution, technicians can visit your business to provide a review of your equipment and processes. You'll find that distributors have "80/20 eyes." They can see places and procedures where 80/20 products and services will help speed up product lifecycles, cut your costs, or create synergies.

Local distributors are also available for recommendations on integrating 80/20 with your current equipment and resources. 80/20 partners with distributors focused on a robust line card able to serve a diverse industry base and accommodate your total-project requirements.

Online Assistance

Distributor Lookup

Use the Distributor Lookup tool to find your local 80/20 partner. Visit 8020.net/distributor-support

Design Assistance: From Concept to Completion

We have highly skilled Design Technicians on-staff to provide you a custom quote and offer optimization recommendations. These experienced technicians will see your solution through from idea to production. We'll help you save costs by finding the best, most economical option to get the job done.

Our technicians have a great eye for detail and take the time to review your design for accuracy. We'll work with you to address your requirements.

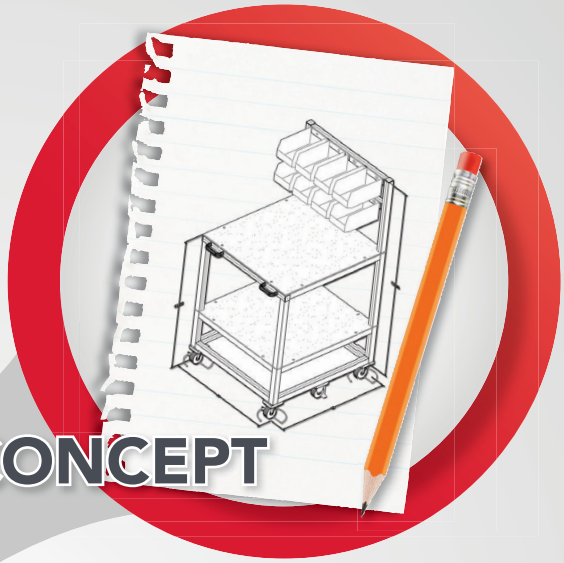

Local Assistance

Our local distributors are also available through an extensive network for added support. 80/20 distributors are the most knowledgeable and experienced in the industry.

No Project Too Big or Too Small

There are no size limits on what we will quote. No design is too big or too small; we appreciate all of your business and want to work with you on any project.

Online Design Assistance Tool

Our online tool makes it fast and straight-forward to submit your request for design assistance. Simply fill out the preliminary design sheet and, if applicable, upload your drawing(s).

For additional details or to use the Online Design Assistance Tool visit our website at www.8020.net.

Free Design Tools

80/20 offers several free tools, libraries, and drawing files to make it easy for you to design and enhance your 80/20 project. This variety of resources also make it simple for you to integrate 80/20 products into existing designs. Be sure to check out our YouTube site for helpful hints as well as tips and tricks videos.

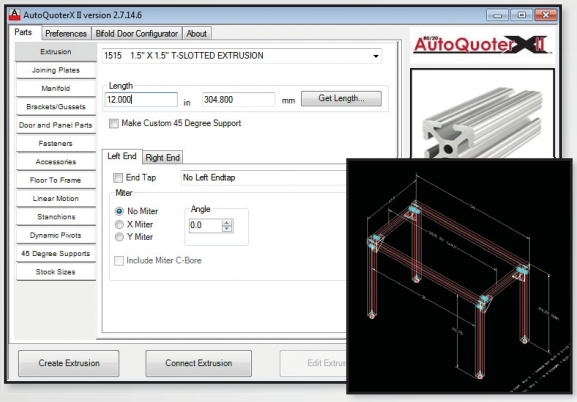

80/20 AutoQuoterX II®

AutoQuoterX® II is used in conjunction with versions of AutoCAD® software for optimum design capabilities. It is free and can be downloaded from our website. This plugin features an easy-to-use interface to streamline the design process and generate a detailed bill of materials. We are continually updating and enhancing AutoQuoterX® II tools and resources.

80/20® Inc. Tech Toolkit™

Tech Toolkit™ offers bundled design tools to provide guidance and speed up design time. These tools will help specify the profiles that work best for your application. Use the built-in conversion calculator to cross-reference calculations. There is also an online deflection calculator at 8020.net for beam deflection, as well as a miter cut worksheet to assist in creating drawings, analyzing real-life limits, and more.

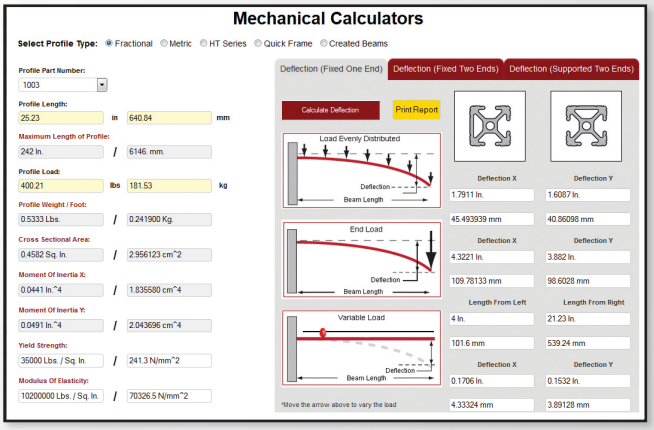

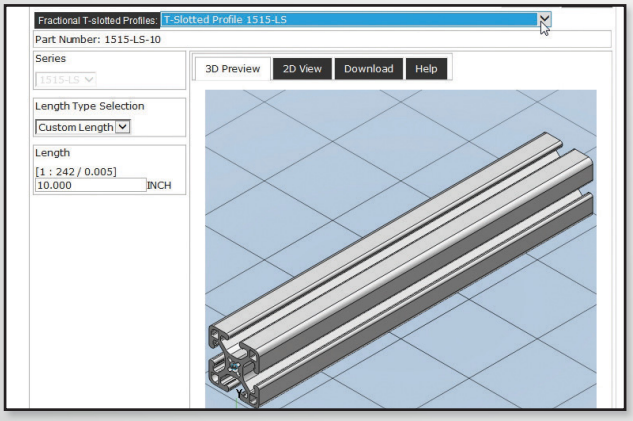

80/20 PART SOURCE™

CAD File Library Powered By PARTsolutions®

80/20's PartSource® is a CAD library powered by PARTSolutions® and is accessible directly from our website. It includes design files for parts and profiles. Products are available in both 2D and 3D file types, supporting a variety of CAD packages. Users of Inventor® also have the added benefit of a direct link to PARTSolutions®. These design files are also available at 8020.net on each product page.

SolidWorks® 2012 - Dynamic Library

The 80/20 SolidWorks® Dynamic Library is a free single download of thousands of parts, including profiles, fasteners and accessories, as well as profile weldments. This simple download makes it easier for you to design, test, and experiment with your builds. We are continually adding drawing files, so be sure to check for updates at 8020.net.

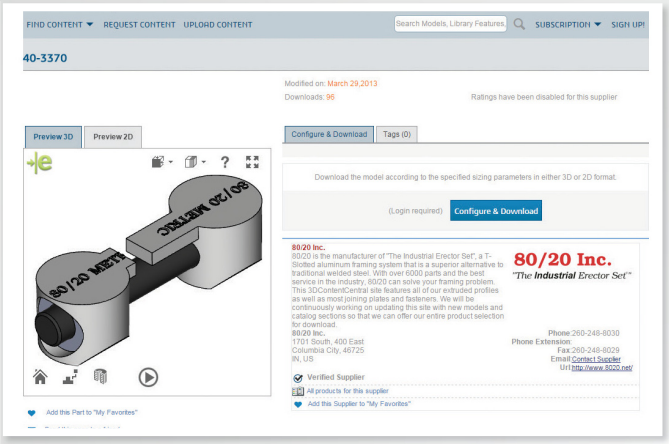

3D CONTENTCENTRAL

3D Content Central® provides easy to find 2D and 3D file types for 80/20 profiles, fasteners and accessories. The files support a wide range of CAD packages. Users of SolidWorks® have the added benefit of a direct link to 3D Content Central.

CAD DIRECT

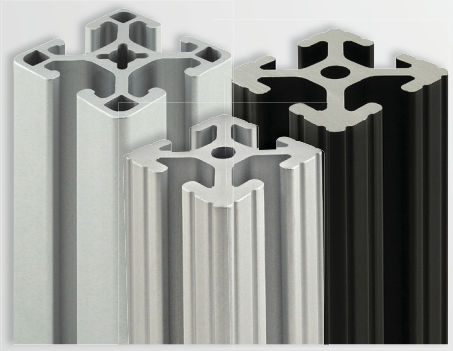

Free Streamlined Files

80/20 offers free streamlined files for T-slot, Ready Tube® and Quick Frame® profiles. Each profile series is downloadable in its own convenient file. The files are available in:

- **AutoCAD® - DXF – 2D**
- **SolidWorks® 2013 – SLDPRT**
- **Inventor® - IPT File Format**
- **SketchUp – SKP File Format**

Visit 8020.net to use all of 80/20's design tools!

80/20® Services

80/20 BUILDS

Time is critical in today's fast-paced world. 80/20 Builds assembly service gives you more time to focus on what you do best. We'll take your project from the design stage all the way through to completion, including the actual assembly.

It stands to reason that, on average, we can assemble your project in about a quarter of the time it takes someone who doesn't build with 80/20 day in and day out. Consider all the other projects and tasks that can be done in that time!

1 HOUR 80/20 BUILDER

80/20's experience with the product along with our specialized tools and large work area enable us to be the fastest and most efficient at building with 80/20.

4 YOUR TIME

We know there are occasions when space, personnel, or time constraints make it difficult to devote resources to assembling a project.

ADVANTAGE OF THE 80/20 EXPERIENCE

The 80/20 Builds service was created to help you increase your productivity. We have a team comprised of dedicated and experienced technicians who optimize designs, build projects and ship them safely and damage-free. Our tools and resources ensure precise assembly to your exact specifications.

THREE SERVICE OPTIONS

You have three service options to choose from with 80/20 Builds: preloading, subassembly, or full assembly.

PRELOADING

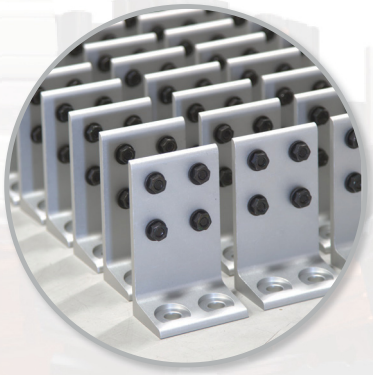

We prep your fasteners and plates with the required hardware for quick installation.

SUBASSEMBLY

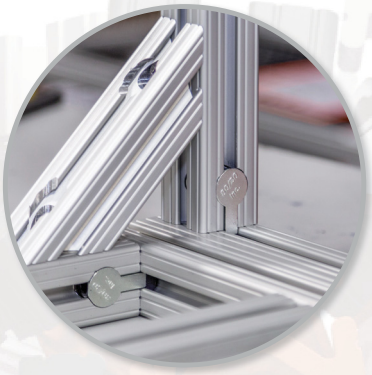

We build your project into segments that can be easily and quickly assembled later.

FULL ASSEMBLY

Your project is completely built, shipped, and ready to use when it arrives at your door.

CUSTOM MACHINING

Our Custom Machine shop is another way 80/20 provides your solution from concept to creation. This in-house service means we can be your one-stop-shop for T-slot systems as well as custom parts, accessories, and attachments to complete your entire project.

Our precision in-house Custom Machine shop quickly makes adjustments or changes to any part in our catalog, saving you the headache involved in outsourcing these services. We can also make an entirely new piece completely customized for your needs. And if it's not a material we carry, we'll source it for you.

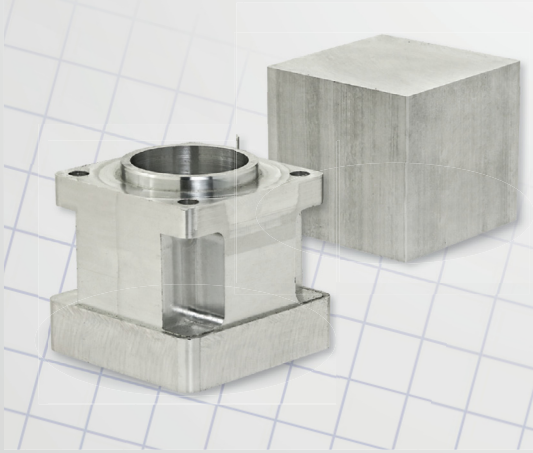

VAST STOCK OF PARTS

We offer over 200 in-stock structural shapes; 80/20 will make the custom bracket or mount you need to augment your order. Don't waste time and energy working with multiple vendors. We have the materials, personnel and equipment to provide your products with a quick turnaround and the high level of quality that comes with all 80/20 products and services.

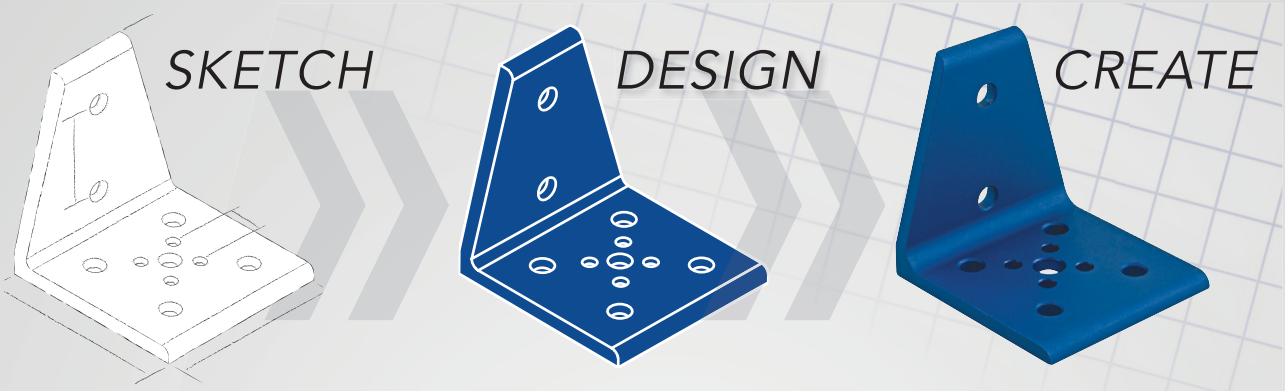

NO PART TOO BIG OR TOO SMALL

We specialize in custom-machining aluminum; there are no minimum charges and no minimum runs. Our state-of-the-art equipment is set up for single parts or large quantities, all to the tightest of tolerances.

Contact a Design Technician today at 260.248.8030 for assistance with your Custom Machining project.

DID YOU KNOW?

Every year, 80/20 machines over 100,000 custom parts, panels and aluminum profiles.

PANEL SHOP

80/20's in-house Panel Machine Shop is a service that provides you the total solution for your project needs. We stock a selection of over 100 varieties of plastic panels, aluminum plates, and wire mesh with thicknesses ranging up to half an inch. This huge supply means you won't have to wait on material or the machining; we do it all in one location.

We machine our panels in-house, saving you valuable time and money; you'll get your project fast and to your exact requirements.

VARIETY OF PANEL TYPES

- Acrylic
- Polycarbonate
- PVC/Acrylic
- HDPE Pegboard
- Aluminum Composite
- Lite Aluminum Composite
- Expanded Metal
- Wire Mesh
- HDPE
- ESD
- AR Polycarbonate
- Recycled Polycarbonate
- Solid Aluminum Plate
- Diamond Tread Plate
- Laminated Tabletop
- Twin Wall Polycarbonate
- Expanded PVC
- Phenolic Resin
- ABS Haircell
- Thermoplastic Coated Wire Mesh

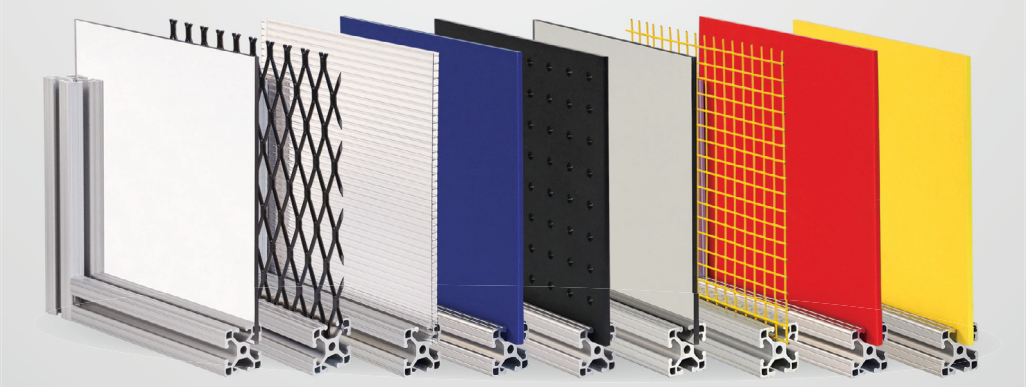

CUSTOMIZE YOUR PANEL

We have the equipment to take your design and create the custom shape, access point, door, or barrier your project may require. The results of this extensive in-house shop are finalized materials that are seamlessly incorporated into your application.

This is accomplished at the high level of quality we hold ourselves accountable to in all of our products and services. From the initial design stages through our hand-packing procedures, you'll receive your panel just as you ordered it and expect it – to your specifications and damage free.

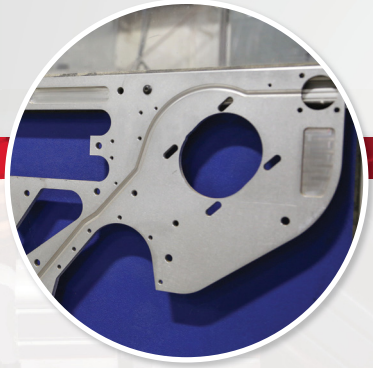

PANEL SHOP MACHINING

- Cut to Size
- Custom Designs
- Engraving
- Lettering
- Recessing
- Perforating
- Notch for Hardware
- Much More!

METAL FINISHING

Our in-house metal finishing capability is one of the several ways 80/20 is committed to being your one-stop-shop for T-slot projects. This service encompasses a range of options to provide you with fast turn times and consistent, high-quality, products.

Our standard finishing process here at 80/20 begins with the raw aluminum product; we machine the part, vibratory finish and/or sand it (depending on the item), and then move it into the anodize finishing process. It's worth noting that 80/20 is one of the only T-slot providers in the industry with in-house anodizing capabilities.

ALTERNATIVE PRODUCT FINISHES

We have invested in the resources to provide a high-quality product in a timely manner. Our metal finishing shop consists of dedicated personnel, equipment and space.

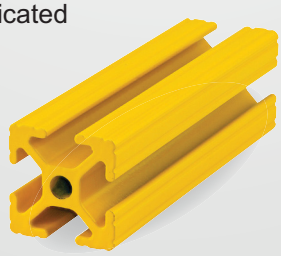

And we know that there are times you need an alternative finish for your product. Talk to a technician today; we also offer a range of special finishes from powder coating to electroplating and beyond.

FINISHING OPTIONS

- Mill
- Anodize
- Blasted
- Chromate
- Zinc Plating
- Powder Coat
- Electroplating

STANDARD MACHINING

80/20 has a wide range of standard machining services. These are cuts, drills and bores we make hundreds of times a day to your precise specifications. We have invested in top-of-the-line equipment and personnel to create a streamlined process for machining your products fast and accurately.

We have this down to a science; our large selection of standard machining services applies to all of our profiles, fasteners and accessories. We even have panel, wire mesh, and aluminum plate machining capabilities. This means high-quality, accurate products coupled with fast turn times.

DID YOU KNOW?

80/20 has over 500 standard machining services available to provide fast turn times.

CAPABILITIES FOR ALL SIZES

If you need one or one hundred parts machined, we have the capabilities to accommodate. Our equipment ensures precise cuts and drills so you receive your order just as you designed it. What's more, each part is visually inspected and measured for proper location and sizing of machining services.

CUSTOM PACKAGING

When you need something beyond 80/20's standard packing for your order, we offer a custom packaging service. This service accommodates your more detailed and specific requirements. From bubble wrapping each profile, using unmarked boxes or labeling parts per your special instructions, we will work with you to fulfill your packing needs.

FOR YOUR SPECIFIC NEEDS

A popular option is our part-tagging service. This is ideal for orders with several bars of varying lengths or different machining services, or for large quantities that you need labeled alphanumerically to match the bill of materials. The parts will be separated and packaged together by type and the labels will be clear and easy to read.

As with all 80/20 orders, our packing is to the highest of standards. No matter the unique details of your requirements, your shipment will be properly hand-packaged to ensure a damage-free delivery.

POPULAR CUSTOM PACKAGE OPTIONS

- Part-Tagging
- Bubble Wrapping
- Individual Part Packing
- Unmarked Boxes
- Kit Packaging
- Bar Coding

Shipping Schedule

Our standard shipping time is the best in the T-slotted profile business.

Consider the following when deciding whether to buy pre-cut or full length profiles:

- **Freight costs and delivery schedules**

Packages longer than 100" must ship via commercial carrier. Any package 100" or shorter can ship via UPS, which is usually substantially less expensive and has faster delivery schedules than commercial trucking.

- **Quality cuts and accurate lengths**

When you purchase pre-cut profiles, you can expect to receive quality cuts and accurate lengths, washed and packed for shipping.

- **80/20® is centrally located for convenient UPS delivery from coast to coast**

Shipping Rate Information:

Most carrier rates are calculated based on weight. However, since most trailers reach their volume capacity before their weight limit, the important factor is the volume of the shipment. Standard rate classifications for 80/20® packaged profiles and panels start at rate class 60. This classification may vary due to the finished package size.

Aluminum Profile:
Freight Rate Classification: ≥ 60
Bill of Lading Description: aluminum profiles and parts

Plastic Panels:
Freight Rate Classification: ≥ 85
Bill of Lading Description: laminates in sheets

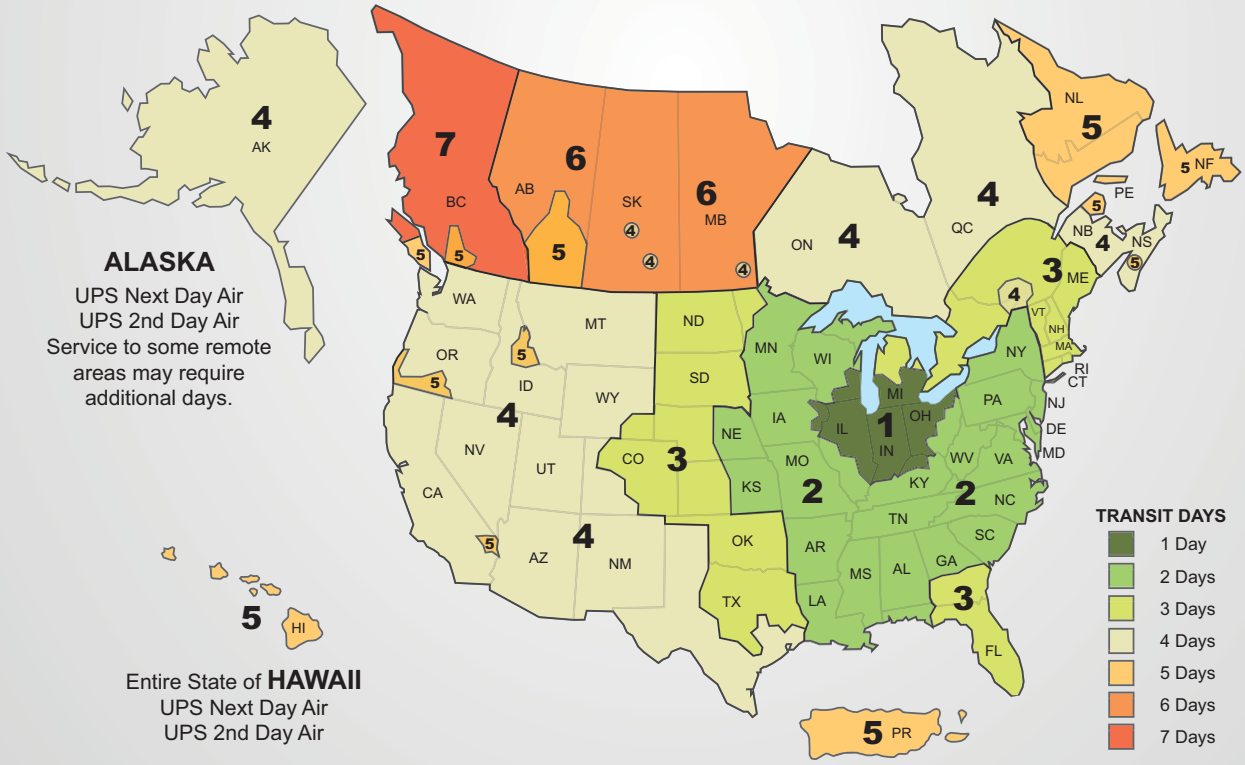

Ordering Information

Shipping Schedule

You need communication, commitment and timely delivery of your orders. Superior quality, customer service, and fast shipping are the foundation of our business so **we will always strive to ship your orders in less than our published timeframes.** Assuming that your order is ready for processing (including all drawings and worksheets) the shipping schedule chart outlines when you can expect your order to be shipped.

Order Type	In-House Processing Days
• Parts Only	2-4
• Cut to length T-slotted profiles (with or without parts) • Cut to length mill-finish structural shapes	2-4
• Parts, panels, and T-slotted profiles with standard machining in addition to cuts	7-9

These shipping times are for standard clear anodize orders. For the complete shipping schedule, including black anodize orders, visit 8020.net/shipping-information.

Preferred Carriers

To ensure timely and safe delivery of your products 80/20 works with preferred carriers. These carriers understand and have committed to our high level of quality and customer service. They make daily scheduled pick-ups. If you have a transportation company you prefer to use and they are not on this list, we will work with you to accommodate.

Less-Than-Truckload (LTL) Carriers:

- UPS Freight
- YRC Freight
- Old Dominion
- ABF Freight
- Conway (XPO)

Parcel Carriers:

- UPS Ground
- FedEx Ground
- FedEx Express

Damaged or Lost Shipments

UPS and Prepaid Truck Shipments:

Check your order immediately upon receipt. All damages must be noted on the packing slip and bill of lading. All shipping discrepancies must be reported to 80/20 Inc. within 14 days of receipt of your order. Keep all damaged goods for inspection.

Truck or Expedited Freight (when you select the carrier):

Check your order immediately upon receipt. All damages must be noted on the packing slip and bill of lading. All shipping damages, discrepancies and shortages must be reported to the carrier you selected within 7 days of receipt of your order. Keep all damaged containers and goods for your carrier to inspect. File your claim with your carrier for the damages at that time.

Return Policy

1. Contact your 80/20 distributor or 80/20 Inc. for an RGA (Returned Goods Authorization) packaging form.

2. Write the RGA number on the packing list AND shipping label of your return carton. Full credit is given for undamaged, unused stock parts.

3. Carefully wrap and pack all parts you're returning to prevent damage (and possible credit refusal) during shipping.

Terms and Conditions of Sale

1. ORDER PLACEMENT. All goods and services furnished by 80/20, Inc. ("80/20") are provided pursuant to these Terms and Conditions ("Terms and Conditions") whether provided following an order placed electronically, verbally, or on paper, whether the order is placed directly through 80/20 or through an 80/20 representative, and whether the order is placed following Buyer's review of 80/20's catalog or website, or following receipt of a Quotation only, or following the exchange of other documents (the catalog website Quotation and all other documents, hereafter, jointly, the "Quotation"). Acceptance by 80/20 of Buyer's order is expressly conditioned upon Buyer's acceptance of these Terms and Conditions, including those on the face of the Quotation, and any provisions of Buyer's order in conflict with these Terms and Conditions are expressly rejected. Buyer acknowledges that no representation or warranty other than those contained in this document have been made or relied upon. No additions or modifications shall be valid unless confirmed in writing by 80/20. 80/20 IS NOT BOUND TO FURNISH ITS GOODS OR SERVICES EXCEPT IN ACCORDANCE WITH THESE TERMS AND CONDITIONS.

2. PRICE/DELIVERY/DELAY. Prices for goods shall be those in effect on the date of invoice unless otherwise provided by the Quotation or agreed to in writing by 80/20. Unless otherwise provided on the face of the Quotation or agreed by 80/20 in writing, price and delivery terms shall be F.O.B. shipping point. Unless otherwise agreed in writing, 80/20 will select the route and manner of shipment, reserves the right to make delivery in installments when necessary, to invoice each installment separately, and to expect payment for each installment within 80/20's selling terms. All risks of loss or damage shall pass to Buyer at the place and time such goods are placed into the possession of the carrier or shipper, in accordance with the previously referenced F.O.B. shipping point term. Buyer shall be responsible for obtaining and paying for insurance to cover any loss to Buyer. Buyer shall pay 80/20 for the contract price in the event of loss of the goods. If Buyer fails to accept delivery according to the agreed upon delivery schedule, 80/20 may cancel the then remaining balance of the order. Such cancellation, if elected by 80/20, shall be in addition to, and not in lieu of, any other rights or remedies which 80/20 may have at law or equity. Prices are good for only quantities indicated. If shipment or any other act or condition affecting payment for the goods or any part of them shall be delayed on account of Buyer, payment shall be due as if shipment had been made, a reasonable storage charge may be made, and such storage shall be at the risk of Buyer. 80/20 shall not be liable for any direct, indirect, consequential, special, or incidental losses or damages to Buyer or to any third parties resulting from 80/20's delay in shipment regardless of cause, including but not limited to those causes set forth in the Force Majeure section of this document.

3. PRODUCT VARIANCE FROM PHOTOS. 80/20 attempts to provide accurate photographs of the products it offers for sale, but there may be some variation between the photographs and the actual products. Buyer may return any product if the variance is unacceptable to Buyer. Buyer must submit its request for return based on the product variation within thirty (30) days after receipt of the goods.

4. ACCEPTANCE. Goods furnished or services performed by 80/20 will be deemed to have been finally accepted thirty (30) days after receipt by Buyer, unless rightfully rejected within such period by written notice to 80/20, setting forth all of the defects upon which the rejection is claimed. Claims for factory damage or shortages shall not be considered unless made in writing within thirty (30) days after receipt of the goods or services and accompanied by reference to our bill of lading and invoice numbers. Buyer's claims for damage or shortage in transit must be filed by Buyer against carrier. Defective goods shall be held for 80/20's inspection or disposition. Buyer must note damaged goods or the appearance of probable damage with the freight carrier and on the relevant freight documents at the time of receipt.

5. 80/20 PROPERTY. All photographs, samples, descriptions, drawings or intellectual property provided by 80/20 to Buyer shall remain the property of 80/20 and shall only be used by Buyer to market 80/20 products to third parties. Buyer shall include in any materials incorporating 80/20 intellectual property, all copyright and trademark notices provided by 80/20. All such property shall be returned to 80/20 upon demand and any license created hereunder, implied or otherwise, is terminable at will by 80/20 and is hereby expressly terminated pursuant to Section 18 upon termination of this agreement.

6. RETURN POLICY. Buyer shall have no right to return any goods furnished by 80/20. 80/20 may, in its sole discretion, authorize Buyer to return goods. 80/20 may authorize the return of goods without charging a restocking charge, but in most cases, 80/20 will only authorize the return of goods subject to a restocking charge, the amount of which will depend on the type of goods being returned. The restocking charge shall be deducted from the amount refunded to Buyer.

7. TAXES. Prices do not include any federal, state or local taxes. Any applicable excise, import, sales, use or similar taxes, whether federal, state, provincial or local, and any transportation and other charges shall be the responsibility of and be paid by Buyer and, if paid by 80/20, Buyer agrees to reimburse 80/20 for any such payment and further agrees that 80/20 may add any such payments to the purchase price of the goods.

8. PAYMENT/CREDIT/SECURITY. Payment shall be due prior to shipment unless adequate credit remains on an account in good standing. All orders received are subject to credit approval. Buyer agrees to submit from time to time to 80/20 those items reasonably requested in order to establish or update Buyer's credit. 80/20 shall be entitled to charge interest on past due accounts at a rate of 1.5% per month (18% annually). Whenever 80/20, in good faith deems itself insecure, it may, without prejudice or waiving any other rights or remedies it may have at law or equity, cancel any outstanding orders with Buyer and/or hold production/shipment of any unfilled orders; modify or revoke its extension of credit to Buyer; and take any other steps permitted by law and necessary or desirable to secure 80/20 with respect to Buyer's payment of goods and services furnished or to be furnished. Buyer will pay 80/20's actual costs of collection, including but not limited to court costs, litigation expenses, and reasonable attorney's fees, incurred for collection of any delinquency. Title to the goods shall remain with 80/20 until Buyer receives physical possession of the goods and the goods are fully paid for by the Buyer. Buyer shall have no right of offset against amounts owed to 80/20.

9. QUALITY POLICY. 80/20 is dedicated to providing its products free of actual defects in material and workmanship. 80/20 will replace or repair, at 80/20's option, any product which, upon 80/20's inspection is found to have a defect in material and/or workmanship provided such defect is reported to 80/20 in writing within one (1) year of the date of the shipment from 80/20's factory ("Quality Policy"). 80/20 in no event shall be liable for indirect or consequential damages arising out of the use of 80/20 products. Components purchased by 80/20 from others for inclusion by 80/20 shall be warranted only to the extent of the guarantee or warranty, if any, made by the supplier of said component. No warranty is made by 80/20, express or implied, that 80/20 products as used in a customer's design and specifications are fit for that customer's specific purpose. Services performed by 80/20 will be conducted in a manner consistent with that level of care and skill ordinarily exercised by members of the industry currently practicing under similar conditions. As an independent contractor of Buyer, 80/20 will provide evaluation, advice, and guidance to Buyer, but Buyer recognizes that 80/20 is a technical contractor and not a professional consultant.

APART FROM THE ABOVE QUALITY POLICY, THERE ARE NO WARRANTIES, EXPRESS, IMPLIED, OR STATUTORY, INCLUDING, WITHOUT LIMITATION, WARRANTIES OF MERCHANTABILITY AND FITNESS FOR A PARTICULAR PURPOSE, WHICH EXTEND BEYOND THE DESCRIPTION ON THE FACE HEREOF.

80/20 expressly reserves the right to substitute materials in the products described in the catalogs and any supplements thereto; however, this shall not apply to special order products and/or custom products where 80/20 is advised in writing of specific material requirements and agrees in writing to comply with the requests for such specific materials. Any and all warranties shall be construed and enforced under the Laws of the State of Indiana.

10. INDEMNIFICATION. Buyer shall defend, indemnify and hold 80/20 harmless from and against any and all claims, liabilities, loss, costs, damage or expense (including reasonable attorneys' fees) of any kind or nature whatsoever relating to the performance by 80/20 hereunder, including without limitation, claims made for property damage or personal injury (including death), whether such claims are premised on contract or on tort (including, without limitation, strict liability). This indemnity provision shall not apply where such damage or injury is attributable solely to the negligence of 80/20, its employees or agents.

11. FORCE MAJEURE. 80/20 will not be liable for any delay in the performance of its obligation under this Quotation or for any damages suffered by the Buyer by reason of such delay, when such delay is directly or indirectly caused by or in any manner arises from: fires; floods; accidents; riots; acts of God; governmental interference; embargoes; strikes; labor difficulties; shortages of labor, fuel, power, materials or supplies; transportation delays; any existing or future laws or acts of the Federal or any State government (including specifically, but not exclusively, any orders, rules or regulations issued by any official or agency or any such government) affecting the conduct of 80/20's business; or any other cause or causes (whether or not similar in nature to any of those specified above) beyond 80/20's control, including but not limited to modifications to the fabricating specifications requested by the Buyer subsequent to commencement of production by 80/20.

12. NO WAIVER. The failure of 80/20 upon knowledge of any default or violation by Buyer of any of the Terms and Conditions of this Quotation, or any sales agreement entered into hereafter, to enforce its rights or remedies shall not be construed as a waiver of such default or violation, or of any provision hereof, or of any of its rights or remedies.

13. LIMITATION ON LITIGATION/ATTORNEY FEES. Any controversy or claim of Buyer arising out of or related to any transaction with 80/20 must be commenced within one (1) year after the cause of action has accrued. 80/20 shall be entitled to reimbursement of all costs and expenses, including reasonable attorneys' fees, from the Buyer relating to any lawsuit in which 80/20 prevails in any amount or on any claim.

14. ENTIRE AGREEMENT/LAW AND FORUM/SEVERABILITY. Except as otherwise agreed in writing or if another writing incorporates these terms thereby making these terms supplemental to such writing, this constitutes the entire agreement between 80/20 and Buyer, superseding all prior Quotations and understandings, oral or written. All such previous communications are hereby abrogated and withdrawn, and no stipulations, representations or agreements by 80/20, or its officers, agents, or employees shall be binding upon 80/20 unless reduced to writing and attached to and incorporated by reference herein, and no local, general, or trade custom shall alter or vary the terms hereof. Any questions, disputes, controversies, or litigation between 80/20 and Buyer, including but not limited to disputes concerning the validity, interpretation, or effect of the Quotation, or interpretation and enforcement of the rights and obligations of the parties hereunder, shall be governed by the laws of the State of Indiana and the exclusive venue for resolving any such questions, disputes, controversies, or litigation shall be a state or federal court located in Allen County, Indiana. If any provision of this Quotation is determined invalid under applicable law, such invalidity shall be limited to such provision without invalidating the remainder of the other Terms and Conditions hereof; and if any provision of this Quotation is found to be ambiguous or in conflict with any other provision of this Quotation, such ambiguity or conflict shall be resolved in the manner which provides the greatest protection and limitation of liability to 80/20.

15. INSURANCE. 80/20 will maintain Workers' Compensation insurance coverage at such levels as are required under the laws of the State of Indiana. 80/20 will purchase and maintain comprehensive general liability insurance against claims for personal injury or death or damage to property which may arise out of, or result from, 80/20's performance of the services in such amounts as 80/20 maintains in its ordinary course of business.

16. LIMITS OF LIABILITY. 80/20 will not be liable for any punitive damages or legal fees or any special, indirect, or consequential damages (including but not limited to loss of use or loss of profit) or fees which arise out of the performance of the services by 80/20. 80/20 and Buyer agree that absolutely no action arising out of the services may be brought by either party more than one year after substantial completion of the services. The entire liability of 80/20, or its officers, directors, agents, or employees, and Buyer's exclusive remedy for performance or nonperformance of the services shall be the adjustment or correction of the services by 80/20. If after repeated efforts, 80/20 is unable to adequately perform, Buyer shall be entitled to recover a pro-rata credit for the sums actually paid for the defective portion of the services.

17. TERMINATION OR CANCELLATION. Either party may terminate the services and all obligations arising under the proposal for the reason of the failure by the other party to comply with its obligations upon 30 days prior written notice to the other party. In the event of such termination, Buyer will pay to 80/20 all amounts which are due and payable to 80/20 for the services performed through the date of such termination. In addition, in the event the services are terminated as the result of the failure of Buyer to perform its obligations, Buyer will pay to 80/20 a termination charge of 20 percent of the cost of the remaining services to be performed by 80/20.

80/20 BOOKSHELF

Search

Share

Download

Find all 80/20 literature in one location with the Bookshelf.

Flip through the latest interactive 80/20 Catalog. Find parts, pieces and information fast with user-friendly capabilities that allow you to search by part number, name, word, or even by series. Add products to your personal wish list and then save it. Once created you'll have the option to easily click to order.

Download or request copies in our various categories that include the following:

- Product Catalog
- Solutions Booklets
- Digital Content
- Flipbooks

8020.net/bookshelf

Pictorial Table Of Contents

T-Slot Concept Basics
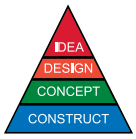

Page 54

Advantages of T-Slot Profiles
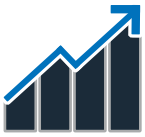
Page 56

Profile Family Types
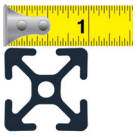

Page 57

Aluminum Profile Shape Types

Page 58

T-Slot Profile Series Standards

Page 59

T-Slot Profile Quick Reference

Page 67

10 Series T-Slotted Aluminum Profiles

F Fractional 10 10 Series

1010-S Profile

Page 76

1010 Profile

Page 77

1001-S Profile

Page 78

1001 Profile

Page 79

1002-S Profile

Page 80

1002 Profile
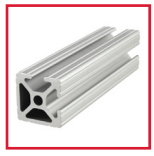
Page 81

1003-S Profile

Page 82

1003 Profile

Page 83

1004-S Profile

Page 84

1004 Profile

Page 85

1012-S Profile

Page 86

1012 Profile

Page 87

1050 Profile

Page 88

2012 Profile

Page 89

1020-S Profile

Page 90

1020 Profile

Page 91

1030-S Profile

Page 92

1030 Profile

Page 93

2020-S Profile

Page 94

2020 Profile

Page 95

2040-S Profile

Page 96

2040 Profile

Page 97

CONTINUE

Pictorial Table Of Contents

15 Series T-Slotted Aluminum Profiles

F Fractional 15 15 Series

1515-ULS Profile Page 98

1515-UL Profile Page 99

1515-LS Profile Page 100

1515-Lite Profile Page 101

1515-S Profile Page 102

1515 Profile Page 103

1501-LS Profile Page 104

1501 Profile 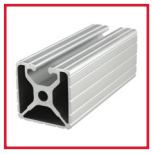 Page 105

1502-LS Profile 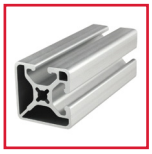 Page 106

1502 Profile 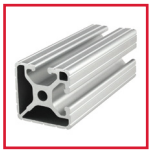 Page 107

1503-LS Profile Page 108

1503 Profile Page 109

1504-LS Profile Page 110

1504 Profile 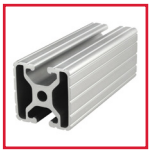 Page 111

1547 Profile Page 112

1517-LS Profile Page 113

1517 Profile Page 114

1575 Profile Page 115

1534-Lite Profile Page 116

3075 Profile Page 117

3034-Lite Profile Page 118

1530-ULS Profile Page 119

1530-UL Profile 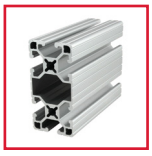 Page 120

1530-LS Profile 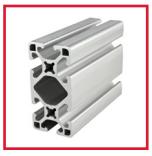 Page 121

1530-Lite Profile 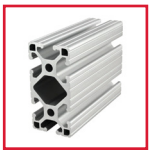 Page 122

1530-S Profile 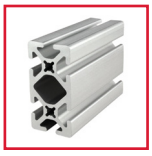 Page 123

1530 Profile 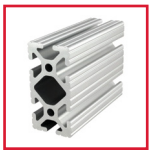 Page 124

1545-LS Profile Page 125

1545-S Profile Page 126

1545 Profile Page 127

3030-LS Profile Page 128

3030-Lite Profile 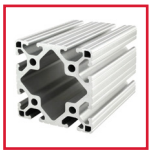 Page 129

3030-S Profile Page 130

3030 Profile 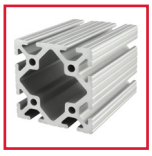 Page 131

3060 Profile Page 132

CONTINUE

Pictorial Table Of Contents

20 Series T-Slotted Aluminum Profiles

M Metric 20 20 Series

20-2020 Profile

Page 133

20-2040 Profile
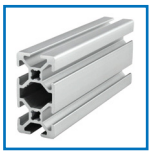
Page 134

20-4040 Profile
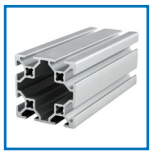
Page 135

25 Series T-Slotted Aluminum Profiles

M Metric 25 25 Series

25-2525 Profile

Page 136

25-2501 Profile
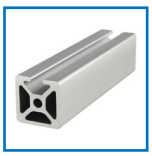
Page 137

25-2502 Profile
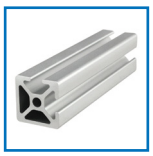
Page 138

25-2503 Profile

Page 139

25-2504 Profile

Page 140

25-2527 Profile
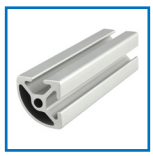
Page 141

25-2514 Profile

Page 142

25-5013 Profile

Page 143

25-2550 Profile

Page 144

25-2576 Profile

Page 145

25-5050 Profile

Page 146

25-5010 Profile

Page 147

30 Series T-Slotted Aluminum Profiles

M Metric 30 30 Series

30-3030 Profile

Page 148

30-3001 Profile

Page 149

30-3002 Profile

Page 150

30-3003 Profile

Page 151

30-3004 Profile

Page 152

30-3022 Profile

Page 153

30-3060 Profile

Page 154

30-6060 Profile

Page 155

CONTINUE

Pictorial Table Of Contents

40 Series T-Slotted Aluminum Profiles

M Metric 40 40 Series

40-4040-UL Profile

Page 156

40-4040-Lite Profile

Page 157

40-4040 Profile

Page 158

40-4001 Profile
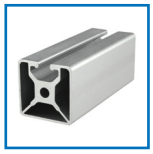
Page 159

40-4002 Profile
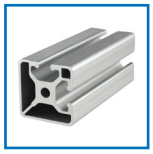
Page 160

40-4003 Profile

Page 161

40-4004 Profile

Page 162

40-4030-Lite Profile

Page 163

40-4093 Profile
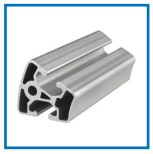
Page 164

40-4094 Profile
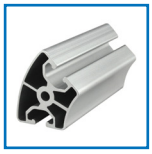
Page 165

40-4096 Profile

Page 166

40-4045-Lite Profile

Page 167

40-4020 Profile

Page 168

40-8020 Profile

Page 169

40-4080-UL Profile

Page 170

40-4080-Lite Profile

Page 171

40-4080 Profile
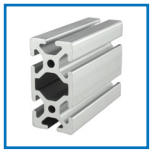
Page 172

40-4082-Lite Profile

Page 173

40-4083-Lite Profile
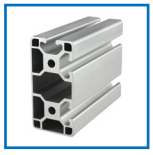
Page 174

40-4084-Lite Profile
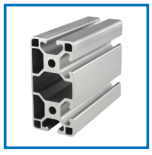
Page 175

40-4085-Lite Profile
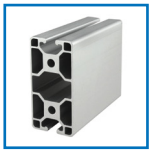
Page 176

40-4012 Profile

Page 177

40-8080 Profile

Page 178

40-8016 Profile

Page 179

45 Series T-Slotted Aluminum Profiles

M Metric 45 45 Series

45-4545-Lite Profile

Page 180

45-4545 Profile

Page 181

45-4590 Profile

Page 182

45-9090 Profile
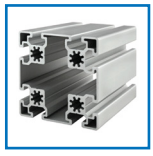
Page 183

CONTINUE

Pictorial Table Of Contents

Ready Tube® Aluminum Profiles

RT Ready Tube

Ready Tube Basics

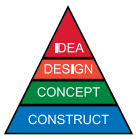

Page 63

Advantages of Ready Tube

Page 64

Aluminum Profile Shape Types

Page 64

Ready Tube Profile Quick Reference

Page 74

9700 Profile

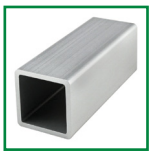

Page 184

9701 Profile

Page 185

9705 Profile

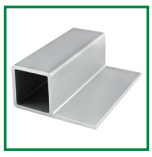

Page 186

9706 Profile

Page 187

9725 Profile

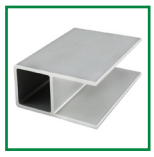

Page 188

9726 Profile

Page 189

9728 Profile

Page 190

Quick Frame® Aluminum Profiles

QF Quick Frame

Quick Frame Basics

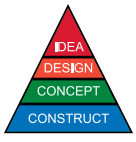

Page 65

Advantages of Quick Frame

Page 66

Aluminum Profile Shape Types

Page 66

Quick Frame Profile Quick Reference

Page 74

9000 Profile

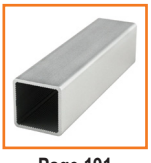

Page 191

9005 Profile

Page 192

9010 Profile

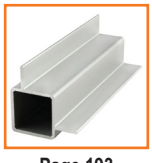

Page 193

9015 Profile

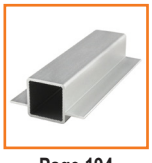

Page 194

9025 Profile

Page 195

9030 Profile

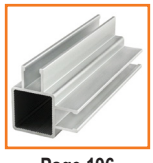

Page 196

9035 Profile

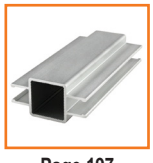

Page 197

Where Do I Begin?

You have a project in mind and now just need to narrow down your product options. 80/20 provides a wide range of profiles and parts to accommodate all of your requirements. To help you decide which items work best for your needs, we've broken down products into a few main categories:

- Profiles
- Fasteners
- Panels & Doors
- Floor to Frame
- Add-On Components
- Stanchions
- Finish Your Frame
- Structural Shapes

Things to Consider

Typically, it's easiest to start by deciding on your profile series. Think about the end purpose of your application to help you narrow down your search for the profile that fits your needs. 80/20 offers profile series in both the fractional and metric family that accommodate the entire scale of small, medium, and large builds.

Your profile should be determined by deciding on the scale, weight, strength, surface (smooth, grooved), open T-slot requirements, color, finish, and shape that you need.

Tip: Use an isometric grid graph (see page 959) to help with your design; draw a sketch and list your exact specifications.

Keep It Compatible

Throughout planning your project, you'll want to be sure all of the subsequent products, such as your fasteners and accessories, are compatible with the profile series you've chosen. Just look for the appropriate icon, or filter by series when shopping.

COMPATIBILITY KEY

F Fractional	M Metric	30 30 Series
10 10 Series	20 20 Series	40 40 Series
15 15 Series	25 25 Series	45 45 Series
RT Ready Tube®	QF Quick Frame®	

Introduction to Aluminum Framing

You have a project or design in mind and now you need to turn that idea into an actual build. Your first step is to choose your profile; T-slotted aluminum profiles, Ready Tube, or Quick Frame. If you would like to head directly to information on Ready Tube, flip to page 63, or to page 65 to read about Quick Frame. Let's begin with the T-slot profile.

The T-slot Concept: Built-in Modularity

T-slot aluminum profiles offer several benefits. The shape of the profile creates modularity, meaning it is easily assembled and reassembled to conform to evolving needs.

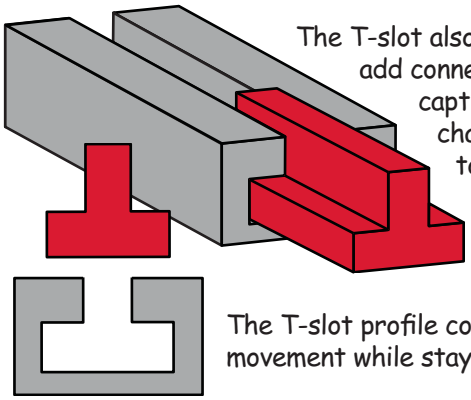

The T-slot also provides the ability to add connections and join profiles to captivated ends. This allows you to change your design without having to start from scratch and also enables easy expansion and retraction of your build for modifications down the road.

The T-slot profile concept is designed to allow movement while staying secure within the T-slot.

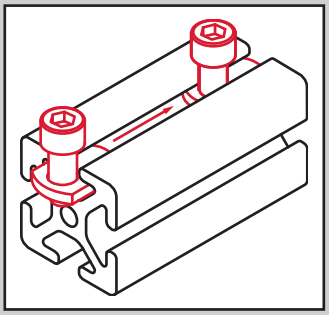

Connections can be made anywhere along the axis of the profile creating an infinite number of mounting points and eliminating incremental positioning.

The T-slot Profile 2° Drop-Lock

Another important attribute of T-slot aluminum profiles is the strong connection made between profiles. 80/20's T-slot aluminum profiles include a 2 degree drop-lock feature for most profiles, which enables connections to remain vibration resistant and strong. 80/20 offers a wide variety of joining options to fit your specific needs (for an overview on fastening products flip to page 206).

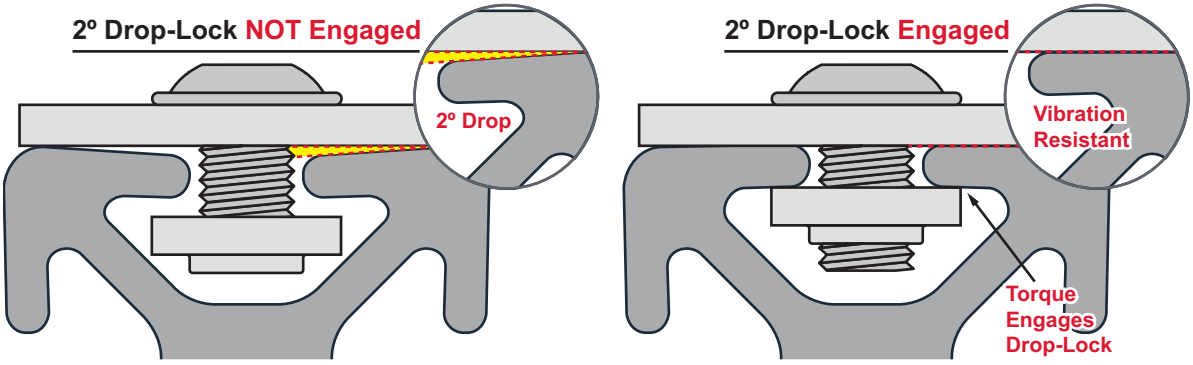

Advantages of T-slot Aluminum Profiles

Moving on from the T-slot concept, let's consider the benefits of aluminum. There are several advantages to T-slot aluminum profiles. Some of the biggest are:

- Strong
- Lightweight
- High strength-to-weight ratio
- Resilient
- Modularity
- Easily machined

All 80/20 profiles come standard with a clear anodize which helps prevent oxidation and corrosion while providing a matte finish.

The Battle of Aluminum vs Steel

Think about the fact that, volume for volume aluminum is one third the weight of iron, steel, copper or brass. Yet it has yield strength of 35,000 psi, which means it is comparable to A36 steel carbon (frequently used in applications such as equipment and machinery supports as well as building frames). Furthermore, aluminum is resilient and can flex under loads or reshape itself after the shock of impact.

80/20 T-slot Aluminum

Modularity is just a part of the many benefits aluminum offers to those looking for an alternative to steel and iron. Other benefits:

- Weighs less than steel
- Corrosion-resistant
- No welding required
- Costs less than steel
- Strength similar to steel
- Machining not required

Aluminum VS Steel

Welded Steel Frame

For the skilled welder, steel can be a viable option but for many it's not an option for many reasons:

- More time and labor
- Welding required
- Machining required
- More expensive
- Needs painting
- One fixed design

Profile Family Types

FRACTIONAL

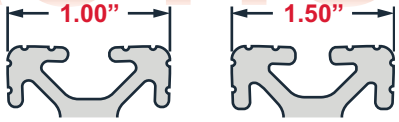

*Profiles are not shown to scale.

The fractional T-slot family uses an inch measurement system (imperial). 80/20 currently offers 57 profiles in fractional units with two standard series; the 10 series and the 15 series. 10 series profiles are based on a 1 inch standard while 15 series profiles are based on a 1.5 inch standard.

Align-a-grooves, featured on our 10 series and some of our 15 series T-slot profiles, aid in aligning and squaring corners and joints during assembly. Align-a-grooves are not available in metric profiles.

METRIC

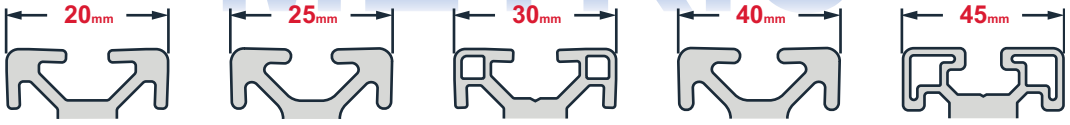

*Profiles are not shown to scale.

The metric T-slot family is measured in meters or millimeters (mm). 80/20 currently offers 51 profiles in metric units with five series; 20, 25, 30, 40 and 45. The dimensions of the metric profiles each coincide with the series; for instance, 20 series profiles are based on a 20mm standard, 25 series are based on a 25mm standard, 30 series profiles are based on a 30mm standard and so on.

After you have decided which measurement system you are going to use, you'll want to decide on a specific profile series. Think about the weight and strength you will need, as well as the shape and open T-slots you want available.

Consider your application and its purpose to help you narrow down your search for the profile that fits your need. 80/20 offers profile series in both the fractional and metric family to accommodate small, medium, and large-scale builds. A prototype project is an example of a small-scale build while a desk or workstation is an example of a medium-scale build. Profiles used for structural framing would be an instance of a large-scale project.

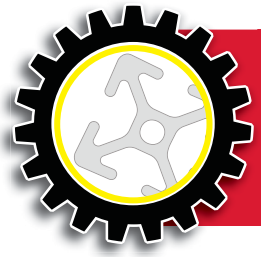

Need to Know

80/20 currently offers both metric and fractional T-slotted profiles with 108 profiles available across seven series types.

The Shape of a Profile

Once you have determined a series that matches the scale of your build, you are ready to choose the shape of your profile. The shape of the profile affects certain properties such as aesthetics and open T-slots. The available shapes are square, rectangle, angled, and radius.

SQUARE

In both the fractional and metric measurement families, 80/20 offers six different square profile shapes. This variety gives you choices to accommodate appearance, accessories and parts. For medium to large-scale applications consider a square profile with eight T-slot openings to allow a multitude of connection points for the addition of profiles and accessories. Some square profiles also include the capability of a pressurized center cavity.

RECTANGLE

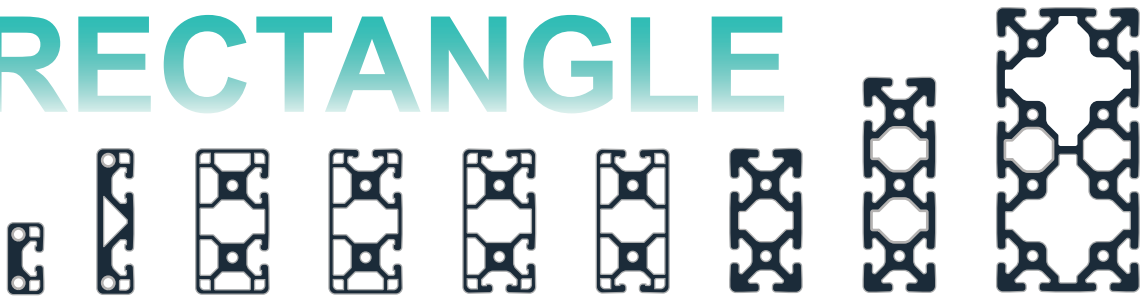

Between the fractional and metric measurement families there are nine rectangle profile shapes and all work well for joining other profiles, parts and accessories. Most rectangular profiles have the capacity for a pressurized center cavity. The twelve-slot rectangle profile is perfect for large-scale purposes, such as load-bearing applications, and offers the most mounting and joining options.

RADIUS & ANGLE

Angled and radius profiles come with 2 open T-slots and are frequently used for panel mounting and exhibits due to their versatility and sleek appearance. The rounded shape of radius profiles works well as hand rails.

To recap, T-slot profiles are extremely versatile, modular and strong. You will first want to choose either the fractional or metric measurement system, and then decide on the specific profile series. From there, narrow down the shape that works best for your build. If you're still not sure which T-slot aluminum profile is right for your project, contact 80/20 at 260.248.8030 or info@8020inc.com for assistance.

Part Number Concept & Identification

Most fractional and metic T-slot profiles have part numbers that directly coincide with the profile's physical measurements. Fractional profile part numbers contain four characters. Metric profile part numbers contain six characters, which relate to the profile's series and dimensions. This series part-numbering concept is explained in more detail below.

Fractional Profile Naming Standards

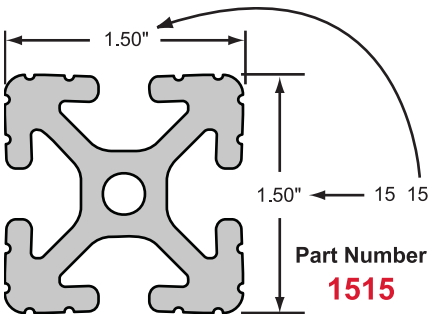

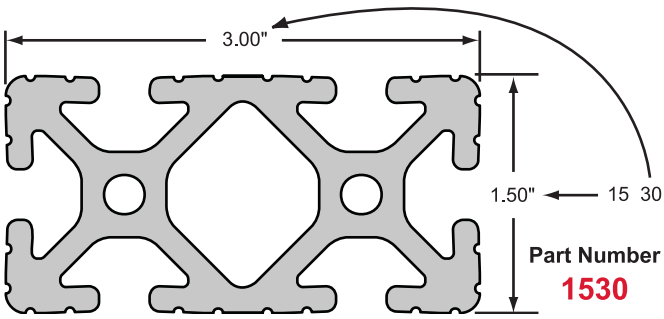

Example: 15 series profiles always measure .75" from the outside edge of the profile to the center of the T-slot.

Metric Profile Naming Standards

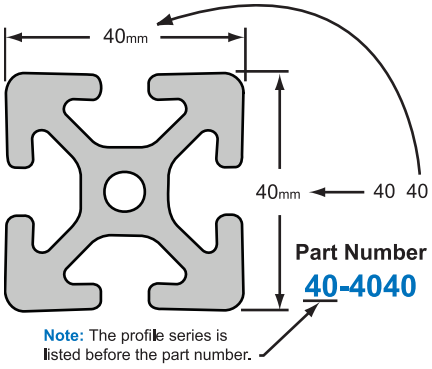

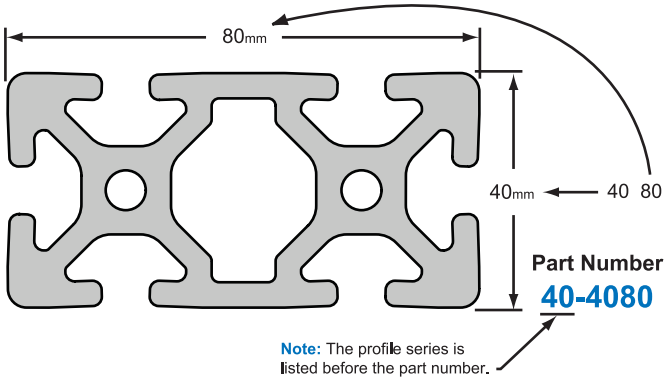

Example: 40 series profiles always measure 20.00mm from the outside edge of the profile to the center of the T-slot.

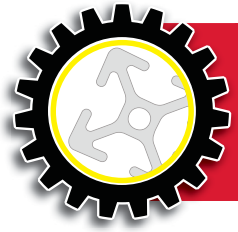

Basic Concept

The dimensions of your profile usually spell out its part number.

Black Anodize

80/20 offers over 1,000 black anodized profiles and parts for your custom designs; these are stocked in-house to provide fast and easy access. We use architectural and organic anodizing processes and both meet Military Spec 8625.

You'll find that black anodize makes your projects look sleek while also providing functionality. Black anodize is ideal for low reflective projects, photo booths, military applications, vision systems and anywhere you want to add a polished appearance.

Need to Know

When ordering black anodized products with machining services, these areas will be exposed, meaning not black. If you would like your profiles or parts completely black, including the machined areas, we can accommodate. Contact us for more details.

Why 6105-T5* Aluminum Alloy?

All of 80/20's T-slot profiles are made of 6105-T5* alloy, an aluminum extrusion alloy that is a metal mixture which includes other elements such as copper, magnesium, iron, silicon or zinc.

Certain properties such as strength, machinability and corrosion resistance are influenced by the choice of alloy and temper.

Alloy 6105* with a T5 temper has better machinability and strength than 6063-T6.

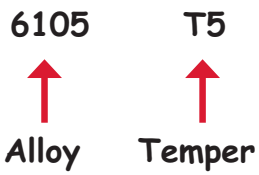

Aluminum Profile Alloys: Number and Characteristics	Tensile Strength - ksi* Ultimate minimum	Yield minimum
6105-T5* (80/20's Alloy)	38.00	35.00
6063-T6	30.00	25.00

Figures based on material thickness of 0.125" to 1.00"
From The Aluminum Extrusion Manual, published by The Aluminum Association and the Aluminum Extruders Council.

Material Strength Specifications

Minimum Yield Strength In Pounds

- 80/20's 6105-T5* alloy yield strength of 35,000 psi compares to A36 carbon steel's yield strength of 36,000 psi.
- Volume for volume, aluminum weighs about 1/3 as much as iron, steel, copper, or brass.

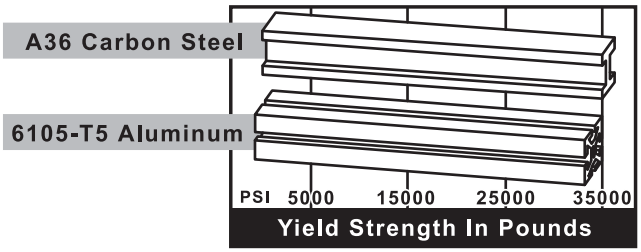

* Or comparable

Simple Beam Deflection Calculations

Formula A

$$\frac{L^3 \cdot W}{48 \cdot E \cdot I} = D$$

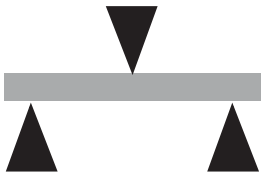

This formula will yield worst case deflection for a beam supported at both ends with the load centered over the span.

Formula B

$$\frac{5L^3 \cdot W}{384 \cdot E \cdot I} = D$$

This formula will yield worst case deflection for a beam supported at both ends with the load evenly distributed over the span.

Formula C

$$\frac{L^3 \cdot W}{3 \cdot E \cdot I} = D$$

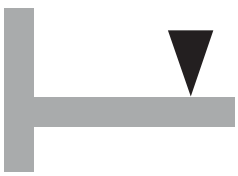

This formula will yield worst case deflection for a beam fastened at one end and cantilevered horizontally with the load applied at the end of the beam.

Example Using Formula A:

Using the 1515 T-slot profile, a length of 30.00 inches, and an applied force of 50 pounds, you should find the approximate beam deflection to be .011 inches. Using the 40-4040 T-slot profile, a length of 762mm, and an applied force of 222.40 Newtons, you should find the approximate beam deflection to be .21mm.

Formula Reference:

L = Length in Inches
W = Load in Pounds
I = Moment of Inertia
E = Modulus of Elasticity
D = Deflection in Inches

T-Slot Profile Specifications

FRACTIONAL		METRIC
35,000 p.s.i. (min)	Yield Strength	241.1 N/mm² (min)
38,000 p.s.i. (min)	Tensile Strength	262.0 N/mm² (min)
A5 minimum 10%	Elongation	A10 minimum 8%
10,200,000 lb/in.²	Elasticity E	70,326.5 N/mm²
Rockwell approximately E-88	Hardness	Brinell approximately 75 HB
.004" per 1 inch of width	Flatness	0.1mm per 25.4mm of width
0.0125 inches per 1 foot of length not to exceed 0.118 inches over 20 feet of length	Straightness	0.32mm per 304mm of length, not to exceed 3mm over 6.1 m of length
Per 1 foot of length not to exceed .25 degree and total twist over 20 feet of length not to exceed 1.5 degrees	Twist	Per 304mm of length not to exceed .25 degree and total twist over 6.1m of length not to exceed 1.5 degrees

Note: Extrusion conforming to DIN 17 615 specifications. Unless otherwise specified, all profiles will have etch and clear (MIL-A-8625F) anodizing with depth of .0004 inches (0.010mm) and surface hardness of approximately 250 HV (anodized profiles should not be welded because of toxic fumes).

Torque Specifications

The tables below show the amount of torque in foot-lbs. and newton meters required to activate the 2 degree drop-lock feature for t-slotted profiles. Nut and bolt combination is preloaded when tightened to the minimum torque rating.

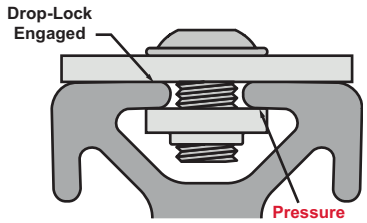

Fractional T-slotted Profiles

Part Number	Fastener Description	Tested Profile	Minimum Torque Ft-lbs.	Maximum Torque Ft-lbs.
3320	5/16-18 x 11/16 Flanged BHSCS & Economy T-Nut	1515	10.00	15.00
3325	5/16-18 x 3/4 Economy T-Slot Stud, Washer & Hex Nut	1515	25.00	30.00
3360	15 Series Anchor Fastener Assembly	1515-Lite	10.00	20.00
3380	15 Series End Fastener Assembly	1515-Lite	10.00	22.00
3321	1/4-20 x 1/2 Flanged BHSCS & Economy T-Nut	1010	4.00	6.00
3395	10 Series Anchor Fastener Assembly	1010	3.00	17.00
3381	10 Series End Fastener Assembly	1010	4.00	17.00

Metric T-slotted Profiles

Part Number	Fastener Description	Tested Profile	Minimum Torque Newton Meters	Maximum Torque Newton Meters
75-3422	M8 x 16mm BHSCS & Economy T-Nut	40-4040	13	20
75-3500	M8 x 20mm Economy T-Slot Stud, Washer & Hex Nut	40-4040	40	54
40-3897	40 Series Anchor Fastener Assembly	40-4040-Lite	13	37
40-3891	40 Series End Fastener Assembly	40-4040-Lite	13	29
75-3404	M6 x 10mm BHSCS & Economy T-Nut	25-2525	5	8
25-3896	25 Series Anchor Fastener Assembly	25-2525	4	23
25-3895	25 Series End Fastener Assembly	25-2525	5	23

The estimated torque calculations in this chart are offered as a guide only. Use of this content by anyone is the sole responsibility of that person and they assume all risk. Due to many variables that affect the torque-tension relationship like human error, surface texture, and lubrication the only way to determine the correct torque is through experimentation under actual joint and assembly conditions.

Fastener Application Test

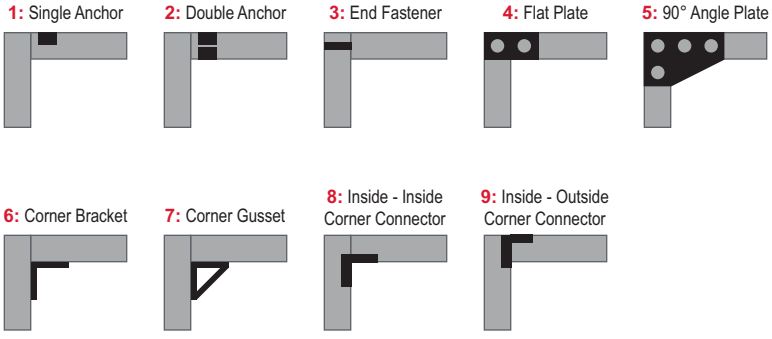

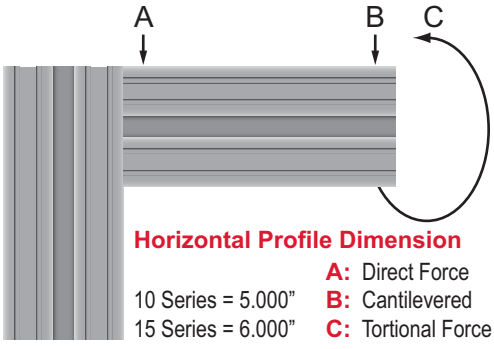

Horizontal Profile Dimension

10 Series = 5.000"
15 Series = 6.000"

A: Direct Force
B: Cantilevered
C: Tortional Force

Fastener	1010 Profile			1515-Lite Profile			1515 Profile		
	A (lbs)	B (lbs)	C (Inch-lbs)	A (lbs)	B (lbs)	C (Inch-lbs)	A (lbs)	B (lbs)	C (Inch-lbs)
1	500	250	180	950	625	540	950	1,000	700
2	900	250	260	1,200	700	1,150	1,200	1,200	2,000
3	450	200	325	1,000	500	680	1,000	820	1,150
4	175	50	400	225	200	1,000	225	200	1,100
5	175	50	500	250	200	1,120	250	200	1,260
6	325	75	180	375	225	500	575	225	500
7	325	220	260	375	750	500	575	750	500
8	—	—	—	50	50	50	—	—	—
9	—	—	—	240	220	240	—	—	—

Introduction to Ready Tube®

Ready Tube is an alternative to steel tubular framing; it is lightweight yet strong and durable. Ready Tube is also corrosion resistant, easy to assemble and cost-effective. Ready Tube is appropriately named; it is ready to use without the need for additional machining.

With or Without Pre-Drilled Holes

Ready Tube is available with or without pre-drilled holes. Profiles with pre-drilled holes have 1.50" centerlines between holes, which enables quick and easy connections without the need for machining.

Ready Tube also comes without pre-drilled holes which make it perfect for customized connections and readily attaching to existing builds. In addition, dirt and water have difficulty getting into these profiles and they are easily cleaned, making it a good fit for applications in laboratories and the food industry.

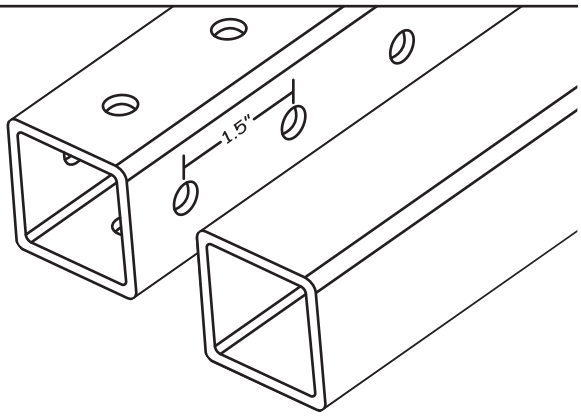

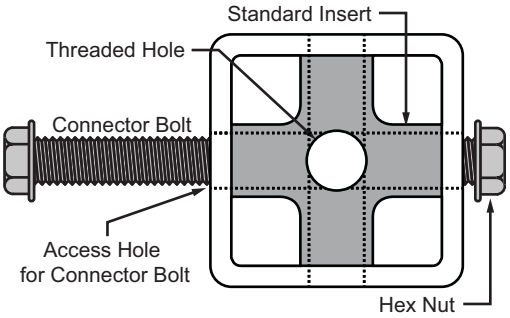

How Ready Tube Works

The most commonly used fastener for Ready Tube is the **Standard Tube Insert** which requires only a wrench to connect. It includes a connector bolt, hex nut and insert that goes inside the Ready Tube profile and is accessed by the pre-drilled holes. 80/20 does offer additional fasteners for Ready Tube; for more information flip to page 419.

Ready Tube Connects in 4 Steps

Advantages of Ready Tube

Ready Tube, similar to the standard 80/20 T-slotted profile, is made of an aluminum alloy which offers several advantages:

- Strong
- Lightweight
- High strength-to-weight ratio
- Resilient
- Corrosion-resistant

Keep in mind that Ready Tube profiles come standard with a clear anodize finish which prevents oxidation and corrosion while providing a matte finish.

The Shapes of Ready Tube

The properties of Ready Tube make it perfect for evolving and changing applications. It works well in builds such as workstations, tables, carts, flow racks, and material handling shelving and racks. When using Ready Tube in your build you have 3 main profile options; square, P-tube, and A-tube.

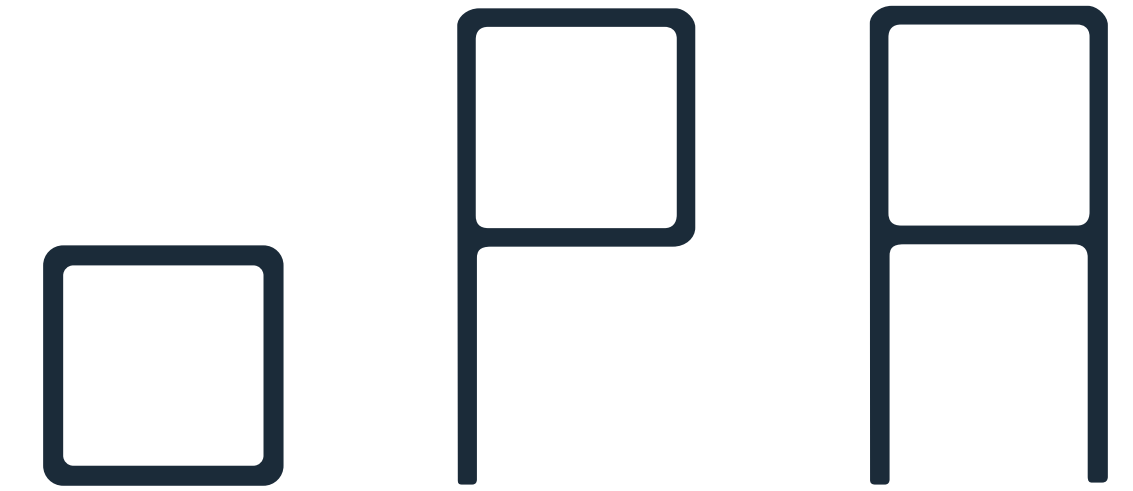

Square Ready Tube profiles are easy to clean and aesthetically appealing, while P-tube profiles have flanges that work well for holding panels. A-tubes are available with or without notches and are perfect for applications such as gravity racks or material handling shelves.

Need to Know

Ready Tube is available with or without pre-manufactured holes and is a great solution for material handling applications.

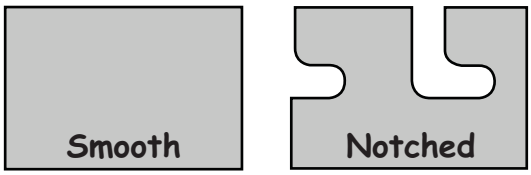

Introduction to Quick Frame®

Quick Frame is an alternative to steel tubular framing and wood construction. It is simple to use, lightweight and can help reduce your product cost. Quick Frame requires few parts for assembly and connects with just one tool. It is a boltless method that fastens with nylon tube inserts. This means that Quick Frame does exactly what its name implies; connects quickly to form light yet sturdy builds.

How Quick Frame Works

Quick Frame profiles are designed specifically to work with Quick Frame connectors; they have built-in ridges that bite into the connector to create tension without the use of hardware. The profiles connect quickly and easily using only a soft-faced mallet to form light-duty yet sturdy builds.

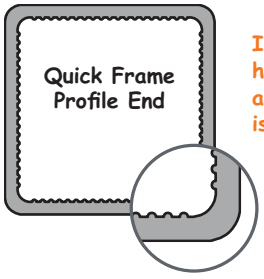

Internal grooves in the Quick Frame profile hold connector in place without the use of additional hardware. A soft-faced mallet is all that is required for assembly.

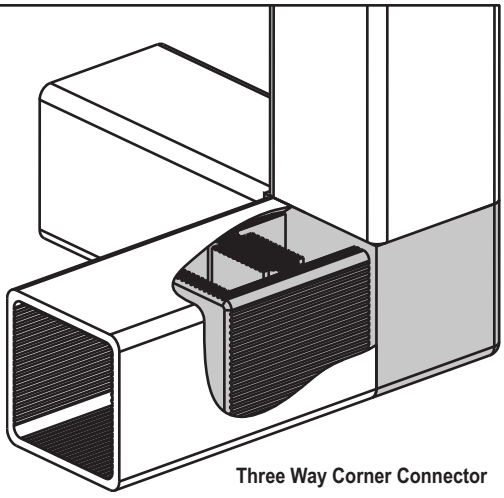

Three Way Corner Connector

Quick Frame Connects in 4 Steps

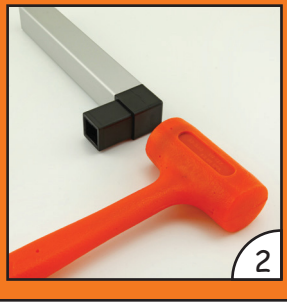

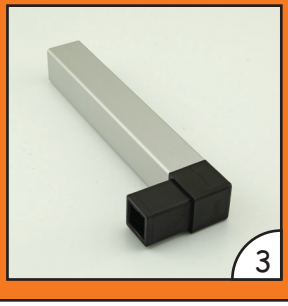

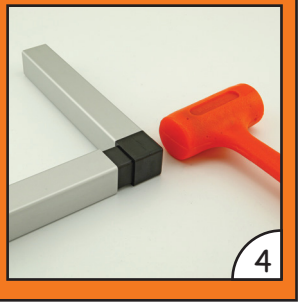

Quick Frame: Strong, Light-Duty Solution

Quick Frame is made of aluminum but is even lighter than most other framing materials such as wood and PVC. This means that Quick Frame retains structural rigidity making it perfect for light-duty applications such as shelving and storage solutions, barrier and splash guards, enclosures, and retail displays.

Added Benefits of Quick Frame

Quick Frame is easily incorporated into preexisting projects and frames already built with T-slotted aluminum profiles. Keep in mind, too, that Quick Frame is anodized which means that it is corrosion resistant and aesthetically appealing. The nylon connectors do not degrade and can even be submerged in water without rusting.

The Shapes of Quick Frame

There are 3 main shapes when it comes to Quick Frame; square, flanged, and twin flanged. Square profiles hinder dirt and debris buildup and are easy to clean while single flanged profiles are perfect for building doors or adding panels. Twin flanged profiles hold panels in place for vertical applications such as enclosures.

Within both the flanged and twin flanged shapes you can choose from either a single flange, a right angle flange or a double flange, allowing you to find the specific Quick Frame profile perfect for your build.

SQUARE

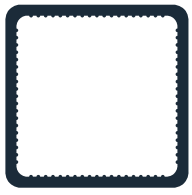

Need to Know

Quick Frame is a light-duty alternative to its heavier steel counterpart, with options for flanged ends to hold guarding.

FLANGED

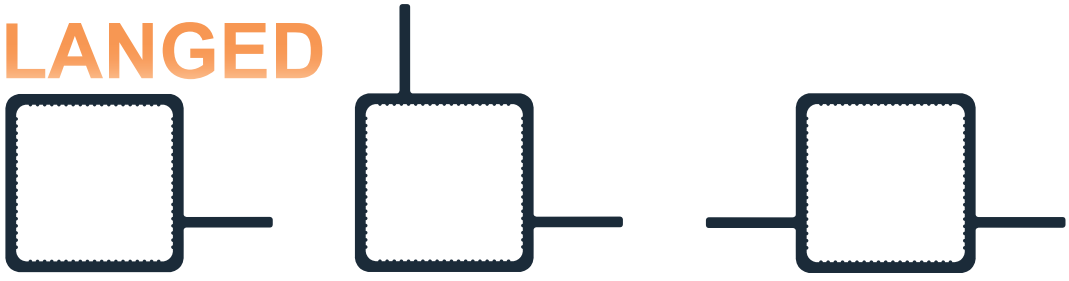

TWIN FLANGED

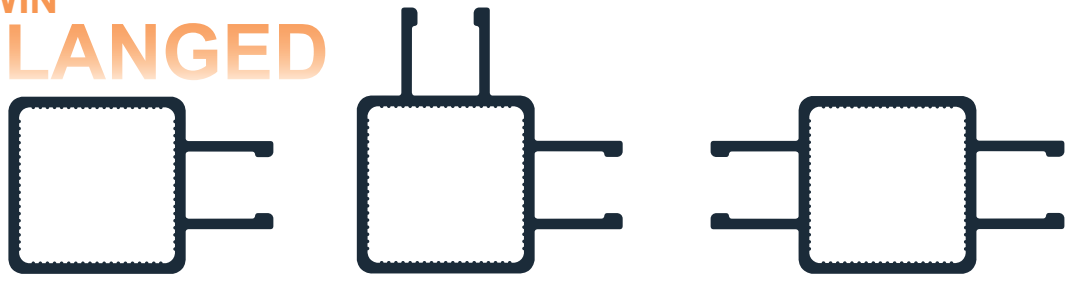

T-Slotted Profile Quick Reference

CONTINUE

10 Series

Part No.	1010-S	1010	1001-S	1001	1002-S	1002
Stock Length	145" or 242"	97", 145", 242"	145" or 242"	145" or 242"	145" or 242"	145" or 242"
Material / Alloy*	Aluminum / 6105-T5*					
Finish	Anodize					
2º Drop Lock	Yes					
Moment of Inertia	IX = 0.0463"⁴ IY = 0.0463"⁴	IX = 0.0442"⁴ IY = 0.0442"⁴	IX = 0.0562"⁴ IY = 0.0517"⁴	IX = 0.0493"⁴ IY = 0.0542"⁴	IX = 0.0518"⁴ IY = 0.0518"⁴	IX = 0.0492"⁴ IY = 0.0492"⁴
Estimated Area	0.437 in.²	0.435 in.²	0.508 in.²	0.506 in.²	0.484 in.²	0.483 in.²
Weight Per Inch	0.0424 lb	0.0424 lb	0.0493 lb	0.0493 lb	0.0470 lb	0.0470 lb

* Or comparable

10 Series

Part No.	1003-S	1003	1004-S	1004	1012-S	1012
Stock Length	145" or 242"	145" or 242"	145" or 242"	145" or 242"	145" or 242"	145" or 242"
Material / Alloy*	Aluminum / 6105-T5*					
Finish	Anodize					
2º Drop Lock	Yes					
Moment of Inertia	IX = 0.0510"⁴ IY = 0.0463"⁴	IX = 0.0441"⁴ IY = 0.0491"⁴	IX = 0.0563"⁴ IY = 0.0467"⁴	IX = 0.0443"⁴ IY = 0.0541"⁴	IX = 0.0414"⁴ IY = 0.0414"⁴	IX = 0.0400"⁴ IY = 0.0400"⁴
Estimated Area	0.461 in.²	0.459 in.²	0.484 in.²	0.482 in.²	0.423 in.²	0.423 in.²
Weight Per Inch	0.0447 lb	0.0448 lb	0.0470 lb	0.0470 lb	0.0411 lb	0.0413 lb

* Or comparable

10 Series

Part No.	1050	2012	1020-S	1020	1030-S	1030
Stock Length	145"	145"	145" or 242"	97", 145", 242"	145" or 242"	145" or 242"
Material / Alloy*	Aluminum / 6105-T5*					
Finish	Anodize					
2º Drop Lock	Yes					
Moment of Inertia	IX = 0.0074"⁴ IY = 0.0323"⁴	IX = 0.2253"⁴ IY = 0.0146"⁴	IX = 0.0863"⁴ IY = 0.3084"⁴	IX = 0.3078"⁴ IY = 0.0833"⁴	IX = 0.1262"⁴ IY = 0.9599"⁴	IX = 0.9711"⁴ IY = 0.1238"⁴
Estimated Area	0.320 in.²	0.564 in.²	0.786 in.²	0.787 in.²	1.135 in.²	1.140 in.²
Weight Per Inch	0.0312 lb	0.0550 lb	0.0763 lb	0.0768 lb	0.1101 lb	0.1112 lb

* Or comparable

T-Slotted Profile Quick Reference

CONTINUE

10 Series

Part No.	2020-S	2020	2040-S	2040
Stock Length	145" or 242"	145" or 242"	145" or 242"	145" or 242"
Material / Alloy*	Aluminum / 6105-T5*			
Finish	Anodize			
2º Drop Lock	Yes			
Moment of Inertia	IX = 0.5545"⁴ IY = 0.5545"⁴	IX = 0.5509"⁴ IY = 0.5509"⁴	IX = 1.0543"⁴ IY = 3.5123"⁴	IX = 3.5168"⁴ IY = 1.0513"⁴
Estimated Area	1.216 in.²	1.228 in.²	2.255 in.²	2.290 in.²
Weight Per Inch	0.1179 lb	0.1198 lb	0.2188 lb	0.2233 lb

* Or comparable

15 Series

Part No.	1515-ULS	1515-UL	1515-LS	1515-Lite	1515-S	1515
Stock Length	145" or 242"	145" or 242"	145" or 242"	97", 145", 242"	145" or 242"	97", 145", 242"
Material / Alloy*	Aluminum / 6105-T5*					
Finish	Anodize					
2º Drop Lock	Yes					
Moment of Inertia	IX = 0.1765"⁴ IY = 0.1765"⁴	IX = 0.1772"⁴ IY = 0.1772"⁴	IX = 0.1921"⁴ IY = 0.1921"⁴	IX = 0.1853"⁴ IY = 0.1853"⁴	IX = 0.2631"⁴ IY = 0.2631"⁴	IX = 0.2542"⁴ IY = 0.2542"⁴
Estimated Area	0.810 in.²	0.787 in.²	0.882 in.²	0.896 in.²	1.138 in.²	1.152 in.²
Weight Per Inch	0.0790 lb	0.0768 lb	0.0860 lb	0.0873 lb	0.1109 lb	0.1123 lb

* Or comparable

15 Series

Part No.	1501-LS	1501	1502-LS	1502	1503-LS	1503
Stock Length	145" or 242"	145" or 242"	145" or 242"	145" or 242"	145" or 242"	145" or 242"
Material / Alloy*	Aluminum / 6105-T5*					
Finish	Anodize					
2º Drop Lock	Yes					
Moment of Inertia	IX = 0.1820"⁴ IY = 0.1799"⁴	IX = 0.1726"⁴ IY = 0.1694"⁴	IX = 0.1834"⁴ IY = 0.1834"⁴	IX = 0.1660"⁴ IY = 0.1730"⁴	IX = 0.1859"⁴ IY = 0.1840"⁴	IX = 0.1760"⁴ IY = 0.1790"⁴
Estimated Area	0.815 in.²	0.826 in.²	0.832 in.²	0.844 in.²	0.848 in.²	0.862 in.²
Weight Per Inch	0.0788 lb	0.0805 lb	0.0811 lb	0.0823 lb	0.0827 lb	0.0840 lb

* Or comparable

T-Slotted Profile Quick Reference

CONTINUE

15 Series

Part No.	1504-LS	1504	1547	1517-LS	1517	1575
Stock Length	145” or 242”	145” or 242”	145” or 242”	145” or 242”	97”, 145”, 242”	145” or 242”
Material / Alloy*	Aluminum / 6105-T5*					
Finish	Anodize					
2º Drop Lock	Yes					
Moment of Inertia	IX = 0.1796”⁴ IY = 0.1759”⁴	IX = 0.1729”⁴ IY = 0.1665”⁴	IX = 0.1365”⁴ IY = 0.1365”⁴	IX = 0.1686”⁴ IY = 0.1686”⁴	IX = 0.1662”⁴ IY = 0.1662”⁴	IX = 0.0380”⁴ IY = 0.1470”⁴
Estimated Area	0.815 in.²	0.827 in.²	0.740 in.²	0.748 in.²	0.765 in.²	0.686 in.²
Weight Per Inch	0.0795 lb	0.0807 lb	0.0723 lb	0.0729 lb	0.0746 lb	0.0669 lb

* Or comparable

15 Series

Part No.	1534-Lite	3075	3034-Lite	1530-ULS	1530-UL	1530-LS
Stock Length	145”	145” or 242”	145”	145” or 242”	145” or 242”	145” or 242”
Material / Alloy*	Aluminum / 6105-T5*					
Finish	Anodize					
2º Drop Lock	Yes					
Moment of Inertia	IX = 0.0356”⁴ IY = 0.1360”⁴	IX = 1.0672”⁴ IY = 0.0789”⁴	IX = 0.9829”⁴ IY = 0.0725”⁴	IX = 1.2855”⁴ IY = 0.3317”⁴	IX = 1.2481”⁴ IY = 0.3177”⁴	IX = 1.3881”⁴ IY = 0.4061”⁴
Estimated Area	0.634 in.²	1.320 in.²	1.186 in.²	1.388 in.²	1.354 in.²	1.682 in.²
Weight Per Inch	0.0618 lb	0.1287 lb	0.1157 lb	0.1350 lb	0.1320 lb	0.1640 lb

* Or comparable

15 Series

Part No.	1530-Lite	1530-S	1530	1545-LS	1545-S	1545
Stock Length	97”, 145”, 242”	145” or 242”	97”, 145”, 242”	145” or 242”	145” or 242”	145” or 242”
Material / Alloy*	Aluminum / 6105-T5*					
Finish	Anodize					
2º Drop Lock	Yes					
Moment of Inertia	IX = 1.3847”⁴ IY = 0.3935”⁴	IX = 1.8127”⁴ IY = 0.4957”⁴	IX = 1.8042”⁴ IY = 0.4824”⁴	IX = 4.4732”⁴ IY = 0.6251”⁴	IX = 5.6675”⁴ IY = 0.7282”⁴	IX = 5.6929”⁴ IY = 0.7097”⁴
Estimated Area	1.722 in.²	2.036 in.²	2.077 in.²	2.492 in.²	2.935 in.²	3.002 in.²
Weight Per Inch	0.1679 lb	0.1985 lb	0.2025 lb	0.2420 lb	0.2862 lb	0.2927 lb

* Or comparable

T-Slotted Profile Quick Reference

CONTINUE

15 Series

Part No.	3030-LS	3030-Lite	3030-S	3030	3060
Stock Length	145" or 242"	145" or 242"	145" or 242"	145" or 242"	145", 192", 242"
Material / Alloy*	Aluminum / 6105-T5*				
Finish	Anodize				
2º Drop Lock	Yes				
Moment of Inertia	IX = 2.6861"^{4} IY = 2.6861"^{4}	IX = 2.6959"^{4} IY = 2.6959"^{4}	IX = 3.3496"^{4} IY = 3.3496"^{4}	IX = 3.4133"^{4} IY = 3.4133"^{4}	IX = 22.0300"^{4} IY = 6.5164"^{4}
Estimated Area	2.659 in.^{2}	2.763 in.^{2}	3.109 in.^{2}	3.212 in.^{2}	5.963 in.^{2}
Weight Per Inch	0.2593 lb	0.2695 lb	0.3032 lb	0.3132 lb	0.5815 lb

* Or comparable

20 Series

Part No.	20-2020	20-2040	20-4040
Stock Length	4 or 6 Meter	4 or 6 Meter	4 or 6 Meter
Material / Alloy*	Aluminum / 6105-T5*		
Finish	Anodize		
2º Drop Lock	Yes		
Moment of Inertia	IX = 0.6826 cm^4 IY = 0.6826 cm^4	IX = 4.5357 cm^4 IY = 1.2133 cm^4	IX = 7.8219 cm^4 IY = 7.8219 cm^4
Estimated Area	1.591 cm^2	2.750 cm^2	4.227 cm^2
Weight Per Meter	0.4420 kg	0.7427 kg	1.1722 kg

* Or comparable

25 Series

Part No.	25-2525	25-2501	25-2502	25-2503	25-2504	25-2527
Stock Length	4 or 6 Meter	4 or 6 Meter	4 or 6 Meter	4 or 6 Meter	4 or 6 Meter	4 or 6 Meter
Material / Alloy*	Aluminum / 6105-T5*					
Finish	Anodize					
2º Drop Lock	Yes					
Moment of Inertia	IX = 1.7726 cm^4 IY = 1.7726 cm^4	IX = 2.1892 cm^4 IY = 1.9873 cm^4	IX = 1.9780 cm^4 IY = 1.9780 cm^4	IX = 1.9688 cm^4 IY = 1.7669 cm^4	IX = 2.2730 cm^4 IY = 1.7761 cm^4	IX = 1.4578 cm^4 IY = 1.4578 cm^4
Estimated Area	2.746 cm^2	3.185 cm^2	3.039 cm^2	2.892 cm^2	3.039 cm^2	2.428 cm^2
Weight Per Meter	0.7427 kg	0.8608 kg	0.8214 kg	0.7820 kg	0.8214 kg	0.6568 kg

* Or comparable

T-Slotted Profile Quick Reference

CONTINUE

25 Series

Part No.	25-2514	25-5013	25-2550	25-2576	25-5050	25-5010
Stock Length	4 Meter	4 Meter	4 or 6 Meter	4 or 6 Meter	4 or 6 Meter	4 or 6 Meter
Material / Alloy*	Aluminum / 6105-T5*					
Finish	Anodize					
2º Drop Lock	Yes					
Moment of Inertia	IX = 0.3030 cm^4 IY = 1.3003 cm^4	IX = 8.8452 cm^4 IY = 0.5897 cm^4	IX = 12.1714 cm^4 IY = 3.1966 cm^4	IX = 37.2852 cm^4 IY = 4.5921 cm^4	IX = 21.1231 cm^4 IY = 21.1231 cm^4	IX = 132.0109 cm^4 IY = 39.1136 cm^4
Estimated Area	2.022 cm^2	3.528 cm^2	4.857 cm^2	6.889 cm^2	7.487 cm^2	13.743 cm^2
Weight Per Meter	0.5458 kg	0.9628 kg	1.3135 kg	1.8665 kg	2.0240 kg	3.7133 kg

* Or comparable

30 Series

Part No.	30-3030	30-3001	30-3002	30-3003	30-3004	30-3022
Stock Length	4 or 6 Meter	4 or 6 Meter	4 or 6 Meter	4 or 6 Meter	4 or 6 Meter	4 or 6 Meter
Material / Alloy*	Aluminum / 6105-T5*					
Finish	Anodize					
2º Drop Lock	Yes					
Moment of Inertia	IX = 2.7221 cm^4 IY = 2.7221 cm^4	IX = 2.7176 cm^4 IY = 2.6691 cm^4	IX = 2.6758 cm^4 IY = 2.6758 cm^4	IX = 2.6832 cm^4 IY = 2.6343 cm^4	IX = 2.6212 cm^4 IY = 2.5234 cm^4	IX = 2.2948 cm^4 IY = 2.2948 cm^4
Estimated Area	3.144 cm^2	3.067 cm^2	3.066 cm^2	3.065 cm^2	2.986 cm^2	2.840 cm^2
Weight Per Meter	0.8715 kg	0.8220 kg	0.8217 kg	0.8214 kg	0.8002 kg	0.7612 kg

* Or comparable

30 Series

Part No.	30-3060	30-6060
Stock Length	4 or 6 Meter	4 or 6 Meter
Material / Alloy*	Aluminum / 6105-T5*	
Finish	Anodize	
2º Drop Lock	Yes	
Moment of Inertia	IX = 5.4332 cm^4 IY = 19.6933 cm^4	IX = 36.3307 cm^4 IY = 36.3307 cm^4
Estimated Area	5.928 cm^2	9.299 cm^2
Weight Per Meter	1.6428 kg	2.5787 kg

* Or comparable

T-Slotted Profile Quick Reference

CONTINUE

40 Series

Part No.	40-4040-UL	40-4040-Lite	40-4040	40-4001	40-4002	40-4003
Stock Length	4 or 6 Meter	4 or 6 Meter	4 or 6 Meter	4 or 6 Meter	4 or 6 Meter	4 or 6 Meter
Material / Alloy*	Aluminum / 6105-T5*					
Finish	Anodize					
2º Drop Lock	Yes					
Moment of Inertia	IX = 8.7059 cm^4 IY = 8.7059 cm^4	IX = 9.3983 cm^4 IY = 9.3983 cm^4	IX = 13.7870 cm^4 IY = 13.7870 cm^4	IX = 8.5389 cm^4 IY = 8.2599 cm^4	IX = 8.6303 cm^4 IY = 8.6303 cm^4	IX = 9.0094 cm^4 IY = 8.7823 cm^4
Estimated Area	5.750 cm^2	6.608 cm^2	8.742 cm^2	5.968 cm^2	6.118 cm^2	6.268 cm^2
Weight Per Meter	1.5533 kg	1.7860 kg	2.3640 kg	1.6142 kg	1.6535 kg	1.6947 kg

* Or comparable

40 Series

Part No.	40-4004	40-4030-Lite	40-4045-Lite	40-4093	40-4094	40-4096
Stock Length	4 or 6 Meter	4 or 6 Meter	4 or 6 Meter	4 Meter	4 Meter	4 Meter
Material / Alloy*	Aluminum / 6105-T5*					
Finish	Anodize					
2º Drop Lock	Yes					
Moment of Inertia	IX = 8.6050 cm^4 IY = 8.0430 cm^4	IX = 7.5590 cm^4 IY = 7.5590 cm^4	IX = 6.9991 cm^4 IY = 7.0047 cm^4	—	—	—
Estimated Area	5.954 cm^2	5.729 cm^2	5.541 cm^2	4.711 cm^2	6.309 cm^2	7.828 cm^2
Weight Per Meter	1.6106 kg	1.5497 kg	1.4996 kg	1.2742 kg	1.7054 kg	2.1170 kg

* Or comparable

40 Series

Part No.	40-4020	40-8020	40-4080-UL	40-4080-Lite	40-4080	40-4082-Lite
Stock Length	4 Meter	4 Meter	4 or 6 Meter	4 or 6 Meter	4 or 6 Meter	4 or 6 Meter
Material / Alloy*	Aluminum / 6105-T5*					
Finish	Anodize					
2º Drop Lock	Yes					
Moment of Inertia	IX = 1.8260 cm^4 IY = 6.6587 cm^4	IX = 49.6609 cm^4 IY = 3.7286 cm^4	IX = 63.1358 cm^4 IY = 15.4754 cm^4	IX = 71.8926 cm^4 IY = 18.7791 cm^4	IX = 97.6617 cm^4 IY = 25.2917 cm^4	IX = 66.4788 cm^4 IY = 16.3044 cm^4
Estimated Area	4.550 cm^2	8.482 cm^2	9.792 cm^2	12.532 cm^2	15.332 cm^2	10.982 cm^2
Weight Per Meter	1.2312 kg	2.2960 kg	2.6485 kg	3.3876 kg	4.1464 kg	2.9689 kg

* Or comparable

T-Slotted Profile Quick Reference

CONTINUE

40 40 Series

Part No.	40-4083-Lite	40-4084-Lite	40-4085-Lite	40-4012	40-8080	40-8016
Stock Length	4 or 6 Meter	4 or 6 Meter	4 or 6 Meter	4 or 6 Meter	4 or 6 Meter	4 or 6 Meter
Material / Alloy*	Aluminum / 6105-T5*					
Finish	Anodize					
2º Drop Lock	Yes					
Moment of Inertia	IX = 68.1908 cm^4 IY = 16.4684 cm^4	IX = 69.7265 cm^4 IY = 16.6107 cm^4	IX = 67.8369 cm^4 IY = 15.9404 cm^4	IX = 306.3198 cm^4 IY = 36.8008 cm^4	IX = 171.6341 cm^4 IY = 171.6341 cm^4	IX = 1111.9793 cm^4 IY = 322.7985 cm^4
Estimated Area	11.074 cm^2	11.174 cm^2	11.000 cm^2	21.927 cm^2	23.573 cm^2	43.490 cm^2
Weight Per Meter	2.9957 kg	3.0208 kg	2.9760 kg	5.9306 kg	6.3762 kg	11.7627 kg

* Or comparable

45 45 Series

Part No.	45-4545-Lite	45-4545	45-4590	45-9090
Stock Length	4 or 6 Meter	4 or 6 Meter	4 or 6 Meter	4 or 6 Meter
Material / Alloy*	Aluminum / 6105-T5*			
Finish	Anodize			
2º Drop Lock	No			
Moment of Inertia	IX = 9.2029 cm^4 IY = 9.2029 cm^4	IX = 13.9604 cm^4 IY = 13.9604 cm^4	IX = 104.2072 cm^4 IY = 25.2637 cm^4	IX = 178.4968 cm^4 IY = 179.4968 cm^4
Estimated Area	5.167 cm^2	7.587 cm^2	12.615 cm^2	20.014 cm^2
Weight Per Meter	1.3976 kg	2.0455 kg	3.4109 kg	5.4116 kg

* Or comparable

Ready Tube® Profile Quick Reference

RT Ready Tube

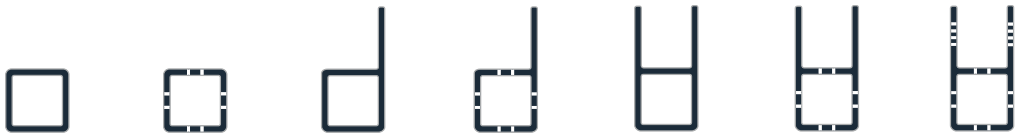

Part No.	9700	9701	9705	9706	9725	9726	9728
Stock Length	100” or 150”	100” or 150”	100” or 150”	100” or 150”	100” or 150”	100” or 150”	100” or 150”
Material / Alloy*	Aluminum / 6105-T5*						
Finish	Anodize						
Estimated Area	0.6775 $in.^2$	0.6775 $in.^2$	0.8691 $in.^2$	0.8691 $in.^2$	1.0610 $in.^2$	1.0610 $in.^2$	1.0610 $in.^2$
Weight Per Inch	0.0660 lb	0.0660 lb	0.1033 lb	0.0848 lb	0.1033 lb	0.1033 lb	0.1033 lb
Pre-drilled Holes	No	Yes	No	Yes	No	Yes	Yes
Notched Flanges	No	No	No	No	No	No	Yes

* Or comparable

Quick Frame® Profile Quick Reference

QF Quick Frame

Part No.	9000	9005	9010	9015	9025	9030	9035
Stock Length	145”	145”	145”	145”	145”	145”	145”
Material / Alloy*	Aluminum / 6105-T5*						
Finish	Anodize						
Estimated Area	0.2228 $in.^2$	0.2528 $in.^2$	0.2828 $in.^2$	0.2828 $in.^2$	0.2889 $in.^2$	0.3550 $in.^2$	0.3550 $in.^2$
Weight Per Inch	0.0231 lb	0.0261 lb	0.0291 lb	0.0291 lb	0.0296 lb	0.0362 lb	0.0362 lb

* Or comparable

1.00” X 1.00” T-Slotted Profile - Four Open T-Slots

Part No. 1010

1.00" x 1.00" Smooth Surface T-Slotted Profile - Four Open T-Slots

Part No. 1010-S

1.00” X 1.00” Smooth Surface T-Slotted Profile - Four Open T-Slots

Part No. 1010-S-Black-FB

PRODUCT SELECTOR

CHOOSE THE RIGHT PART FOR YOUR PROJECT

At 80/20 we offer a wide range of product options so that you can get the exact profile or part you need to complete your unique project to your specific requirements. Use our product selector to input criteria and narrow down your options. This selector is easy to use and helpful from the brainstorming phase all the way through design and purchase.

8020.NET/PRODUCT-SELECTOR

1.00” X 1.00” Smooth Surface T-Slotted Profile - Four Open T-Slots

1010-S Profile

1010-S is a 1.00” x 1.00” fractional 10 series square T-slot profile with four open T-slots, one on each 1.00” face. The profile is smooth, which makes it resistant to dirt and debris buildup while also being easy to clean. The 1010-S profile is compatible with all 10 series fasteners. The four open T-slots enable access from any direction and are useful for mounting accessories.

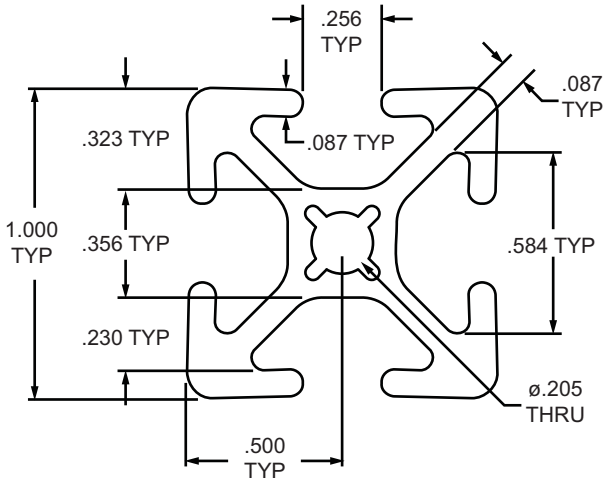

Part No.	Series	Stock Length	Material	Alloy**	Finish	Drop Lock	Moment of Inertia	Surface Area	Yield Strength	Modulus of Elasticity	Weight
1010-S *	10	145”, 242”	Aluminum	6105-T5	Clear Anodize	2°	IX = 0.0463in4 IY = 0.0463in4	0.437 in.2	35,000 psi	10,200,000 lb / in.2	0.0424 lb / in.
1010-S-Black-FB		per inch			Black Anodize						

* The above profiles are sold per inch or stock length.

** Or comparable

Standard Machining Services

Service No.	Series	Service Description	Reference Page
7005	10	Cut to Length	859
7051	10	Access Hole	863
7042	10	Anchor Counterbore	865
7061	10	Tap Profile End	861

1010 Profile

1010 is a 1.00” x 1.00” fractional 10 series square T-slot profile with four open T-slots, one on each 1.00” face. The profile has align-a-grooves to assist in aligning connecting profiles. The 1010 profile is compatible with all 10 series fasteners. This profile lends itself to machine guards, sound enclosures, work benches, panel mount racks and displays. The four open T-slots enable access from any direction and are useful for mounting accessories.

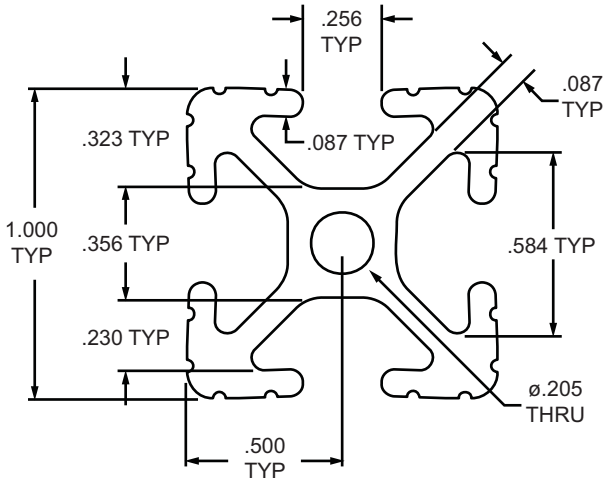

Part No.	Series	Stock Length	Material	Alloy**	Finish	Drop Lock	Moment of Inertia	Surface Area	Yield Strength	Modulus of Elasticity	Weight
1010 *	10	97”, 145”, 242”	Aluminum	6105-T5	Clear Anodize	2°	IX = 0.0442in4 IY = 0.0442in4	0.435 in.2	35,000 psi	10,200,000 lb / in.2	0.0424 lb / in.
1010-Black *		145”			Black Anodize						
1010-Black-FB		per inch			Black Anodize						
1010-Yellow *		145”			Yellow Powder Coat						

* The above profiles are sold per inch or stock length.

** Or comparable

Standard Machining Services

Service No.	Series	Service Description	Reference Page
7005	10	Cut to Length	859
7051	10	Access Hole	863
7042	10	Anchor Counterbore	865
7061	10	Tap Profile End	861

1.00” X 1.00” Smooth Surface T-Slotted Profile - Single Open T-Slot

1001-S Profile

1001-S is a 1.00” x 1.00” fractional 10 series square T-slot profile with one open T-slot on one 1.00” face. The profile is smooth, which makes it resistant to dirt and debris buildup while also being easy to clean. The 1001-S profile is compatible with 10 series fasteners. The three closed faces on this profile provide a clean, aesthetic look and it lends itself to furniture, displays, desks, trade show booths, or retail kiosks.

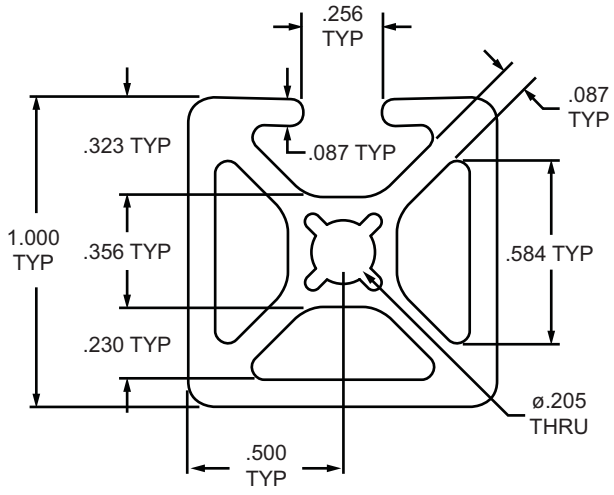

Part No.	Series	Stock Length	Material	Alloy**	Finish	Drop Lock	Moment of Inertia	Surface Area	Yield Strength	Modulus of Elasticity	Weight
1001-S *	10	145”, 242”	Aluminum	6105-T5	Clear Anodize	2°	IX = 0.0562”⁴ IY = 0.0517”⁴	0.437 in.²	35,000 psi	10,200,000 lb / in.²	0.0493 lb / in.
1001-S-Black-FB		per inch			Black Anodize						

* The above profiles are sold per inch or stock length.

** Or comparable

Standard Machining Services

Service No.	Series	Service Description	Reference Page
7005	10	Cut to Length	859
7051	10	Access Hole	863
7042	10	Anchor Counterbore	865
7061	10	Tap Profile End	861

1001 Profile

1001 is a 1.00” x 1.00” fractional 10 series square T-slot profile with one open T-slot on one 1.00” face. The profile has align-a-grooves to assist in alignment when connecting profiles. The 1001 profile is compatible with 10 series fasteners. The three closed faces on this profile provide a clean, aesthetic look and it lends itself to furniture, displays, desks, trade show booths, or retail kiosks.

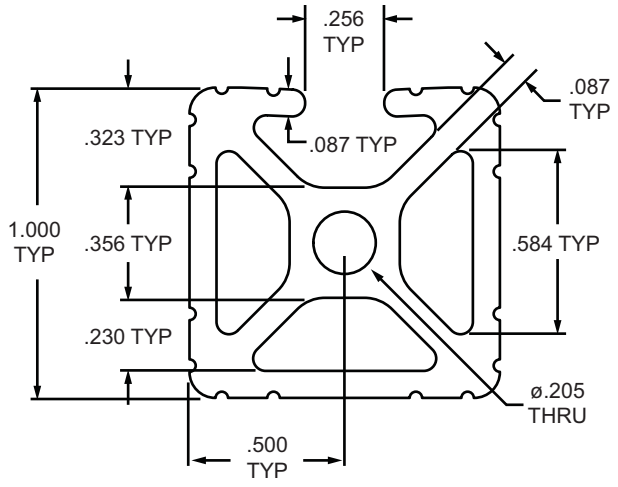

Part No.	Series	Stock Length	Material	Alloy**	Finish	Drop Lock	Moment of Inertia	Surface Area	Yield Strength	Modulus of Elasticity	Weight
1001 *	10	145”, 242”	Aluminum	6105-T5	Clear Anodize	2°	IX = 0.0493”⁴ IY = 0.0542”⁴	0.506 in.²	35,000 psi	10,200,000 lb / in.²	0.0493 lb / in.
1001-Black-FB		per inch			Black Anodize						

* The above profiles are sold per inch or stock length.

** Or comparable

Standard Machining Services

Service No.	Series	Service Description	Reference Page
7005	10	Cut to Length	859
7051	10	Access Hole	863
7042	10	Anchor Counterbore	865
7061	10	Tap Profile End	861

1.00” X 1.00” Smooth Surface T-Slotted Profile - Two Adjacent Open T-Slots

1002-S Profile

1002-S is a 1.00” x 1.00” fractional 10 series square T-slot profile with two adjacent open T-slots, one on two 1.00” faces. The profile is smooth, which makes it resistant to dirt and debris buildup while also being easy to clean. The 1002-S profile is compatible with 10 series fasteners. The two closed faces on this profile provide a clean, aesthetic look and lends itself to furniture, displays, desks, trade show booths, or retail kiosks.

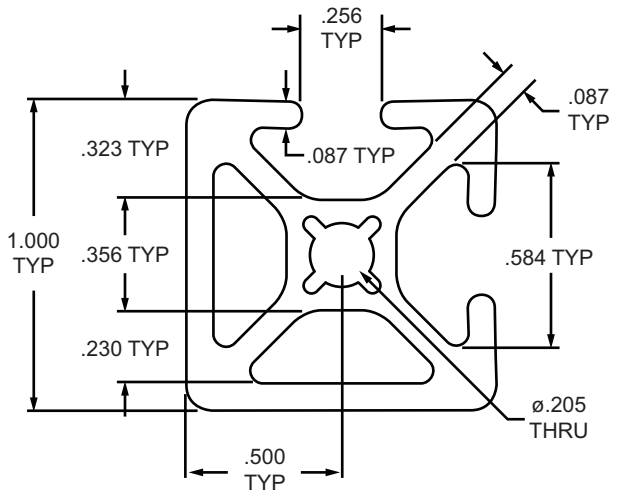

Part No.	Series	Stock Length	Material	Alloy**	Finish	Drop Lock	Moment of Inertia	Surface Area	Yield Strength	Modulus of Elasticity	Weight
1002-S *	10	145”, 242”	Aluminum	6105-T5	Clear Anodize	2°	IX = 0.0518in4 IY = 0.0518in4	0.484 in.2	35,000 psi	10,200,000 lb / in.2	0.0470 lb / in.
1002-S-Black-FB		per inch			Black Anodize						

* The above profiles are sold per inch or stock length.

** Or comparable

Standard Machining Services

Service No.	Series	Service Description	Reference Page
7005	10	Cut to Length	859
7051	10	Access Hole	863
7042	10	Anchor Counterbore	865
7061	10	Tap Profile End	861

1002 Profile

1002 is a 1.00" x 1.00" fractional 10 series square T-slot profile with two adjacent open T-slots, one on two 1.00" faces. The profile has align-a-grooves to assist in alignment when connecting profiles. The 1002 profile is compatible with 10 series fasteners. The two closed faces on this profile provide a clean, aesthetic look and lends itself to furniture, displays, desks, trade show booths, or retail kiosks.

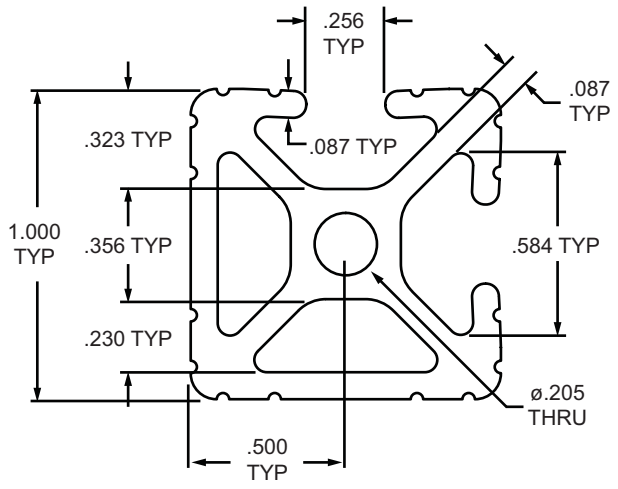

Part No.	Series	Stock Length	Material	Alloy**	Finish	Drop Lock	Moment of Inertia	Surface Area	Yield Strength	Modulus of Elasticity	Weight
1002 *	10	145", 242"	Aluminum	6105-T5	Clear Anodize	2°	IX = 0.0492"⁴ IY = 0.0492"⁴	0.483 in.²	35,000 psi	10,200,000 lb / in.²	0.0470 lb / in.
1002-Black-FB		per inch			Black Anodize						

* The above profiles are sold per inch or stock length.

** Or comparable

Standard Machining Services

Service No.	Series	Service Description	Reference Page
7005	10	Cut to Length	859
7051	10	Access Hole	863
7042	10	Anchor Counterbore	865
7061	10	Tap Profile End	861

1.00” X 1.00” Smooth Surface T-Slotted Profile - Three Adjacent Open T-Slots

1003-S Profile

1003-S is a 1.00” x 1.00” fractional 10 series square T-slot profile with three adjacent open T-slots, one on three 1.00” faces. The profile is smooth, which makes it resistant to dirt and debris buildup while also being easy to clean. The 1003-S profile is compatible with 10 series fasteners. The closed face on this profile provides a clean, aesthetic look and lends itself to work spaces, displays, or retail kiosks.

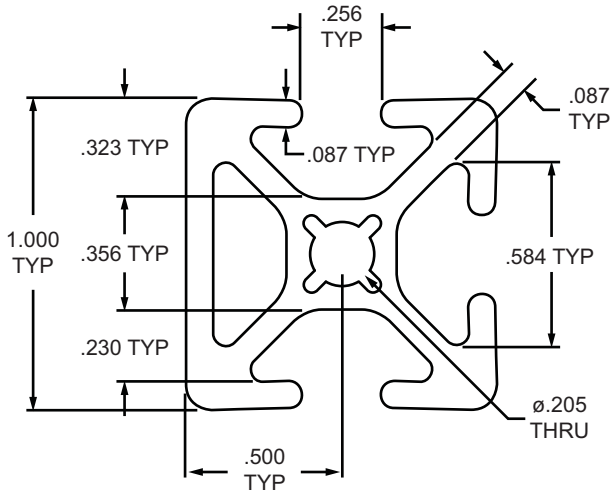

Part No.	Series	Stock Length	Material	Alloy**	Finish	Drop Lock	Moment of Inertia	Surface Area	Yield Strength	Modulus of Elasticity	Weight
1003-S *	10	145”, 242”	Aluminum	6105-T5	Clear Anodize	2°	IX = 0.0510in4 IY = 0.0463in4	0.461 in.2	35,000 psi	10,200,000 lb / in.2	0.0447 lb / in.
1003-S-Black-FB		per inch			Black Anodize						

* The above profiles are sold per inch or stock length.
** Or comparable

Standard Machining Services

Service No.	Series	Service Description	Reference Page
7005	10	Cut to Length	859
7051	10	Access Hole	863
7042	10	Anchor Counterbore	865
7061	10	Tap Profile End	861

1003 Profile

1003 is a 1.00” x 1.00” fractional 10 series square T-slot profile with three adjacent open T-slots, one on three 1.00” faces. The profile has align-a-grooves to assist in alignment when connecting profiles. The 1003 profile is compatible with 10 series fasteners. The closed face on this profile provides a clean, aesthetic look and lends itself to work spaces, displays, or retail kiosks.

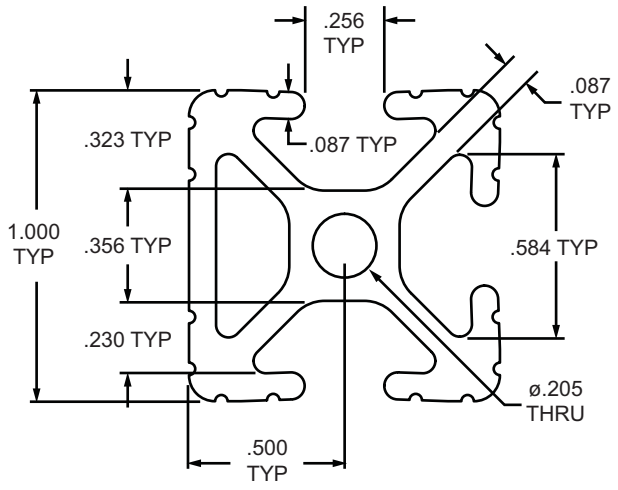

Part No.	Series	Stock Length	Material	Alloy**	Finish	Drop Lock	Moment of Inertia	Surface Area	Yield Strength	Modulus of Elasticity	Weight
1003 *	10	145”, 242”	Aluminum	6105-T5	Clear Anodize	2°	IX = 0.0441in4 IY = 0.0491in4	0.459 in.2	35,000 psi	10,200,000 lb / in.2	0.0448 lb / in.
1003-Black-FB		per inch			Black Anodize						

* The above profiles are sold per inch or stock length.

** Or comparable

Standard Machining Services

Service No.	Series	Service Description	Reference Page
7005	10	Cut to Length	859
7051	10	Access Hole	863
7042	10	Anchor Counterbore	865
7061	10	Tap Profile End	861

1.00” X 1.00” Smooth Surface T-Slotted Profile - Two Opposite Open T-Slots

1004-S Profile

1004-S is a 1.00” x 1.00” fractional 10 series square T-slot profile with two opposite open T-slots, one on two 1.00” faces. The profile is smooth, which makes it resistant to dirt and debris buildup while also being easy to clean. The 1004-S profile is compatible with 10 series fasteners. The placement of the T-slots allows support structures or large panels to be easily placed into them.

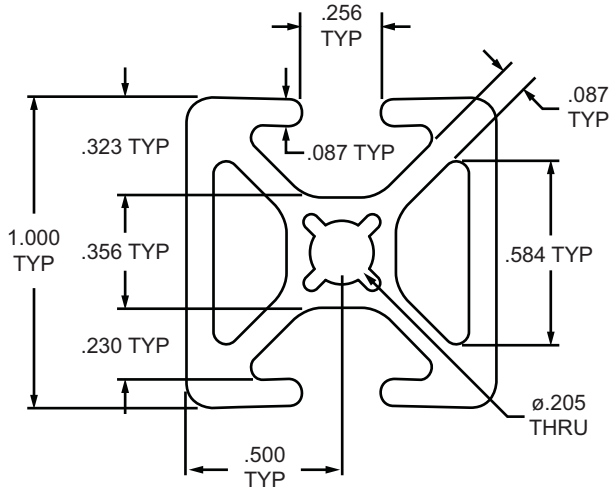

Part No.	Series	Stock Length	Material	Alloy**	Finish	Drop Lock	Moment of Inertia	Surface Area	Yield Strength	Modulus of Elasticity	Weight
1004-S *	10	145”, 242”	Aluminum	6105-T5	Clear Anodize	2°	IX = 0.0563”⁴ IY = 0.0467”⁴	0.484 in.²	35,000 psi	10,200,000 lb / in.²	0.0470 lb / in.
1004-S-Black-FB		per inch			Black Anodize						

* The above profiles are sold per inch or stock length.
** Or comparable

Standard Machining Services

Service No.	Series	Service Description	Reference Page
7005	10	Cut to Length	859
7051	10	Access Hole	863
7042	10	Anchor Counterbore	865
7061	10	Tap Profile End	861

1004 Profile

1004 is a 1.00” x 1.00” fractional 10 series square T-slot profile with two opposite open T-slots, one on two 1.00” faces. The profile has align-a-grooves to assist in alignment when connecting profiles. The 1004 profile is compatible with 10 series fasteners. The placement of the T-slots allows support structures or large panels to be easily placed into them while lending itself to projects such as guarding, furniture or displays.

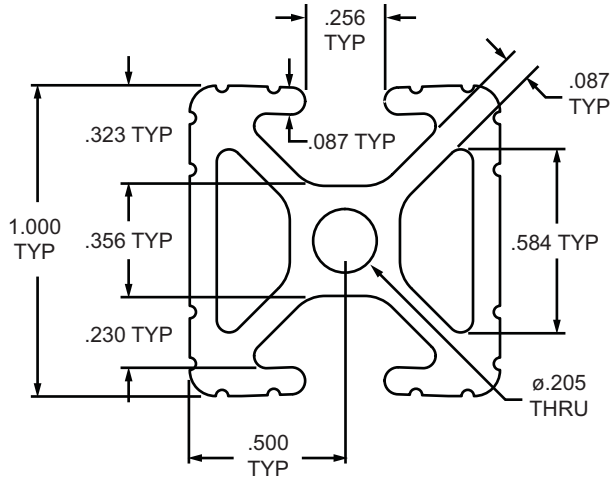

Part No.	Series	Stock Length	Material	Alloy**	Finish	Drop Lock	Moment of Inertia	Surface Area	Yield Strength	Modulus of Elasticity	Weight
1004 *	10	145”, 242”	Aluminum	6105-T5	Clear Anodize	2°	IX = 0.0443in4 IY = 0.0541in4	0.482 in.2	35,000 psi	10,200,000 lb / in.2	0.0470 lb / in.
1004-Black-FB		per inch			Black Anodize						

* The above profiles are sold per inch or stock length.
** Or comparable

Standard Machining Services

Service No.	Series	Service Description	Reference Page
7005	10	Cut to Length	859
7051	10	Access Hole	863
7042	10	Anchor Counterbore	865
7061	10	Tap Profile End	861

1.00” X 1.00” Smooth Surface Quarter Round T-Slotted Profile - Two Open T-Slots

1012-S Profile

1012-S is a 1.00” x 1.00” fractional 10 series quarter round T-slot profile with a .750” radius curved back and two open T-slots, one on each of the 1.00” profile faces. The profile is smooth, which makes it resistant to dirt and debris buildup while also being easy to clean. The 1012-S profile is compatible with 10 series fasteners. This profile allows structures or large panels to be easily placed into the open T-slots.

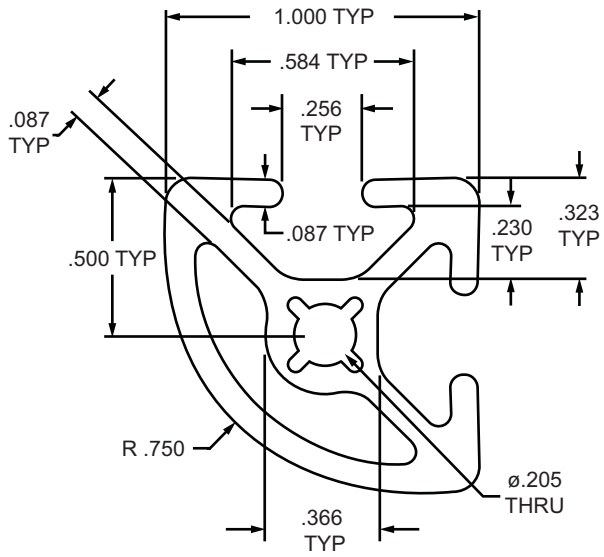

Part No.	Series	Stock Length	Material	Alloy**	Finish	Drop Lock	Moment of Inertia	Surface Area	Yield Strength	Modulus of Elasticity	Weight
1012-S *	10	145”, 242”	Aluminum	6105-T5	Clear Anodize	2°	IX = 0.0414"⁴ IY = 0.0414"⁴	0.423 in.²	35,000 psi	10,200,000 lb / in.²	0.0411 lb / in.
1012-S-Black-FB		per inch			Black Anodize						

* The above profiles are sold per inch or stock length.
** Or comparable

Standard Machining Services

Service No.	Series	Service Description	Reference Page
7005	10	Cut to Length	859
7051	10	Access Hole	863
7042	10	Anchor Counterbore	865
7061	10	Tap Profile End	861

1012 Profile

1012 is a 1.00” x 1.00” fractional 10 series quarter round T-slot profile with a .750” radius curved back and two open T-slots, one on each of the 1.00” profile faces. The profile has align-a-grooves to assist in aligning connecting profiles. The 1012 profile is compatible with 10 series fasteners. This profile allows structures or large panels to be easily placed into the open T-slots while lending itself to workstations, displays or exhibits.

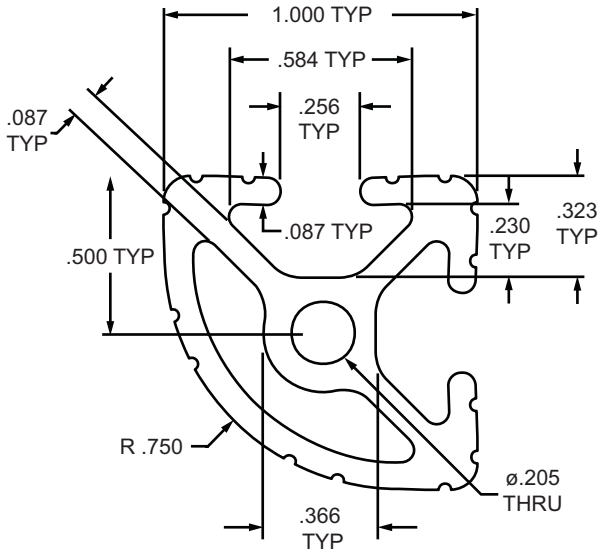

Part No.	Series	Stock Length	Material	Alloy**	Finish	Drop Lock	Moment of Inertia	Surface Area	Yield Strength	Modulus of Elasticity	Weight
1012 *	10	145”, 242”	Aluminum	6105-T5	Clear Anodize	2°	IX = 0.0400in4 IY = 0.0400in4	0.423 in.2	35,000 psi	10,200,000 lb / in.2	0.0413 lb / in.
1012-Black-FB		per inch			Black Anodize						

* The above profiles are sold per inch or stock length.

** Or comparable

Standard Machining Services

Service No.	Series	Service Description	Reference Page
7005	10	Cut to Length	859
7051	10	Access Hole	863
7042	10	Anchor Counterbore	865
7061	10	Tap Profile End	861

1.00” X 0.50” T-Slotted Profile - Single Open T-Slot

1050 Profile

1050 is a 1.00” x 0.50” fractional 10 series rectangular T-slot profile with one open T-slot on one 1.00” face. The profile has align-a-grooves to assist in alignment when connecting profiles. The 1050 profile is compatible with 10 series fasteners. It is a thinner profile that connects easily to flat surfaces and works well as a supporting structure or spacer for mounting accessories such as handles, door tracks, rails, valves or sensors.

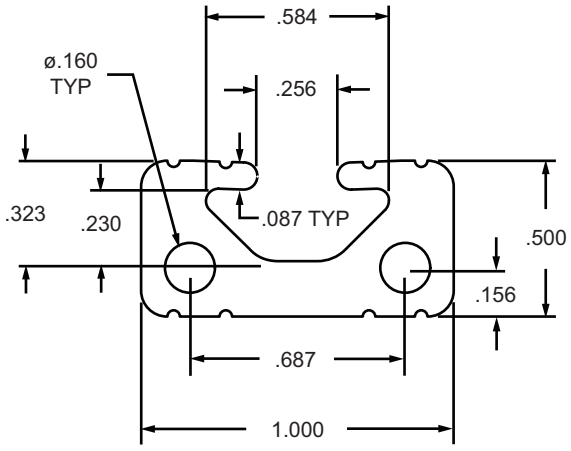

Part No.	Series	Stock Length	Material	Alloy**	Finish	Drop Lock	Moment of Inertia	Surface Area	Yield Strength	Modulus of Elasticity	Weight
1050 *	10	145”	Aluminum	6105-T5	Clear Anodize	2°	IX = 0.0074”⁴ IY = 0.0323”⁴	0.320 in.²	35,000 psi	10,200,000 lb / in.²	0.0312 lb / in.
1050-Black-FB		per inch			Black Anodize						

* The above profiles are sold per inch or stock length.
** Or comparable

Standard Machining Services

Service No.	Series	Service Description	Reference Page
7005	10	Cut to Length	859
7051	10	Access Hole	863
7042	10	Anchor Counterbore	865
7006	10	Tap Profile End	861
7256	10	Drill Thru & Counterbore	866

2.00” X .50” T-Slotted Profile - Two Adjacent Open T-Slots

2012 Profile

2012 is a 2.00” x 0.50” fractional 10 series rectangular T-slot profile with two adjacent open T-slots on a 2.00” face. The profile has align-a-grooves to assist in alignment when connecting profiles. The 2012 profile is compatible with 10 series fasteners. It is a thinner profile that connects easily to flat surfaces and works well as a supporting structure or spacer for mounting accessories such as handles, door tracks, rails or valves.

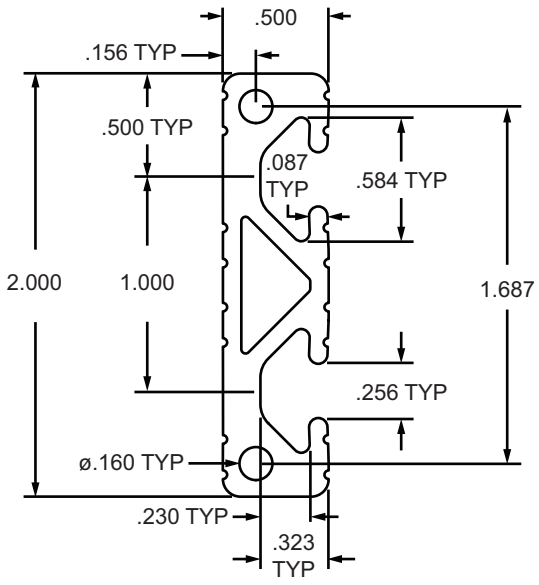

Part No.	Series	Stock Length	Material	Alloy**	Finish	Drop Lock	Moment of Inertia	Surface Area	Yield Strength	Modulus of Elasticity	Weight
2012 *	10	145”	Aluminum	6105-T5	Clear Anodize	2°	IX = 0.2253”⁴ IY = 0.0146”⁴	0.564 in.²	35,000 psi	10,200,000 lb / in.²	0.0550 lb / in.
2012-Black-FB		per inch			Black Anodize						

* The above profiles are sold per inch or stock length.

** Or comparable

Standard Machining Services

Service No.	Series	Service Description	Reference Page
7000	10	Cut to Length	859
7051	10	Access Hole	863
7042	10	Anchor Counterbore	865
7008	10	Tap Profile End	861
7256	10	Drill Thru & Counterbore	866

1.00” X 2.00” Smooth Surface T-Slotted Profile - Six Open T-Slots

1020-S Profile

1020-S is a 1.00” x 2.00” fractional 10 series rectangular T-slot profile with six open T-slots, one on each 1.00” face and two on each 2.00” face. The profile is smooth, which makes it resistant to dirt and debris buildup while also being easy to clean. The 1020-S profile is compatible with 10 series fasteners. The center cavity of the profile can be pressurized up to 150 psi, lending itself to work spaces, machine guards and panel mount racks.

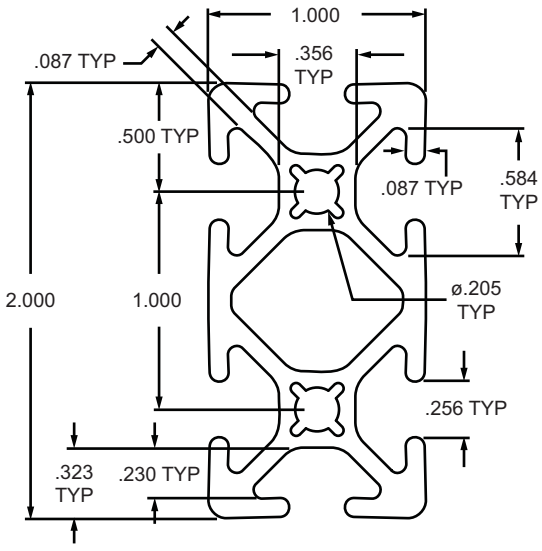

Part No.	Series	Stock Length	Material	Alloy**	Finish	Drop Lock	Moment of Inertia	Surface Area	Yield Strength	Modulus of Elasticity	Weight
1020-S *	10	145”, 242”	Aluminum	6105-T5	Clear Anodize	2°	IX = 0.0863in4 IY = 0.3084in4	0.786 in.2	35,000 psi	10,200,000 lb / in.2	0.0763 lb / in.
1020-S-Black-FB		per inch			Black Anodize						

* The above profiles are sold per inch or stock length.

** Or comparable

Standard Machining Services

Service No.	Series	Service Description	Reference Page
7000	10	Cut to Length	859
7051	10	Access Hole	863
7042	10	Anchor Counterbore	865
7046	10	Tap Profile End	861

1020 Profile

1020 is a 1.00” x 2.00” fractional 10 series rectangular T-slot profile with six open T-slots, one on each 1.00” face and two on each 2.00” face. The profile has align-a-grooves to assist in alignment when connecting profiles. The 1020 profile is compatible with 10 series fasteners. The center cavity of the profile can be pressurized up to 150 psi, lending itself to work spaces, machine guards, displays and panel mount racks.

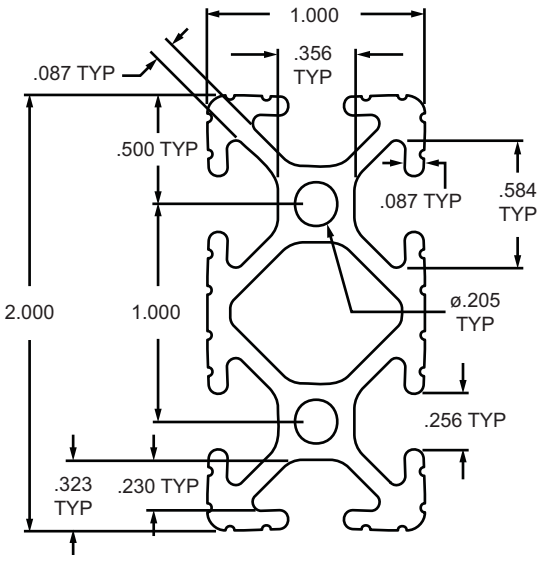

Part No.	Series	Stock Length	Material	Alloy**	Finish	Drop Lock	Moment of Inertia	Surface Area	Yield Strength	Modulus of Elasticity	Weight
1020 *	10	97”, 145”, 242”	Aluminum	6105-T5	Clear Anodize	2°	IX = 0.3078”⁴ IY = 0.0833”⁴	0.787 in.²	35,000 psi	10,200,000 lb / in.²	0.0768 lb / in.
1020-Black *		145”			Black Anodize						
1020-Black-FB		per inch			Black Anodize						

* The above profiles are sold per inch or stock length.
** Or comparable

Standard Machining Services

Service No.	Series	Service Description	Reference Page
7000	10	Cut to Length	859
7051	10	Access Hole	863
7042	10	Anchor Counterbore	865
7046	10	Tap Profile End	861

1.00” X 3.00” Smooth Surface T-Slotted Profile - Eight Open T-Slots

1030-S Profile

1030-S is a 1.00” x 3.00” fractional 10 series rectangular T-slot profile with eight open T-slots, one on each 1.00” face and three on each 3.00” face. The profile is smooth, which makes it resistant to dirt and debris buildup while also being easy to clean. The 1030-S profile is compatible with 10 series fasteners and has center cavities that can be pressurized up to 150 psi. The eight open T-slots make this profile great for mounting accessories, flat plates and hinges while the ability to pressurize it lends it to linear motion or machine frames.

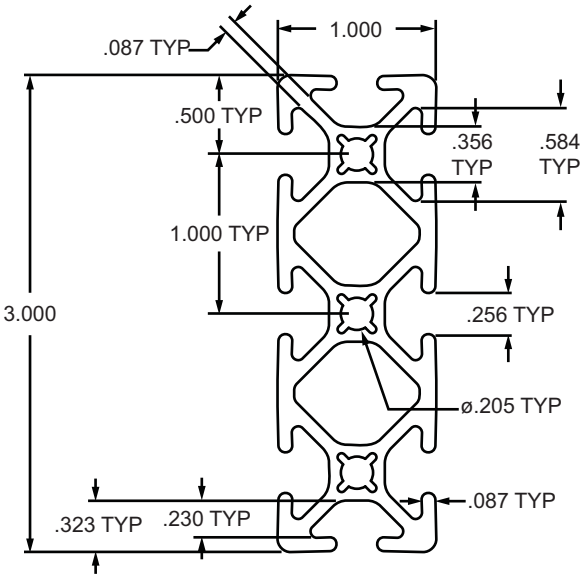

Part No.	Series	Stock Length	Material	Alloy**	Finish	Drop Lock	Moment of Inertia	Surface Area	Yield Strength	Modulus of Elasticity	Weight
1030-S *	10	145”, 242”	Aluminum	6105-T5	Clear Anodize	2°	IX = 0.1262in^4 IY = 0.9599in^4	1.135 in.^2	35,000 psi	10,200,000 lb / in.^2	0.1101 lb / in.
1030-S-Black-FB		per inch			Black Anodize						

* The above profiles are sold per inch or stock length.
** Or comparable

Standard Machining Services

Service No.	Series	Service Description	Reference Page
7003	10	Cut to Length	859
7051	10	Access Hole	863
7042	10	Anchor Counterbore	865
7036	10	Tap Profile End	861

1030 Profile

1030 is a 1.00” x 3.00” fractional 10 series rectangular T-slot profile with eight open T-slots, one on each 1.00” face and three on each 3.00” face. The profile has align-a-grooves to assist in alignment when connecting profiles. The 1030 profile is compatible with 10 series fasteners and has center cavities that can be pressurized up to 150 psi The eight open T-slots make this profile great for mounting accessories, flat plates and hinges while the ability to pressurize it lends it to projects involving linear motion or machine frames.

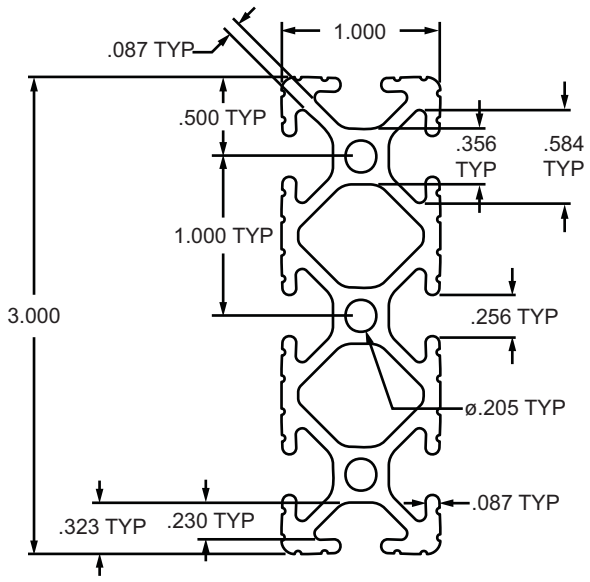

Part No.	Series	Stock Length	Material	Alloy**	Finish	Drop Lock	Moment of Inertia	Surface Area	Yield Strength	Modulus of Elasticity	Weight
1030 *	10	145”, 242”	Aluminum	6105-T5	Clear Anodize	2°	IX = 0.9711”⁴ IY = 0.1238”⁴	1.140 in.²	35,000 psi	10,200,000 lb / in.²	0.1112 lb / in.
1030-Black-FB		per inch			Black Anodize						

* The above profiles are sold per inch or stock length.
** Or comparable

Standard Machining Services

Service No.	Series	Service Description	Reference Page
7003	10	Cut to Length	859
7051	10	Access Hole	863
7042	10	Anchor Counterbore	865
7036	10	Tap Profile End	861

2.00” X 2.00” Smooth Surface T-Slotted Profile - Eight Open T-Slots

2020-S Profile

2020-S is a 2.00” x 2.00” fractional 10 series square T-slot profile with eight open T-slots, two on each 2.00” face. The profile is smooth, which makes it resistant to dirt and debris buildup while also being easy to clean. The 2020-S profile is compatible with 10 series fasteners and has a center cavity that can be pressurized up to 150 psi. The eight open T-slots, strength, and ability to pressurize this profile make it a great choice for automation applications, machine frames and workstations.

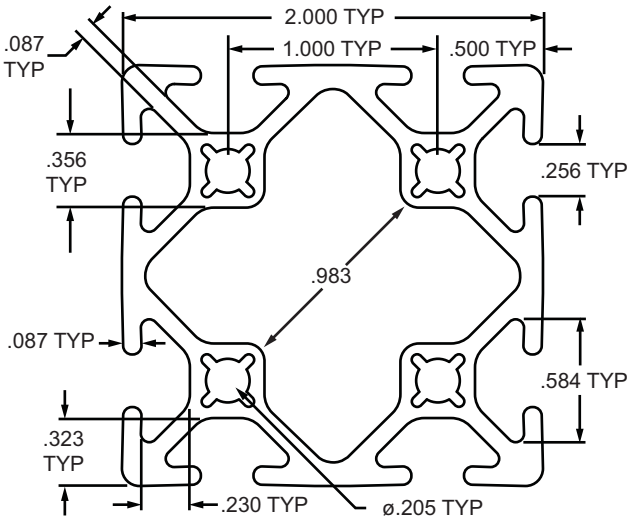

Part No.	Series	Stock Length	Material	Alloy**	Finish	Drop Lock	Moment of Inertia	Surface Area	Yield Strength	Modulus of Elasticity	Weight
2020-S *	10	145”, 242”	Aluminum	6105-T5	Clear Anodize	2°	IX = 0.5545in4 IY = 0.5545in4	1.216 in.2	35,000 psi	10,200,000 lb / in.2	0.1179 lb / in.
2020-S-Black-FB		per inch			Black Anodize						

* The above profiles are sold per inch or stock length.
** Or comparable

Standard Machining Services

Service No.	Series	Service Description	Reference Page
7012	10	Cut to Length	859
7051	10	Access Hole	863
7042	10	Anchor Counterbore	865
7064	10	Tap Profile End	861

2020 Profile

2020 is a 2.00" x 2.00" fractional 10 series square T-slot profile with eight open T-slots, two on each 2.00" face. The profile has align-a-grooves to assist in alignment when connecting profiles. The 2020 profile is compatible with 10 series fasteners and has a center cavity that can be pressurized up to 150 psi. The eight open T-slots, strength, and ability to pressurize this profile make it a great choice for automation applications, machine frames and workstations.

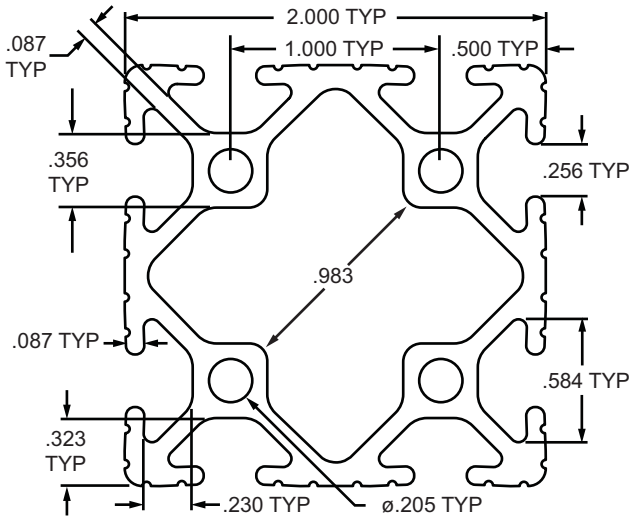

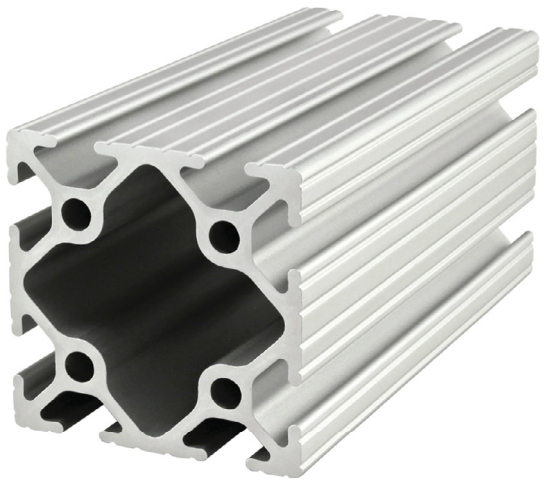

Part No.	Series	Stock Length	Material	Alloy**	Finish	Drop Lock	Moment of Inertia	Surface Area	Yield Strength	Modulus of Elasticity	Weight
2020 *	10	145", 242"	Aluminum	6105-T5	Clear Anodize	2°	IX = 0.5509"⁴ IY = 0.5509"⁴	1.228 in.²	35,000 psi	10,200,000 lb / in.²	0.1198 lb / in.
2020-Black *		145"			Black Anodize						
2020-Black-FB		per inch			Black Anodize						

* The above profiles are sold per inch or stock length.
** Or comparable

Standard Machining Services

Service No.	Series	Service Description	Reference Page
7012	10	Cut to Length	859
7051	10	Access Hole	863
7042	10	Anchor Counterbore	865
7064	10	Tap Profile End	861

2.00” X 4.00” Smooth Surface T-Slotted Profile - Twelve Open T-Slots

2040-S Profile

2040-S is a 2.00” x 4.00” fractional 10 series rectangular T-slot profile with twelve open T-slots, two on each 2.00” face and four on each 4.00” face. The profile is smooth, which makes it resistant to dirt and debris buildup while also being easy to clean. The 2040-S profile is compatible with 10 series fasteners and has center cavities that can be pressurized up to 150 psi. The twelve open T-slots, strength, and ability to pressurize this profile make it a great choice for automation applications, machine frames and workstations.

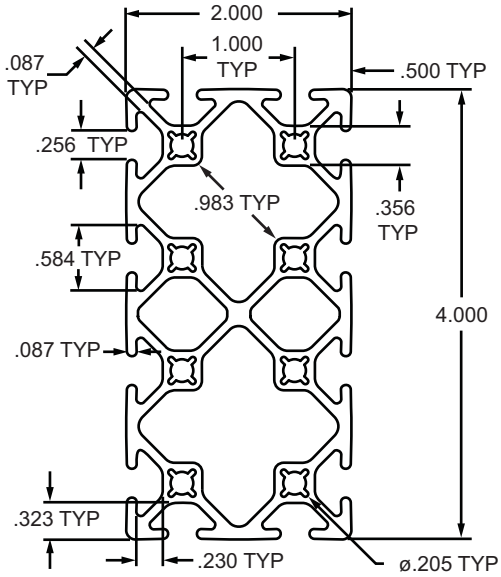

Part No.	Series	Stock Length	Material	Alloy**	Finish	Drop Lock	Moment of Inertia	Surface Area	Yield Strength	Modulus of Elasticity	Weight
2040-S *	10	145”, 242”	Aluminum	6105-T5	Clear Anodize	2°	IX = 1.0543in4 IY = 3.5123in4	2.255 in.2	35,000 psi	10,200,000 lb / in.2	0.2188 lb / in.
2040-S-Black-FB		per inch			Black Anodize						

* The above profiles are sold per inch or stock length.

** Or comparable

Standard Machining Services

Service No.	Series	Service Description	Reference Page
7013	10	Cut to Length	859
7051	10	Access Hole	863
7042	10	Anchor Counterbore	865
7038	10	Tap Profile End	861

2040 Profile

2040 is a 2.00” x 4.00” fractional 10 series rectangular T-slot profile with twelve open T-slots, two on each 2.00” face and four on each 4.00” face. The profile has align-a-grooves to assist in alignment when connecting profiles. The 2040 profile is compatible with 10 series fasteners and has center cavities that can be pressurized up to 150 psi. The twelve open T-slots, strength, and ability to pressurize this profile make it a great choice for automation applications, machine frames and workstations.

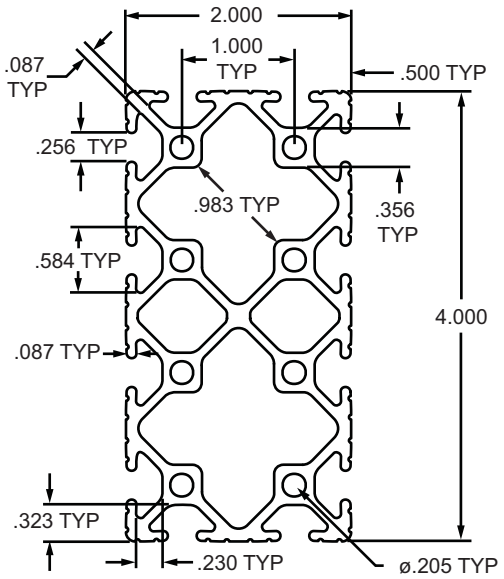

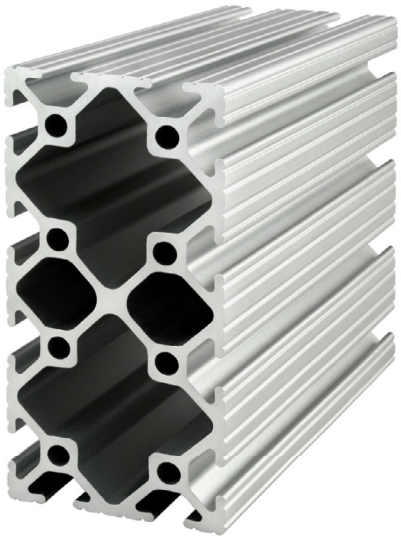

Part No.	Series	Stock Length	Material	Alloy**	Finish	Drop Lock	Moment of Inertia	Surface Area	Yield Strength	Modulus of Elasticity	Weight
2040 *	10	145”, 242”	Aluminum	6105-T5	Clear Anodize	2°	IX = 3.5168in4 IY = 1.0513in4	2.290 in.2	35,000 psi	10,200,000 lb / in.2	0.2233 lb / in.
2040-Black-FB		per inch			Black Anodize						

* The above profiles are sold per inch or stock length.

** Or comparable

Standard Machining Services

Service No.	Series	Service Description	Reference Page
7013	10	Cut to Length	859
7051	10	Access Hole	863
7042	10	Anchor Counterbore	865
7038	10	Tap Profile End	861

1.50” X 1.50” Ultra-Lite Smooth Surface T-Slotted Profile - Four Open T-Slots

1515-ULS Profile

1515-ULS is a 1.50” x 1.50” ultra-lite fractional 15 series square T-slot profile with four open T-slots, one on each 1.50” face. The profile is smooth, which makes it resistant to dirt and debris buildup while also being easy to clean. The 1515-ULS profile is compatible with all 15 series fasteners. This profile lends itself to clean room applications, guards, enclosures, or workstations. The four open T-slots enable access from any direction and are useful for mounting accessories.

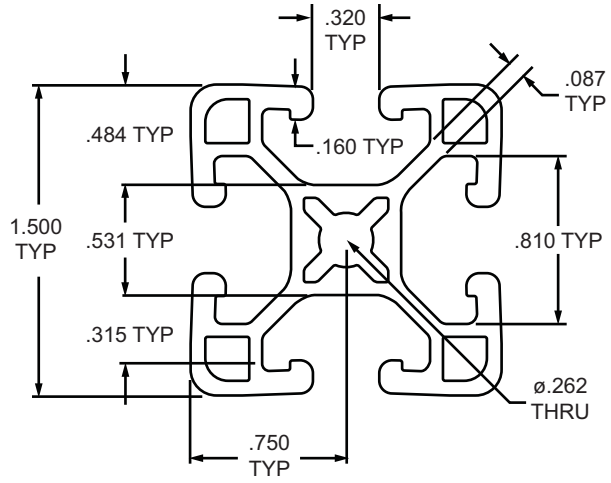

Part No.	Series	Stock Length	Material	Alloy**	Finish	Drop Lock	Moment of Inertia	Surface Area	Yield Strength	Modulus of Elasticity	Weight
1515-ULS *	15	145”, 242”	Aluminum	6105-T5	Clear Anodize	2°	IX = 0.1765in4 IY = 0.1765in4	2.290 in.2	35,000 psi	10,200,000 lb / in.2	0.0790 lb / in.
1515-ULS-Black *	15	145”	Aluminum	6105-T5	Black Anodize	2°	IX = 0.1765in4 IY = 0.1765in4	2.290 in.2	35,000 psi	10,200,000 lb / in.2	0.0790 lb / in.
1515-ULS-Black-FB	15	per inch	Aluminum	6105-T5	Black Anodize	2°	IX = 0.1765in4 IY = 0.1765in4	2.290 in.2	35,000 psi	10,200,000 lb / in.2	0.0790 lb / in.

* The above profiles are sold per inch or stock length.
** Or comparable

Standard Machining Services

Service No.	Series	Service Description	Reference Page
7010	15	Cut to Length	859
7050	15	Access Hole	863
7040	15	Anchor Counterbore	865
7060	15	Tap Profile End	861

1.50" X 1.50" Ultra-Lite T-Slotted Profile - Four Open T-Slots

1515-UL Profile

1515-UL is a 1.50" x 1.50" ultra-lite fractional 15 series square T-slot profile with four open T-slots, one on each 1.50" face. The profile has align-a-grooves to assist in alignment when connecting profiles. The 1515-UL profile is compatible with all 15 series fasteners. The 1515-UL profile is the lightest in the 1515 profile family and lends itself to machine guards, sound enclosures, work benches, panel mount racks or displays. The four open T-slots enable access from any direction and are useful for mounting accessories.

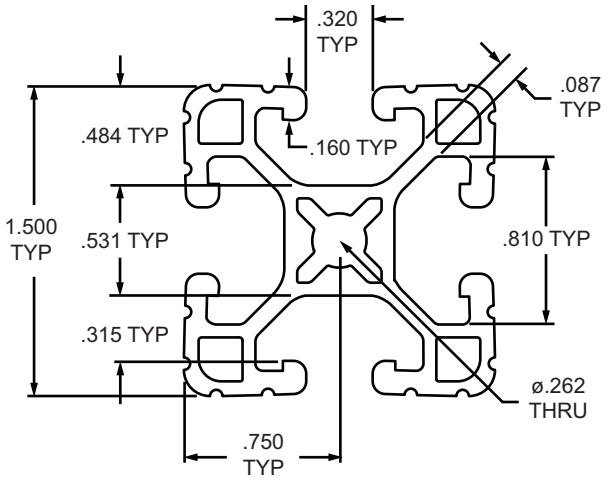

Part No.	Series	Stock Length	Material	Alloy**	Finish	Drop Lock	Moment of Inertia	Surface Area	Yield Strength	Modulus of Elasticity	Weight
1515-UL *	15	145", 242"	Aluminum	6105-T5	Clear Anodize	2°	IX = 0.1772"⁴ IY = 0.1772"⁴	0.787 in.²	35,000 psi	10,200,000 lb / in.²	0.0768 lb / in.
1515-UL-Black *		145"			Black Anodize						
1515-UL-Black-FB		per inch			Black Anodize						

* The above profiles are sold per inch or stock length.

** Or comparable

Standard Machining Services

Service No.	Series	Service Description	Reference Page
7010	15	Cut to Length	859
7050	15	Access Hole	863
7040	15	Anchor Counterbore	865
7060	15	Tap Profile End	861

1.50” X 1.50” Lite Smooth Surface T-Slotted Profile - Four Open T-Slots

1515-LS Profile

1515-LS is a 1.50” x 1.50” lite fractional 15 series square T-slot profile with four open T-slots, one on each 1.50” face. The profile is smooth, which makes it resistant to dirt and debris buildup while also being easy to clean. The 1515-LS profile is compatible with all 15 series fasteners. This profile lends itself to clean room applications, guards, enclosures, or workstations. The four open T-slots enable access from any direction and are useful for mounting accessories.

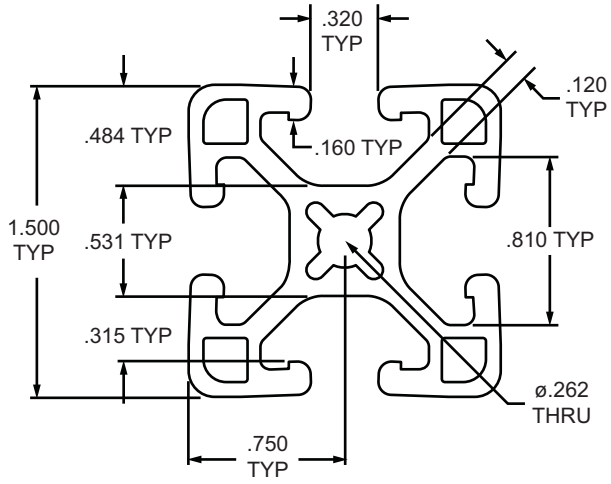

Part No.	Series	Stock Length	Material	Alloy**	Finish	Drop Lock	Moment of Inertia	Surface Area	Yield Strength	Modulus of Elasticity	Weight
1515-LS *	15	145”, 242”	Aluminum	6105-T5	Clear Anodize	2°	IX = 0.1921^{*4} IY = 0.1921^{*4}	0.882 in.^{2}	35,000 psi	10,200,000 lb / in.^{2}	0.0860 lb / in.
1515-LS-Black *		145”			Black Anodize						
1515-LS-Black-FB		per inch			Black Anodize						

* The above profiles are sold per inch or stock length.
** Or comparable

Standard Machining Services

Service No.	Series	Service Description	Reference Page
7010	15	Cut to Length	859
7050	15	Access Hole	863
7040	15	Anchor Counterbore	865
7060	15	Tap Profile End	861

1515-Lite Profile

1515-Lite is a 1.50” x 1.50” lite fractional 15 series square T-slot profile with four open T-slots, one on each 1.50” face. The profile has align-a-grooves to assist in alignment when connecting profiles. The 1515-Lite profile is compatible with all 15 series fasteners. This profile lends itself to machine guards, enclosures or work benches. The four open T-slots enable access from any direction and are useful for mounting accessories.

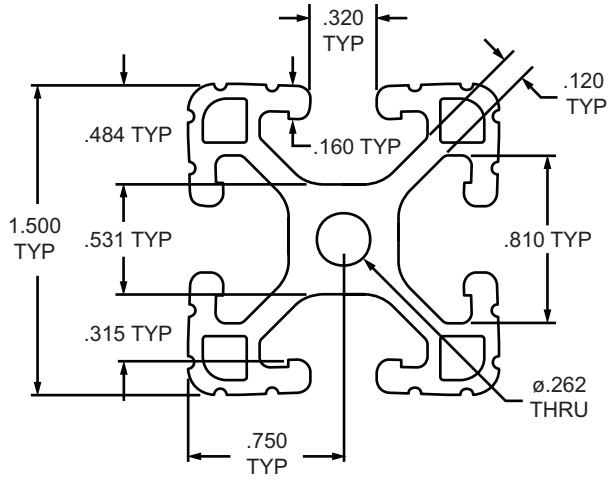

Part No.	Series	Stock Length	Material	Alloy**	Finish	Drop Lock	Moment of Inertia	Surface Area	Yield Strength	Modulus of Elasticity	Weight
1515-Lite *	15	97”, 145”, 242”	Aluminum	6105-T5	Clear Anodize	2°	IX = 0.1853^{*4} IY = 0.1853^{*4}	0.896 in.^{2}	35,000 psi	10,200,000 lb / in.^{2}	0.0873 lb / in.
1515-Lite-Black *		145”			Black Anodize						
1515-Lite-Black-FB		per inch			Black Anodize						
1515-Lite-Yellow *		145”			Yellow Powder Coat						

* The above profiles are sold per inch or stock length.

** Or comparable

Standard Machining Services

Service No.	Series	Service Description	Reference Page
7010	15	Cut to Length	859
7050	15	Access Hole	863
7040	15	Anchor Counterbore	865
7060	15	Tap Profile End	861

1.50” X 1.50” Smooth Surface T-Slotted Profile - Four Open T-Slots

1515-S Profile

1515-S is a 1.50” x 1.50” fractional 15 series square T-slot profile with four open T-slots, one on each 1.50” face. The profile is smooth, which makes it resistant to dirt and debris buildup while also being easy to clean. The 1515-S profile is compatible with all 15 series fasteners. This profile is the most heavy-duty in the 1515 profile family and lends itself to clean room applications, guards, enclosures, or workstations.

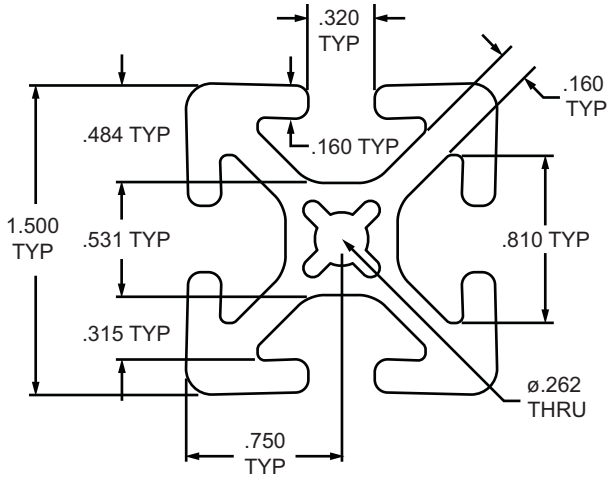

Part No.	Series	Stock Length	Material	Alloy**	Finish	Drop Lock	Moment of Inertia	Surface Area	Yield Strength	Modulus of Elasticity	Weight
1515-S *	15	145”, 242”	Aluminum	6105-T5	Clear Anodize	2°	IX = 0.2631”⁴ IY = 0.2631”⁴	1.138 in.²	35,000 psi	10,200,000 lb / in.²	0.1109 lb / in.
1515-S-Black *		145”			Black Anodize						
1515-S-Black-FB		per inch			Black Anodize						

* The above profiles are sold per inch or stock length.

** Or comparable

Standard Machining Services

Service No.	Series	Service Description	Reference Page
7010	15	Cut to Length	859
7050	15	Access Hole	863
7040	15	Anchor Counterbore	865
7060	15	Tap Profile End	861

1515 Profile

1515 is a 1.50" x 1.50" fractional 15 series square T-slot profile with four open T-slots, one on each 1.50" face. The profile has align-a-grooves to assist in alignment when connecting profiles. The 1515 profile is compatible with all 15 series fasteners. This profile is the most heavy-duty in the 1515 profile family and lends itself to machine frames, guarding applications, enclosures, or desks.

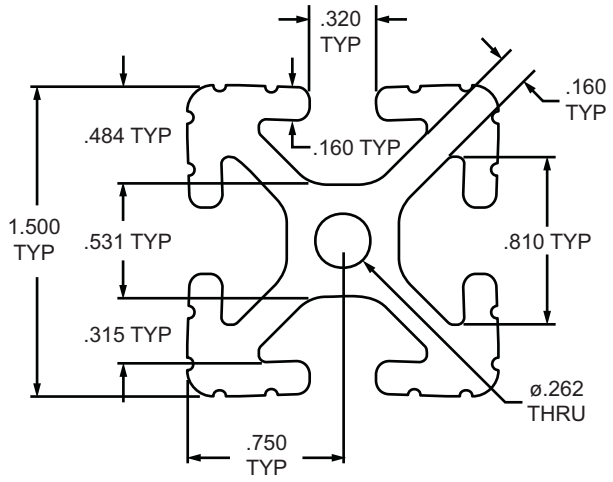

Part No.	Series	Stock Length	Material	Alloy**	Finish	Drop Lock	Moment of Inertia	Surface Area	Yield Strength	Modulus of Elasticity	Weight
1515 *	15	97", 145", 242"	Aluminum	6105-T5	Clear Anodize	2°	IX = 0.2542"⁴ IY = 0.2542"⁴	1.152 in.²	35,000 psi	10,200,000 lb / in.²	0.1123 lb / in.
1515-Black *	15	145"	Aluminum	6105-T5	Black Anodize	2°	IX = 0.2542"⁴ IY = 0.2542"⁴	1.152 in.²	35,000 psi	10,200,000 lb / in.²	0.1123 lb / in.
1515-Black-FB	15	per inch	Aluminum	6105-T5	Black Anodize	2°	IX = 0.2542"⁴ IY = 0.2542"⁴	1.152 in.²	35,000 psi	10,200,000 lb / in.²	0.1123 lb / in.

* The above profiles are sold per inch or stock length.
** Or comparable

Standard Machining Services

Service No.	Series	Service Description	Reference Page
7010	15	Cut to Length	859
7050	15	Access Hole	863
7040	15	Anchor Counterbore	865
7060	15	Tap Profile End	861

1.50” X 1.50” Lite Smooth Surface T-Slotted Profile - Single Open T-Slot

1501-LS Profile

1501-LS is a 1.50” x 1.50” lite fractional 15 series square T-slot profile with one open T-slot on one 1.50” face. The profile is smooth, which makes it resistant to dirt and debris buildup while also being easy to clean. The 1501-LS profile is compatible with 15 series fasteners. The three closed faces on this profile provide a clean, aesthetic look and lends itself to furniture, displays, desks, trade show booths, or retail kiosks.

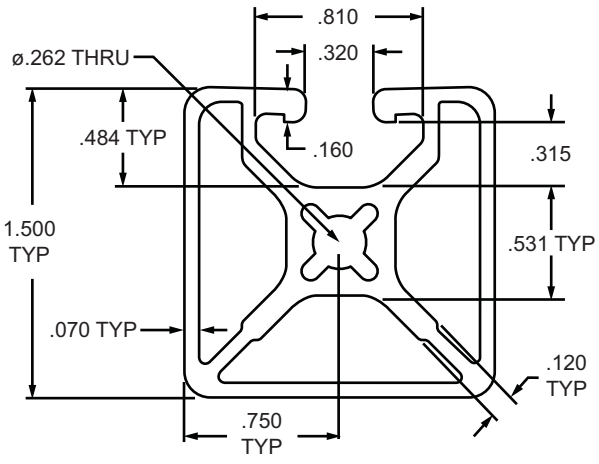

Part No.	Series	Stock Length	Material	Alloy**	Finish	Drop Lock	Moment of Inertia	Surface Area	Yield Strength	Modulus of Elasticity	Weight
1501-LS *	15	145”, 242”	Aluminum	6105-T5	Clear Anodize	2°	IX = 0.1820”^4 IY = 0.1799”^4	0.815 in.^2	35,000 psi	10,200,000 lb / in.^2	0.0788 lb / in.
1501-LS-Black-FB		per inch			Black Anodize						

* The above profiles are sold per inch or stock length.
** Or comparable

Standard Machining Services

Service No.	Series	Service Description	Reference Page
7010	15	Cut to Length	859
7050	15	Access Hole	863
7040	15	Anchor Counterbore	865
7060	15	Tap Profile End	861

1501 Profile

1501 is a 1.50” x 1.50” fractional 15 series square T-slot profile with one open T-slot on one 1.50” face. The profile has align-a-grooves to assist in alignment when connecting profiles. The 1501 profile is compatible with 15 series fasteners. The three closed faces on this profile provide a clean, aesthetic look and lends itself to furniture, displays, desks, trade show booths, or retail kiosks.

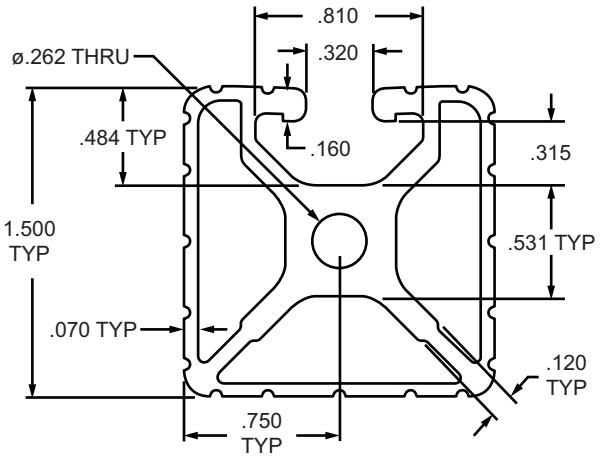

Part No.	Series	Stock Length	Material	Alloy**	Finish	Drop Lock	Moment of Inertia	Surface Area	Yield Strength	Modulus of Elasticity	Weight
1501 *	15	145”, 242”	Aluminum	6105-T5	Clear Anodize	2°	IX = 0.1726in4 IY = 0.1694in4	0.826 in.2	35,000 psi	10,200,000 lb / in.2	0.0805 lb / in.
1501-Black-FB		per inch			Black Anodize						

* The above profiles are sold per inch or stock length.

** Or comparable

Standard Machining Services

Service No.	Series	Service Description	Reference Page
7010	15	Cut to Length	859
7050	15	Access Hole	863
7040	15	Anchor Counterbore	865
7060	15	Tap Profile End	861

1.50” X 1.50” Lite Smooth Surface T-Slotted Profile - Two Adjacent Open T-Slots

1502-LS Profile

1502-LS is a 1.50” x 1.50” lite fractional 15 series square T-slot profile with two adjacent open T-slots, one on two 1.50” faces. The profile is smooth, which makes it resistant to dirt and debris buildup while also being easy to clean. The 1502-LS profile is compatible with 15 series fasteners. The two closed faces on this profile provide a clean, aesthetic look and lends itself to furniture, displays, desks, trade show booths, or retail kiosks.

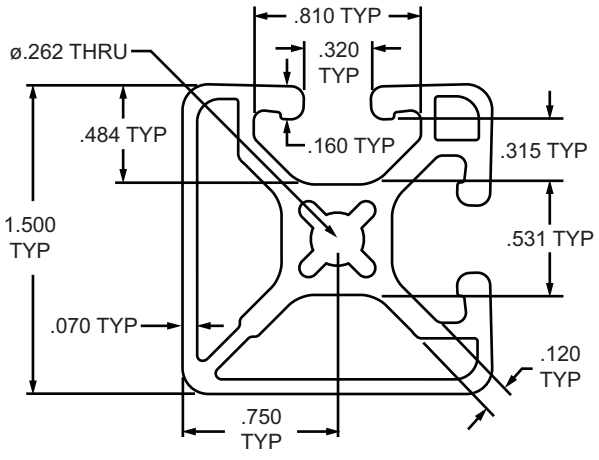

Part No.	Series	Stock Length	Material	Alloy**	Finish	Drop Lock	Moment of Inertia	Surface Area	Yield Strength	Modulus of Elasticity	Weight
1502-LS *	15	145”, 242”	Aluminum	6105-T5	Clear Anodize	2°	IX = 0.1834in4 IY = 0.1834in4	0.832 in.2	35,000 psi	10,200,000 lb / in.2	0.0811 lb / in.
1502-LS-Black-FB		per inch			Black Anodize						

* The above profiles are sold per inch or stock length.

** Or comparable

Standard Machining Services

Service No.	Series	Service Description	Reference Page
7010	15	Cut to Length	859
7050	15	Access Hole	863
7040	15	Anchor Counterbore	865
7060	15	Tap Profile End	861

1502 Profile

1502 is a 1.50" x 1.50" fractional 15 series square T-slot profile with two adjacent open T-slots, one on two 1.50" faces. The profile has align-a-grooves to assist in alignment when connecting profiles. The 1502 profile is compatible with 15 series fasteners. The two closed faces on this profile provide a clean, aesthetic look and lends itself to furniture, displays, desks, trade show booths, or retail kiosks.

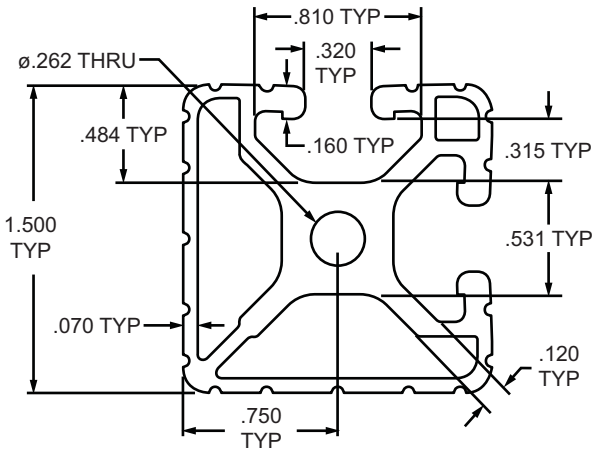

Part No.	Series	Stock Length	Material	Alloy**	Finish	Drop Lock	Moment of Inertia	Surface Area	Yield Strength	Modulus of Elasticity	Weight
1502 *	15	145", 242"	Aluminum	6105-T5	Clear Anodize	2°	IX = 0.1660"⁴ IY = 0.1730"⁴	0.844 in.²	35,000 psi	10,200,000 lb / in.²	0.0823 lb / in.
1502-Black-FB		per inch			Black Anodize						

* The above profiles are sold per inch or stock length.
** Or comparable

Standard Machining Services

Service No.	Series	Service Description	Reference Page
7010	15	Cut to Length	859
7050	15	Access Hole	863
7040	15	Anchor Counterbore	865
7060	15	Tap Profile End	861

1.50” X 1.50” Lite Smooth Surface T-Slotted Profile - Three Adjacent Open T-Slots

1503-LS Profile

1503-LS is a 1.50” x 1.50” lite fractional 15 series square T-slot profile with three adjacent open T-slots, one on three 1.50” faces. The profile is smooth, which makes it resistant to dirt and debris buildup while also being easy to clean. The 1503-LS profile is compatible with 15 series fasteners. The closed face on this profile provides a clean, aesthetic look and lends itself to work spaces, displays, or retail kiosks.

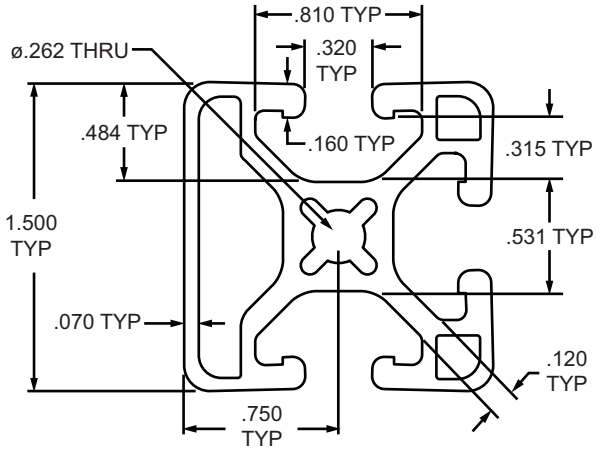

Part No.	Series	Stock Length	Material	Alloy**	Finish	Drop Lock	Moment of Inertia	Surface Area	Yield Strength	Modulus of Elasticity	Weight
1503-LS *	15	145”, 242”	Aluminum	6105-T5	Clear Anodize	2°	IX = 0.1859in4 IY = 0.1840in4	0.848 in.2	35,000 psi	10,200,000 lb / in.2	0.0827 lb / in.
1503-LS-Black-FB		per inch			Black Anodize						

* The above profiles are sold per inch or stock length.
** Or comparable

Standard Machining Services

Service No.	Series	Service Description	Reference Page
7010	15	Cut to Length	859
7050	15	Access Hole	863
7040	15	Anchor Counterbore	865
7060	15	Tap Profile End	861

1503 Profile

1503 is a 1.50" x 1.50" fractional 15 series square T-slot profile with three adjacent open T-slots, one on three 1.50" faces. The profile has align-a-grooves to assist in alignment when connecting profiles. The 1503 profile is compatible with 15 series fasteners. The closed face on this profile provides a clean, aesthetic look and lends itself to work spaces, displays, or retail kiosks.

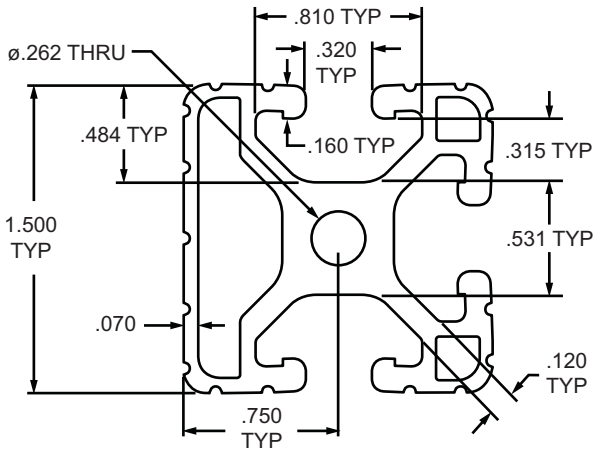

Part No.	Series	Stock Length	Material	Alloy**	Finish	Drop Lock	Moment of Inertia	Surface Area	Yield Strength	Modulus of Elasticity	Weight
1503 *	15	145", 242"	Aluminum	6105-T5	Clear Anodize	2°	IX = 0.1760^{in4} IY = 0.1790^{in4}	0.862 $in.^2$	35,000 psi	10,200,000 lb / $in.^2$	0.0840 lb / in.
1503-Black-FB		per inch			Black Anodize						

* The above profiles are sold per inch or stock length.

** Or comparable

Standard Machining Services

Service No.	Series	Service Description	Reference Page
7010	15	Cut to Length	859
7050	15	Access Hole	863
7040	15	Anchor Counterbore	865
7060	15	Tap Profile End	861

1.50” X 1.50” Lite Smooth Surface T-Slotted Profile - Two Opposite Open T-Slots

1504-LS Profile

1504-LS is a 1.50” x 1.50” lite fractional 15 series square T-slot profile with two opposite open T-slots, one on two 1.50” faces. The profile is smooth, which makes it resistant to dirt and debris buildup while also being easy to clean. The 1504-LS profile is compatible with 15 series fasteners. The placement of the T-slots allow support structures or panels to be easily placed into them and lends itself to guarding, furniture or displays.

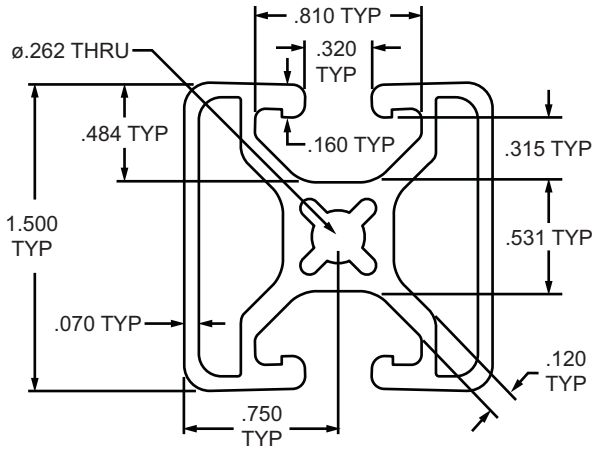

Part No.	Series	Stock Length	Material	Alloy**	Finish	Drop Lock	Moment of Inertia	Surface Area	Yield Strength	Modulus of Elasticity	Weight
1504-LS *	15	145”, 242”	Aluminum	6105-T5	Clear Anodize	2°	IX = 0.1796in4 IY = 0.1759in4	0.815 in.2	35,000 psi	10,200,000 lb / in.2	0.0795 lb / in.
1504-LS-Black-FB		per inch			Black Anodize						

* The above profiles are sold per inch or stock length.

** Or comparable

Standard Machining Services

Service No.	Series	Service Description	Reference Page
7010	15	Cut to Length	859
7050	15	Access Hole	863
7040	15	Anchor Counterbore	865
7060	15	Tap Profile End	861

1.50" X 1.50" T-Slotted Profile - Two Opposite Open T-Slots

1504 Profile

1504 is a 1.50" x 1.50" fractional 15 series square T-slot profile with two opposite open T-slots, one on two 1.50" faces. The profile has align-a-grooves to assist in alignment when connecting profiles. The 1504 profile is compatible with 15 series fasteners. The placement of the T-slots allows support structures or panels to be easily placed into them and lends itself to guarding, furniture or displays.

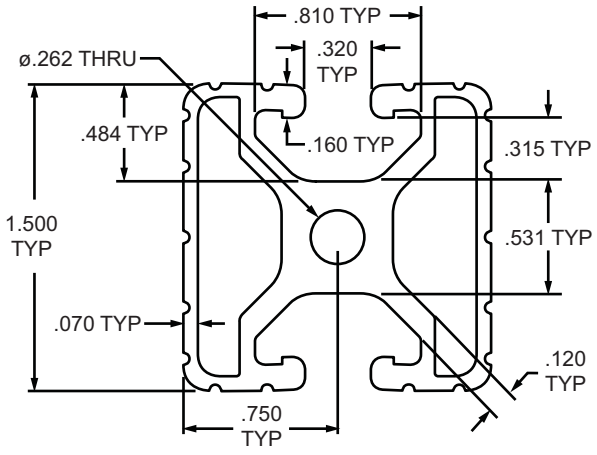

Part No.	Series	Stock Length	Material	Alloy**	Finish	Drop Lock	Moment of Inertia	Surface Area	Yield Strength	Modulus of Elasticity	Weight
1504 *	15	145", 242"	Aluminum	6105-T5	Clear Anodize	2°	IX = 0.1729in4 IY = 0.1665in4	0.827 in.2	35,000 psi	10,200,000 lb / in.2	0.0807 lb / in.
1504-Black-FB		per inch			Black Anodize						

* The above profiles are sold per inch or stock length.

** Or comparable

Standard Machining Services

Service No.	Series	Service Description	Reference Page
7010	15	Cut to Length	859
7050	15	Access Hole	863
7040	15	Anchor Counterbore	865
7060	15	Tap Profile End	861

1.50” X 1.50” 45 Degree Closed Side T-Slotted Profile - Two Adjacent Open T-Slots

1547 Profile

1547 is a 1.50” x 1.50” fractional 15 series 45 degree closed back T-slot profile with two open T-slots, one on each of the 1.50” profile faces. The profile has align-a-grooves to assist in alignment when connecting profiles. The 1547 profile is compatible with 15 series fasteners. This profile lends itself to workstations and displays because panels or other support structures can be easily placed in the T-slots.

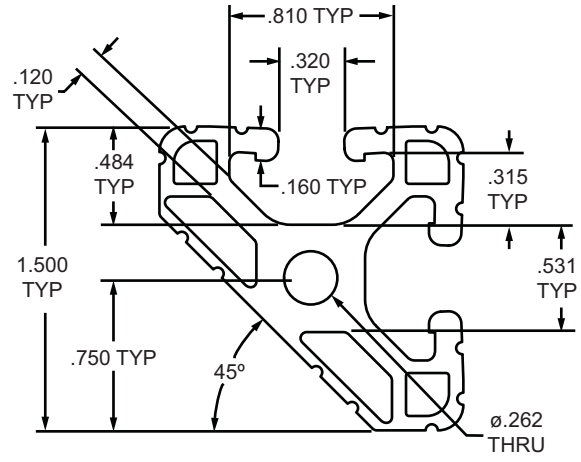

Part No.	Series	Stock Length	Material	Alloy**	Finish	Drop Lock	Moment of Inertia	Surface Area	Yield Strength	Modulus of Elasticity	Weight
1547 *	15	145”, 242”	Aluminum	6105-T5	Clear Anodize	2°	IX = 0.1365”⁴ IY = 0.1365”⁴	0.740 in.²	35,000 psi	10,200,000 lb / in.²	0.0723 lb / in.
1547-Black-FB		per inch			Black Anodize						

* The above profiles are sold per inch or stock length.

** Or comparable

Standard Machining Services

Service No.	Series	Service Description	Reference Page
7010	15	Cut to Length	859
7050	15	Access Hole	863
7040	15	Anchor Counterbore	865
7060	15	Tap Profile End	861

1.50” X 1.50” Lite Smooth Surface Quarter Round T-Slotted Profile - Two Open T-Slots

1517-LS Profile

1517-LS is a 1.50” x 1.50” lite fractional 15 series quarter round T-slot profile with a 1.125” radius curved back and two open T-slots, one on each of the 1.50” profile faces. The profile is smooth, which makes it resistant to dirt and debris buildup while also being easy to clean. The 1517-LS profile is compatible with 15 series fasteners. This profile lends itself to large workstations and displays because it provides an aesthetic appearance and panels or other support structures can be easily placed in the T-slots.

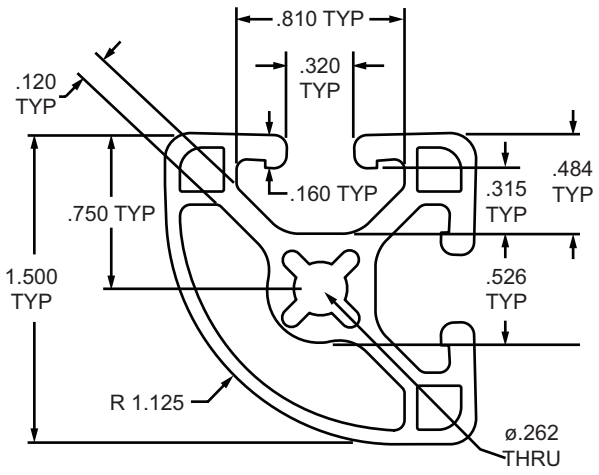

Part No.	Series	Stock Length	Material	Alloy**	Finish	Drop Lock	Moment of Inertia	Surface Area	Yield Strength	Modulus of Elasticity	Weight
1517-LS *	15	145”	Aluminum	6105-T5	Clear Anodize	2°	IX = 0.1686”⁴ IY = 0.1686”⁴	0.748 in.²	35,000 psi	10,200,000 lb / in.²	0.0729 lb / in.
1517-LS-Black-FB		per inch			Black Anodize						

* The above profiles are sold per inch or stock length.
** Or comparable

Standard Machining Services

Service No.	Series	Service Description	Reference Page
7010	15	Cut to Length	859
7050	15	Access Hole	863
7040	15	Anchor Counterbore	865
7060	15	Tap Profile End	861

1.50” X 1.50” Quarter Round T-Slotted Profile - Two Open T-Slots

1517 Profile

1517 is a 1.50” x 1.50” fractional 15 series quarter round T-slot profile with a 1.125” radius curved back and two open T-slots, one on each of the 1.50” profile faces. The profile has align-a-grooves to assist in alignment when connecting profiles. The 1517 profile is compatible with 15 series fasteners. This profile lends itself to large workstations and displays because it provides an aesthetic appearance and panels or other support structures can be easily placed in the T-slots.

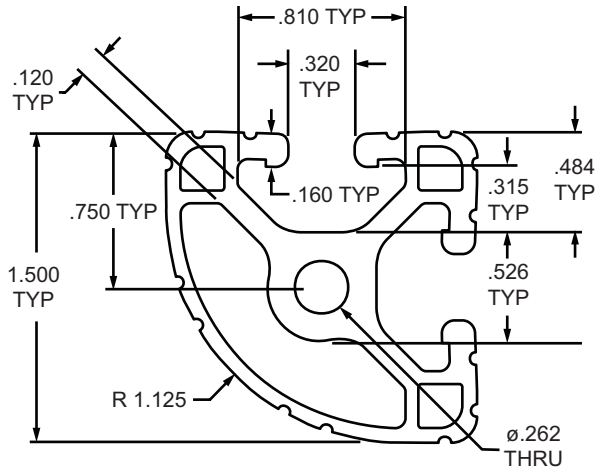

Part No.	Series	Stock Length	Material	Alloy**	Finish	Drop Lock	Moment of Inertia	Surface Area	Yield Strength	Modulus of Elasticity	Weight
1517 *	15	97”, 145”, 242”	Aluminum	6105-T5	Clear Anodize	2°	IX = 0.1662”⁴ IY = 0.1662”⁴	0.765 in.²	35,000 psi	10,200,000 lb / in.²	0.0746 lb / in.
1517-Black-FB		per inch			Black Anodize						

* The above profiles are sold per inch or stock length.
** Or comparable

Standard Machining Services

Service No.	Series	Service Description	Reference Page
7010	15	Cut to Length	859
7050	15	Access Hole	863
7040	15	Anchor Counterbore	865
7060	15	Tap Profile End	861

1.50” X .75” Smooth Surface T-Slotted Profile - Single Open T-Slot

1575 Profile

1575 is a 1.50” x 0.75” fractional 15 series rectangular T-slot profile with one open T-slot on one 1.50” face. The profile is smooth, which makes it resistant to dirt and debris buildup while also being easy to clean. The 1575 profile is compatible with 15 series fasteners. It is a thinner profile that connects easily to flat surfaces and works well as a supporting structure or spacer for mounting accessories such as handles, door tracks, rails, valves or sensors.

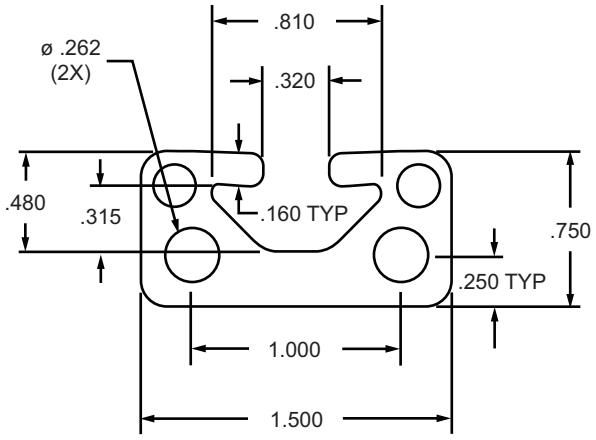

Part No.	Series	Stock Length	Material	Alloy**	Finish	Drop Lock	Moment of Inertia	Surface Area	Yield Strength	Modulus of Elasticity	Weight
1575 *	15	145”, 242”	Aluminum	6105-T5	Clear Anodize	2°	IX = 0.0380”⁴ IY = 0.1470”⁴	0.686 in.²	35,000 psi	10,200,000 lb / in.²	0.0669 lb / in.
1575-Black-FB		per inch			Black Anodize						

* The above profiles are sold per inch or stock length.

** Or comparable

Standard Machining Services

Service No.	Series	Service Description	Reference Page
7010	15	Cut to Length	859
7050	15	Access Hole	863
7040	15	Anchor Counterbore	865
7014	15	Tap Profile End	861
7257	15	Drill Thru & Counterbore	866

1.50” X .75” Lite T-Slotted Profile - Single Open T-Slot

1534-Lite Profile

1534-Lite is a 1.50” x 0.75” lite fractional 15 series rectangular T-slot profile with one open T-slot on one 1.50” face. The profile has align-a-grooves to assist in alignment when connecting profiles. The 1534-Lite profile is compatible with 15 series fasteners. It is a thinner profile that connects easily to flat surfaces and works well as a supporting structure or spacer for mounting accessories such as handles, door tracks, rails, valves or sensors.

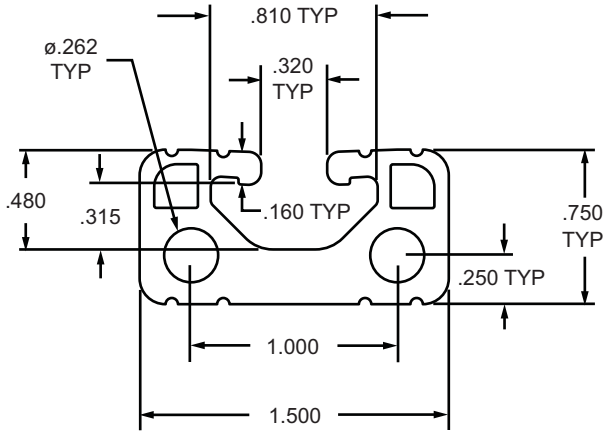

Part No.	Series	Stock Length	Material	Alloy**	Finish	Drop Lock	Moment of Inertia	Surface Area	Yield Strength	Modulus of Elasticity	Weight
1534-Lite *	15	145”	Aluminum	6105-T5	Clear Anodize	2°	IX = 0.0356in4 IY = 0.1360in4	0.634 in.2	35,000 psi	10,200,000 lb / in.2	0.0618 lb / in.
1534-Lite-Black-FB		per inch			Black Anodize						

* The above profiles are sold per inch or stock length.

** Or comparable

Standard Machining Services

Service No.	Series	Service Description	Reference Page
7010	15	Cut to Length	859
7050	15	Access Hole	863
7040	15	Anchor Counterbore	865
7014	15	Tap Profile End	861
7257	15	Drill Thru & Counterbore	866

3.00” X .75” Smooth Surface T-Slotted Profile - Two Adjacent Open T-Slots

3075 Profile

3075 is a 3.00” x 0.75” fractional 15 series rectangular T-slot profile with two adjacent open T-slots, two on one 3.00” face. The profile is smooth, which makes it resistant to dirt and debris buildup while also being easy to clean. The 3075 profile is compatible with 15 series fasteners. It is a thinner profile that connects easily to flat surfaces and works well as a supporting structure or spacer for mounting accessories such as handles, door tracks, rails, valves or sensors.

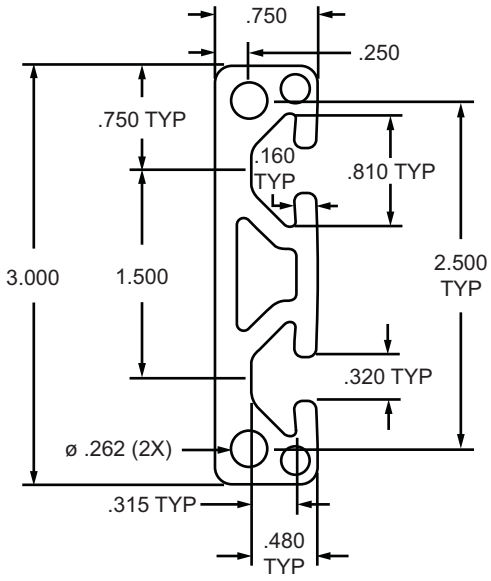

Part No.	Series	Stock Length	Material	Alloy**	Finish	Drop Lock	Moment of Inertia	Surface Area	Yield Strength	Modulus of Elasticity	Weight
3075 *	15	145”	Aluminum	6105-T5	Clear Anodize	2°	IX = 1.0672in4 IY = 0.0789in4	1.320 in.2	35,000 psi	10,200,000 lb / in.2	0.1287 lb / in.
3075-Black-FB		per inch			Black Anodize						

* The above profiles are sold per inch or stock length.
** Or comparable

Standard Machining Services

Service No.	Series	Service Description	Reference Page
7020	15	Cut to Length	859
7050	15	Access Hole	863
7040	15	Anchor Counterbore	865
7016	15	Tap Profile End	861
7257	15	Drill Thru & Counterbore	866

3.00” X .75” Lite T-Slotted Profile - Two Adjacent Open T-Slots

3034-Lite Profile

3034-Lite is a 3.00” x 0.75” lite fractional 15 series rectangular T-slot profile with two adjacent open T-slots, two on one 3.00” face. The profile has align-a-grooves to assist in alignment when connecting profiles. The 3034-Lite profile is compatible with 15 series fasteners. It is a thinner profile that connects easily to flat surfaces and works well as a supporting structure or spacer for mounting accessories such as handles, door tracks, rails, valves or sensors.

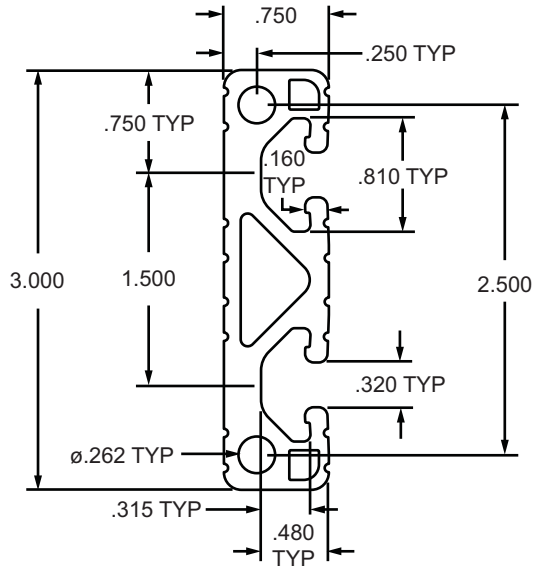

Part No.	Series	Stock Length	Material	Alloy**	Finish	Drop Lock	Moment of Inertia	Surface Area	Yield Strength	Modulus of Elasticity	Weight
3034-Lite *	15	145”	Aluminum	6105-T5	Clear Anodize	2°	IX = 0.9829in4 IY = 0.0725in4	1.186 in.2	35,000 psi	10,200,000 lb / in.2	0.1157 lb / in.
3034-Lite-Black-FB		per inch			Black Anodize						

* The above profiles are sold per inch or stock length.
** Or comparable

Standard Machining Services

Service No.	Series	Service Description	Reference Page
7020	15	Cut to Length	859
7050	15	Access Hole	863
7040	15	Anchor Counterbore	865
7016	15	Tap Profile End	861
7257	15	Drill Thru & Counterbore	866

1.50" X 3.00" Ultra Lite Smooth Surface T-Slotted Profile - Six Open T-Slots

1530-ULS Profile

1530-ULS is a 1.50" x 3.00" ultra-lite fractional 15 series rectangular T-slot profile with six open T-slots, two on each 3.00" face and one on each 1.50" face. The profile is smooth, which makes it resistant to dirt and debris buildup while also being easy to clean. The 1530-ULS profile is compatible with 15 series fasteners. The center cavity of the profile can be pressurized up to 150 psi, lending itself to work spaces, machine guards, displays and panel mount racks.

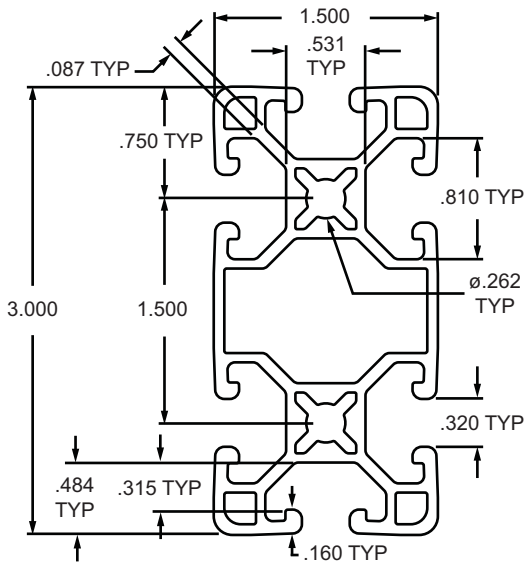

Part No.	Series	Stock Length	Material	Alloy**	Finish	Drop Lock	Moment of Inertia	Surface Area	Yield Strength	Modulus of Elasticity	Weight
1530-ULS *	15	145", 242"	Aluminum	6105-T5	Clear Anodize	2°	IX = 1.2855in⁴ IY = 0.3317in⁴	1.388 in.²	35,000 psi	10,200,000 lb / in.²	0.1350 lb / in.
1530-ULS-Black-FB		per inch			Black Anodize						

* The above profiles are sold per inch or stock length.
** Or comparable

Standard Machining Services

Service No.	Series	Service Description	Reference Page
7020	15	Cut to Length	859
7050	15	Access Hole	863
7040	15	Anchor Counterbore	865
7045	15	Tap Profile End	861

1.50” X 3.00” Ultra-Lite T-Slotted Profile - Six Open T-Slots

1530-UL Profile

1530-UL is a 1.50” x 3.00” ultra-lite fractional 15 series rectangular T-slot profile with six open T-slots, two on each 3.00” face and one on each 1.50” face. The profile has align-a-grooves to assist in alignment when connecting profiles. The 1530-UL profile is compatible with 15 series fasteners. The center cavity of the profile can be pressurized up to 150 psi, lending itself to work spaces, machine guards, displays and panel mount racks.

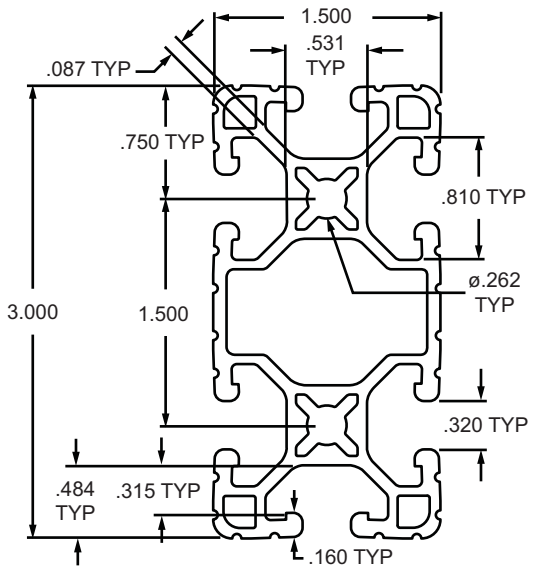

Part No.	Series	Stock Length	Material	Alloy**	Finish	Drop Lock	Moment of Inertia	Surface Area	Yield Strength	Modulus of Elasticity	Weight
1530-UL *	15	145”, 242”	Aluminum	6105-T5	Clear Anodize	2°	IX = 1.2481”⁴ IY = 0.3177”⁴	1.354 in.²	35,000 psi	10,200,000 lb / in.²	0.1320 lb / in.
1530-UL-Black-FB		per inch			Black Anodize						

* The above profiles are sold per inch or stock length.

** Or comparable

Standard Machining Services

Service No.	Series	Service Description	Reference Page
7020	15	Cut to Length	859
7050	15	Access Hole	863
7040	15	Anchor Counterbore	865
7045	15	Tap Profile End	861

1530-LS Profile

1530-LS is a 1.50” x 3.00” lite fractional 15 series rectangular T-slot profile with six open T-slots, two on each 3.00” face and one on each 1.50” face. The profile is smooth, which makes it resistant to dirt and debris buildup while also being easy to clean. The 1530-LS profile is compatible with 15 series fasteners. The center cavity of the profile can be pressurized up to 150 psi, lending itself to work spaces, machine guards, displays and panel mount racks.

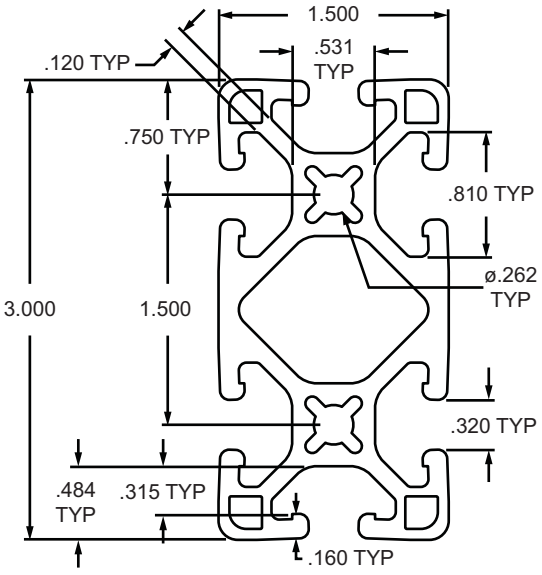

Part No.	Series	Stock Length	Material	Alloy**	Finish	Drop Lock	Moment of Inertia	Surface Area	Yield Strength	Modulus of Elasticity	Weight
1530-LS *	15	145”, 242”	Aluminum	6105-T5	Clear Anodize	2°	IX = 1.3881in4 IY = 0.4061in4	1.682 in.2	35,000 psi	10,200,000 lb / in.2	0.1640 lb / in.
1530-LS-Black *		145”			Black Anodize						
1530-LS-Black-FB		per inch			Black Anodize						

* The above profiles are sold per inch or stock length.

** Or comparable

Standard Machining Services

Service No.	Series	Service Description	Reference Page
7020	15	Cut to Length	859
7050	15	Access Hole	863
7040	15	Anchor Counterbore	865
7045	15	Tap Profile End	861

1.50” X 3.00” Lite T-Slotted Profile - Six Open T-Slots

1530-Lite Profile

1530-Lite is a 1.50” x 3.00” lite fractional 15 series rectangular T-slot profile with six open T-slots, two on each 3.00” face and one on each 1.50” face. The profile has align-a-grooves to assist in alignment when connecting profiles. The 1530-Lite profile is compatible with 15 series fasteners. The center cavity of the profile can be pressurized up to 150 psi, lending itself to work spaces, machine guards, displays and panel mount racks.

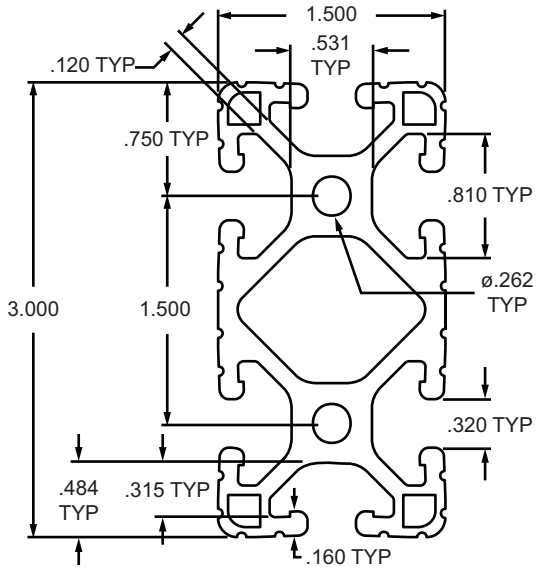

Part No.	Series	Stock Length	Material	Alloy**	Finish	Drop Lock	Moment of Inertia	Surface Area	Yield Strength	Modulus of Elasticity	Weight
1530-Lite *	15	97”, 145”, 242”	Aluminum	6105-T5	Clear Anodize	2°	IX = 1.3847”^4 IY = 0.3935”^4	1.722 in.^2	35,000 psi	10,200,000 lb / in.^2	0.1679 lb / in.
1530-Lite-Black *		145”			Black Anodize						
1530-Lite-Black-FB		per inch			Black Anodize						
1530-Lite-Yellow *		145”			Yellow Powder Coat						

* The above profiles are sold per inch or stock length.

** Or comparable

Standard Machining Services

Service No.	Series	Service Description	Reference Page
7020	15	Cut to Length	859
7050	15	Access Hole	863
7040	15	Anchor Counterbore	865
7045	15	Tap Profile End	861

1530-S Profile

1530-S is a 1.50” x 3.00” fractional 15 series rectangular T-slot profile with six open T-slots, two on each 3.00” face and one on each 1.50” face. The profile is smooth, which makes it resistant to dirt and debris buildup while also being easy to clean. The 1530-S profile is compatible with 15 series fasteners. The center cavity of the profile can be pressurized up to 150 psi, lending itself to work spaces, machine guards or displays.

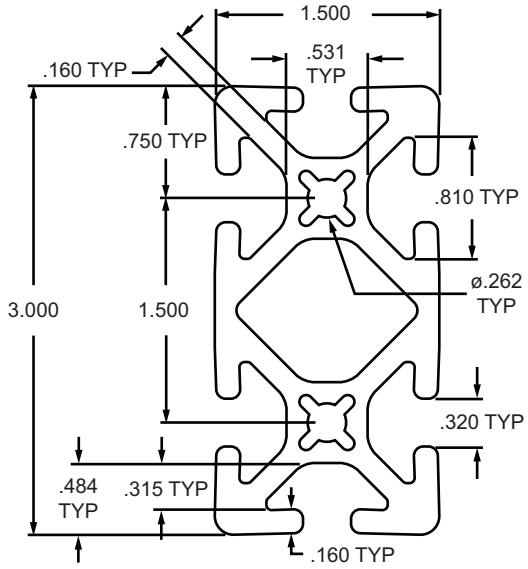

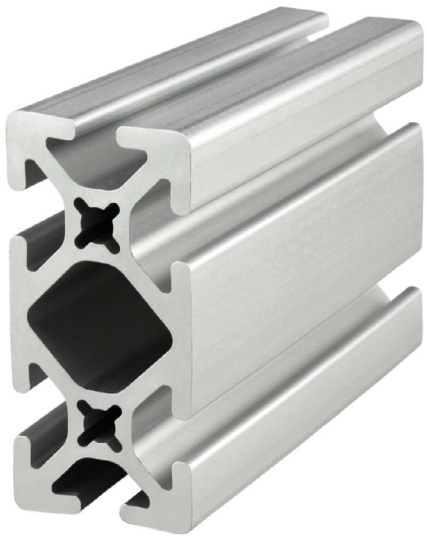

Part No.	Series	Stock Length	Material	Alloy**	Finish	Drop Lock	Moment of Inertia	Surface Area	Yield Strength	Modulus of Elasticity	Weight
1530-S *	15	145”, 242”	Aluminum	6105-T5	Clear Anodize	2°	IX = 1.8127in4 IY = 0.4957in4	2.036 in.2	35,000 psi	10,200,000 lb / in.2	0.1985 lb / in.
1530-S-Black *		145”			Black Anodize						
1530-S-Black-FB		per inch			Black Anodize						

* The above profiles are sold per inch or stock length.

** Or comparable

Standard Machining Services

Service No.	Series	Service Description	Reference Page
7020	15	Cut to Length	859
7050	15	Access Hole	863
7040	15	Anchor Counterbore	865
7045	15	Tap Profile End	861

1.50” X 3.00” T-Slotted Profile - Six Open T-Slots

1530 Profile

1530 is a 1.50” x 3.00” fractional 15 series rectangular T-slot profile with six open T-slots, two on each 3.00” face and one on each 1.50” face. The profile has align-a-grooves to assist in alignment when connecting profiles. The 1530 profile is compatible with 15 series fasteners. The center cavity of the profile can be pressurized up to 150 psi, lending itself to work spaces, machine guards, displays and panel mount racks.

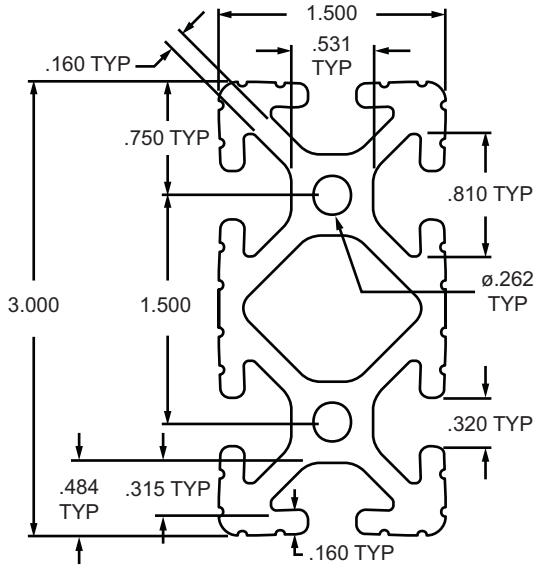

Part No.	Series	Stock Length	Material	Alloy**	Finish	Drop Lock	Moment of Inertia	Surface Area	Yield Strength	Modulus of Elasticity	Weight
1530 *	15	97”, 145”, 242”	Aluminum	6105-T5	Clear Anodize	2°	IX = 1.8042in4 IY = 0.4824in4	2.077 in.2	35,000 psi	10,200,000 lb / in.2	0.2025 lb / in.
1530-Black *		145”			Black Anodize						
1530-Black-FB		per inch			Black Anodize						

* The above profiles are sold per inch or stock length.

** Or comparable

Standard Machining Services

Service No.	Series	Service Description	Reference Page
7020	15	Cut to Length	859
7050	15	Access Hole	863
7040	15	Anchor Counterbore	865
7045	15	Tap Profile End	861

1545-LS Profile

1545-LS is a 1.50” x 4.50” fractional 15 series rectangular T-slot profile with eight open T-slots, one on each 1.50” face and three on each 4.50” face. The 1545-LS profile is the light-duty version in the 1545 profile family. It is smooth, which makes it resistant to dirt and debris buildup while also being easy to clean. The 1545-LS profile is compatible with all 15 series fasteners, and lends itself to clean room applications, guards, enclosures, or workstations. The eight open T-slots enable access from any direction and are useful for mounting accessories.

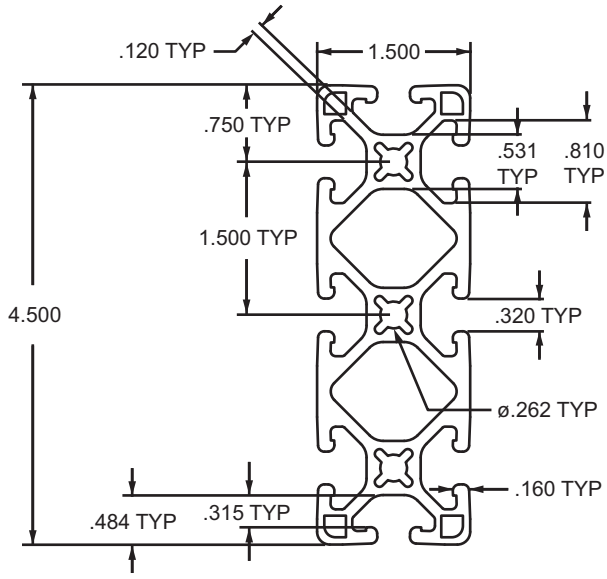

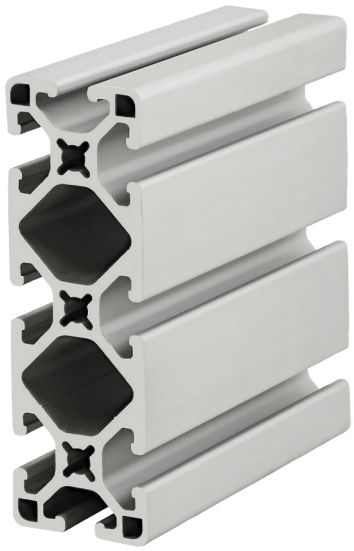

Part No.	Series	Stock Length	Material	Alloy**	Finish	Drop Lock	Moment of Inertia	Surface Area	Yield Strength	Modulus of Elasticity	Weight
1545-LS *	15	145”, 242”	Aluminum	6105-T5	Clear Anodize	2°	IX = 4.4732in4 IY = 0.6251in4	2.492 in.2	35,000 psi	10,200,000 lb / in.2	0.242 lb / in.
1545-LS-Black-FB	15	per inch	Aluminum	6105-T5	Black Anodize	2°	IX = 4.4732in4 IY = 0.6251in4	2.492 in.2	35,000 psi	10,200,000 lb / in.2	0.242 lb / in.

* The above profiles are sold per inch or stock length.

** Or comparable

Standard Machining Services

Service No.	Series	Service Description	Reference Page
7021	15	Cut to Length	859
7050	15	Access Hole	863
7040	15	Anchor Counterbore	865
7026	15	Tap Profile End	861

1.50” X 4.50” Smooth Surface T-Slotted Profile - Eight Open T-Slots

1545-S Profile

1545-S is a 1.50” x 4.50” fractional 15 series rectangular T-slot profile with eight open T-slots, three on each 4.50” face and one on each 1.50” face. The profile is smooth, which makes it resistant to dirt and debris buildup while also being easy to clean. The 1545-S profile is compatible with 15 series fasteners and has center cavities that can be pressurized up to 150 psi. The eight open T-slots make this profile great for mounting accessories, flat plates and hinges while the ability to pressurize it lends it to machine frames or robotics.

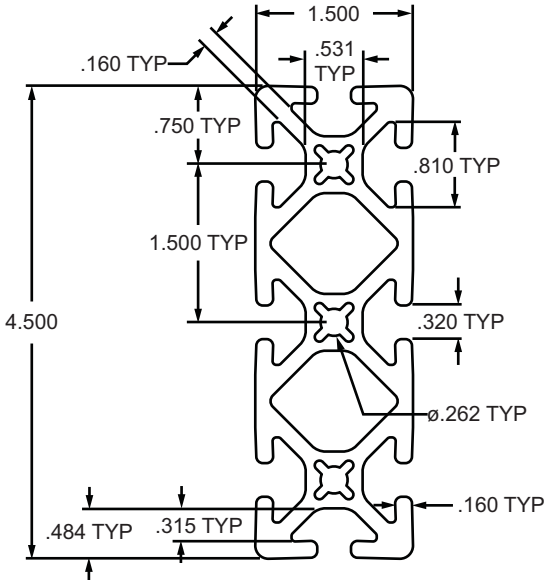

Part No.	Series	Stock Length	Material	Alloy**	Finish	Drop Lock	Moment of Inertia	Surface Area	Yield Strength	Modulus of Elasticity	Weight
1545-S *	15	145”, 242”	Aluminum	6105-T5	Clear Anodize	2°	IX = 5.6675”^4 IY = 0.7282”^4	2.935 in.^2	35,000 psi	10,200,000 lb / in.^2	0.2862 lb / in.
1545-S-Black-FB		per inch			Black Anodize						

* The above profiles are sold per inch or stock length.
** Or comparable

Standard Machining Services

Service No.	Series	Service Description	Reference Page
7021	15	Cut to Length	859
7050	15	Access Hole	863
7040	15	Anchor Counterbore	865
7026	15	Tap Profile End	861

1545 Profile

1545 is a 1.50” x 4.50” fractional 15 series rectangular T-slot profile with eight open T-slots, three on each 4.50” face and one on each 1.50” face. The profile has align-a-grooves to assist in alignment when connecting profiles. The 1545 profile is compatible with 15 series fasteners and has center cavities that can be pressurized up to 150 psi The eight open T-slots make this profile great for mounting accessories, flat plates and hinges while the pressurized cavities lend it to machine frames or robotics.

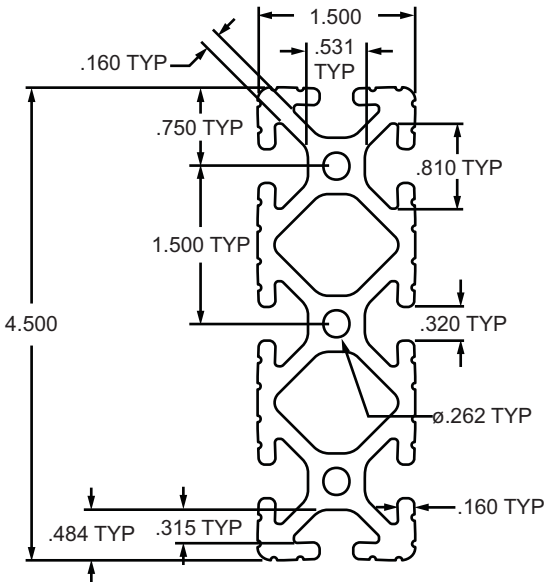

Part No.	Series	Stock Length	Material	Alloy**	Finish	Drop Lock	Moment of Inertia	Surface Area	Yield Strength	Modulus of Elasticity	Weight
1545 *	15	145”, 242”	Aluminum	6105-T5	Clear Anodize	2°	IX = 5.6929in4 IY = 0.7097in4	3.002 in.2	35,000 psi	10,200,000 lb / in.2	0.2927 lb / in.
1545-Black-FB		per inch			Black Anodize						

* The above profiles are sold per inch or stock length.

** Or comparable

Standard Machining Services

Service No.	Series	Service Description	Reference Page
7021	15	Cut to Length	859
7050	15	Access Hole	863
7040	15	Anchor Counterbore	865
7026	15	Tap Profile End	861

3.00” X 3.00” Lite Smooth T-Slotted Profile - Eight Open T-Slots

3030-LS Profile

3030-LS is a 3.00” x 3.00” lite fractional 15 series square T-slot profile with eight open T-slots, two on each 3.00” face. The profile is smooth, which makes it resistant to dirt and debris buildup while also being easy to clean. The 3030-LS profile is the light-duty version in the 3030 profile family, is compatible with 15 series fasteners, and has a center cavity that can be pressurized up to 150 psi. The eight open T-slots, strength, and ability to pressurize this profile make it a great choice for automation applications, machine frames and workstations.

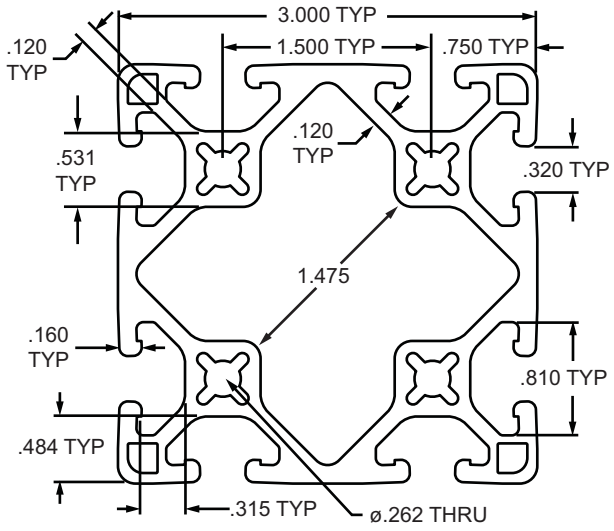

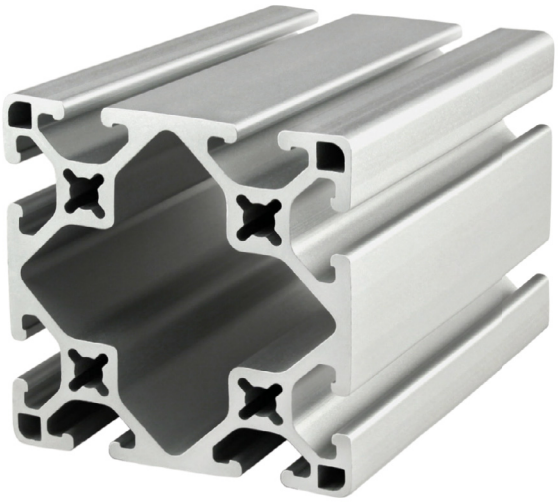

Part No.	Series	Stock Length	Material	Alloy**	Finish	Drop Lock	Moment of Inertia	Surface Area	Yield Strength	Modulus of Elasticity	Weight
3030-LS *	15	145”, 242”	Aluminum	6105-T5	Clear Anodize	2°	IX = 2.6861"4 IY = 2.6861"4	2.659 in.2	35,000 psi	10,200,000 lb / in.2	0.2593 lb / in.
3030-LS-Black-FB		per inch			Black Anodize						

* The above profiles are sold per inch or stock length.

** Or comparable

Standard Machining Services

Service No.	Series	Service Description	Reference Page
7030	15	Cut to Length	859
7050	15	Access Hole	863
7040	15	Anchor Counterbore	865
7055	15	Tap Profile End	861

3030-Lite Profile

3030-Lite is a 3.00” x 3.00” lite fractional 15 series square T-slot profile with eight open T-slots, two on each 3.00” face. The profile has align-a-grooves to assist in alignment when connecting profiles. The 3030-Lite profile is the light-duty version in the 3030 profile family, is compatible with 15 series fasteners, and has a center cavity that can be pressurized up to 150 psi. The eight open T-slots, strength, and ability to pressurize this profile make it a great choice for automation applications, machine frames and workstations.

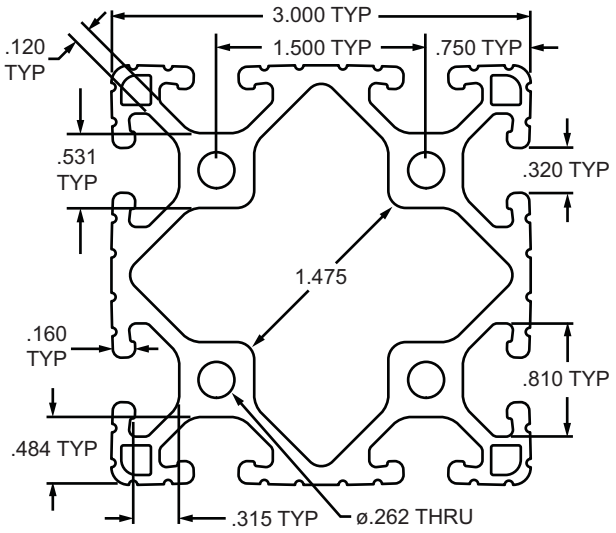

Part No.	Series	Stock Length	Material	Alloy**	Finish	Drop Lock	Moment of Inertia	Surface Area	Yield Strength	Modulus of Elasticity	Weight
3030-Lite *	15	145”, 242”	Aluminum	6105-T5	Clear Anodize	2°	IX = 2.6959$^{\text{in}4}$ IY = 2.6959$^{\text{in}4}$	2.763 in.^{2}	35,000 psi	10,200,000 lb / in.^{2}	0.2695 lb / in.
3030-Lite-Black-FB		per inch			Black Anodize						

* The above profiles are sold per inch or stock length.
** Or comparable

Standard Machining Services

Service No.	Series	Service Description	Reference Page
7030	15	Cut to Length	859
7050	15	Access Hole	863
7040	15	Anchor Counterbore	865
7055	15	Tap Profile End	861

3.00” X 3.00” Smooth Surface T-Slotted Profile - Eight Open T-Slots

3030-S Profile

3030-S is a 3.00” x 3.00” fractional 15 series square T-slot profile with eight open T-slots, two on each 3.00” face. The profile is smooth, which makes it resistant to dirt and debris buildup. The 3030-S profile is compatible with 15 series fasteners and has a center cavity that can be pressurized up to 150 psi. The eight open T-slots, strength, and ability to pressurize this profile make it a great choice for automation applications, machine frames and workstations.

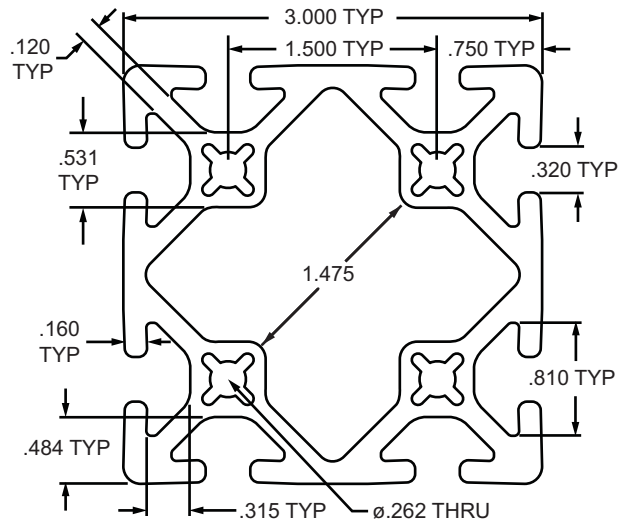

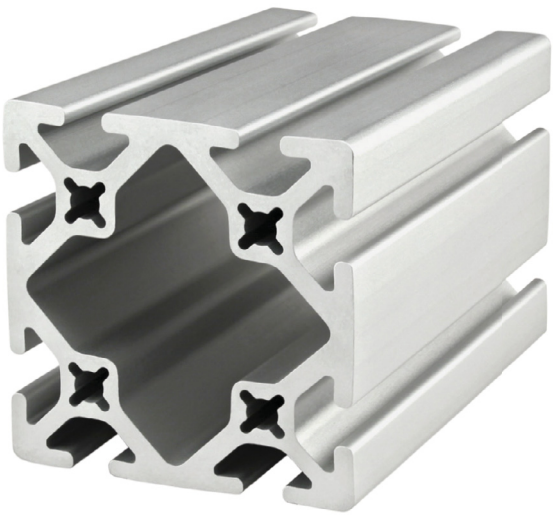

Part No.	Series	Stock Length	Material	Alloy**	Finish	Drop Lock	Moment of Inertia	Surface Area	Yield Strength	Modulus of Elasticity	Weight
3030-S *	15	145”, 242”	Aluminum	6105-T5	Clear Anodize	2°	IX = 3.3496in4 IY = 3.3496in4	3.109 in.2	35,000 psi	10,200,000 lb / in.2	0.3032 lb / in.
3030-S-Black *		145”			Black Anodize						
3030-S-Black-FB		per inch			Black Anodize						

* The above profiles are sold per inch or stock length.

** Or comparable

Standard Machining Services

Service No.	Series	Service Description	Reference Page
7030	15	Cut to Length	859
7050	15	Access Hole	863
7040	15	Anchor Counterbore	865
7055	15	Tap Profile End	861

3030 Profile

3030 is a 3.00” x 3.00” fractional 15 series square T-slot profile with eight open T-slots, two on each 3.00” face. The profile has align-a-grooves to assist in alignment when connecting profiles. The 3030 profile is compatible with 15 series fasteners and has a center cavity that can be pressurized up to 150 psi. The eight open T-slots, strength, and ability to pressurize this profile make it a great choice for automation applications, machine frames and workstations.

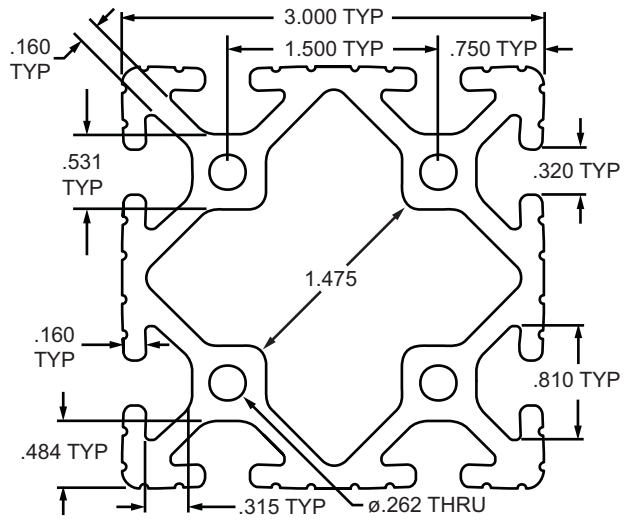

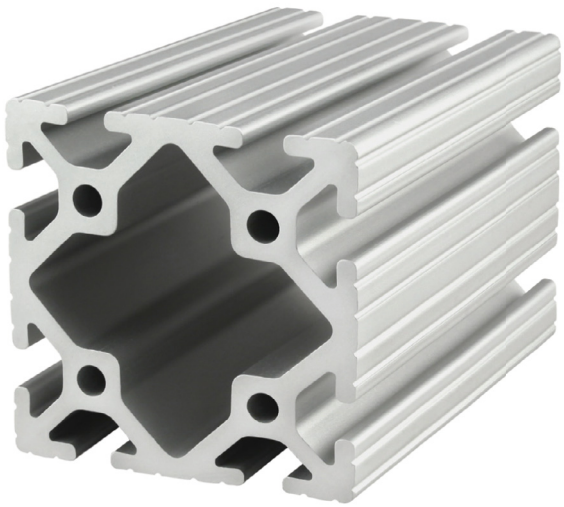

Part No.	Series	Stock Length	Material	Alloy**	Finish	Drop Lock	Moment of Inertia	Surface Area	Yield Strength	Modulus of Elasticity	Weight
3030 *	15	145”, 242”	Aluminum	6105-T5	Clear Anodize	2°	IX = 3.4133”⁴ IY = 3.4133”⁴	3.212 in.²	35,000 psi	10,200,000 lb / in.²	0.3132 lb / in.
3030-Black *		145”			Black Anodize						
3030-Black-FB		per inch			Black Anodize						

* The above profiles are sold per inch or stock length.

** Or comparable

Standard Machining Services

Service No.	Series	Service Description	Reference Page
7030	15	Cut to Length	859
7050	15	Access Hole	863
7040	15	Anchor Counterbore	865
7055	15	Tap Profile End	861

3060 Profile

3060 is a 3.00” x 6.00” fractional 15 series rectangular T-slot profile with twelve open T-slots, two on each 3.00” face and four on each 6.00” face. The profile has align-a-grooves to assist in alignment when connecting profiles. The 3060 profile is the largest fractional profile offered by 80/20, is compatible with 15 series fasteners, and has center cavities that can be pressurized up to 150 psi. The twelve open T-slots, strength, and ability to pressurize this profile make it a great choice for automation, machine framing and workstations.

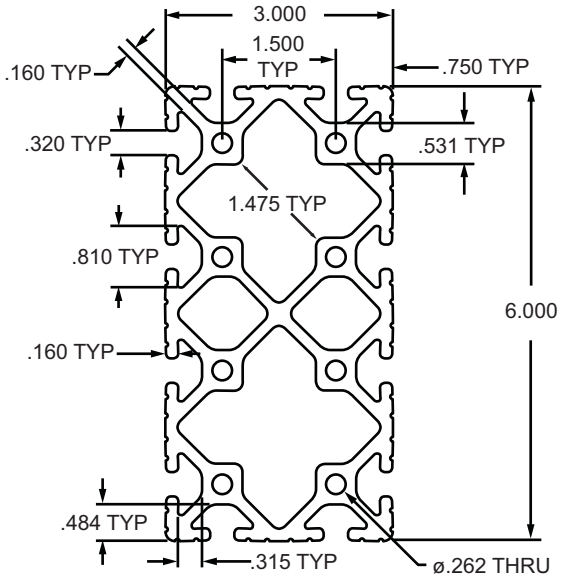

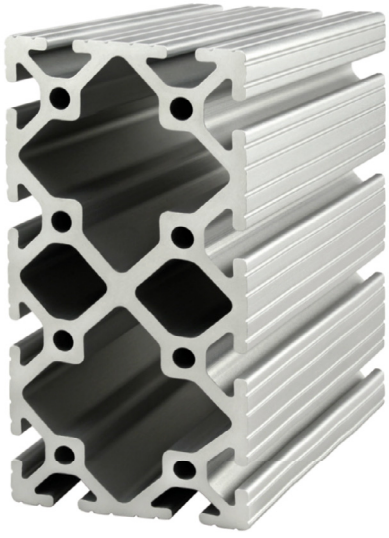

Part No.	Series	Stock Length	Material	Alloy**	Finish	Drop Lock	Moment of Inertia	Surface Area	Yield Strength	Modulus of Elasticity	Weight
3060 *	15	145”, 242”	Aluminum	6105-T5	Clear Anodize	2°	IX = 22.0300in^4 IY = 6.5164in^4	5.963 in.^{2}	35,000 psi	10,200,000 lb / in.^{2}	0.5815 lb / in.
3060-Black-FB		per inch			Black Anodize						

* The above profiles are sold per inch or stock length.
** Or comparable

Standard Machining Services

Service No.	Series	Service Description	Reference Page
7023	15	Cut to Length	859
7050	15	Access Hole	863
7040	15	Anchor Counterbore	865
7029	15	Tap Profile End	861

20-2020 Profile

20-2020 is a 20mm x 20mm metric 20 series square T-slot profile with four open T-slots, one on each 20mm face. The profile is smooth, which makes it resistant to dirt and debris buildup while also being easy to clean. The 20-2020 profile is compatible with all 20 series fasteners. The 20-2020 profile is part of the smallest profile series 80/20 offers and lends itself to machine guards, work benches, panel mount racks or displays. The four open T-slots enable access from any direction and are useful for mounting accessories.

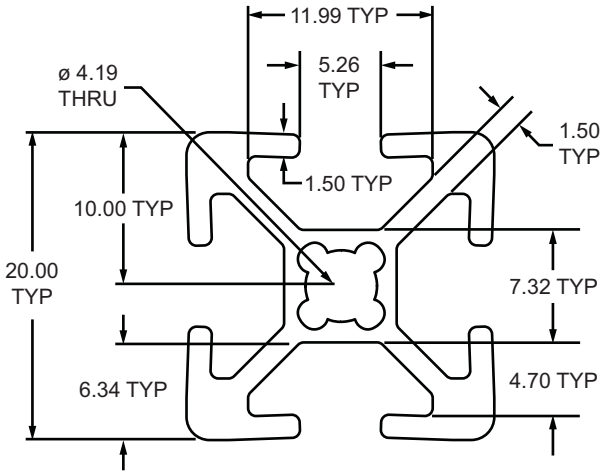

Part No.	Series	Stock Length	Material	Alloy**	Finish	Drop Lock	Moment of Inertia	Surface Area	Yield Strength	Modulus of Elasticity	Weight
20-2020 *	20	4 or 6 Meter	Aluminum	6105-T5	Clear Anodize	2°	IX = 0.6826 cm^4 IY = 0.6826 cm^4	1.591 cm^2	241.1 N / mm^2	70,326.5 N / mm^2	0.4420 kg / m
20-2020-Black-FB		per millimeter			Black Anodize						

* The above profiles are sold per millimeter or stock length.

** Or comparable

Standard Machining Services

Service No.	Series	Service Description	Reference Page
20-7005	20	Cut to Length	859
20-7069	20	Access Hole	863
20-7042	20	Anchor Counterbore	865
20-7063	20	Tap Profile End	861

20-2040 Profile

20-2040 is a 20mm x 40mm metric 20 series rectangular T-slot profile with six open T-slots, two on each 40mm face and one on each 20mm face. The profile is smooth, which makes it resistant to dirt and debris buildup while also being easy to clean. The 20-2040 profile is compatible with 20 series fasteners. It is a part of the smallest profile series 80/20 offers, lending itself to work spaces, machine guards, displays and panel mount racks.

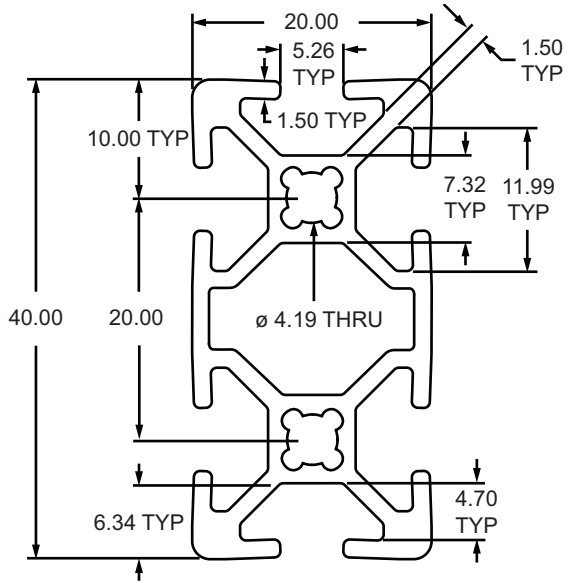

Part No.	Series	Stock Length	Material	Alloy**	Finish	Drop Lock	Moment of Inertia	Surface Area	Yield Strength	Modulus of Elasticity	Weight
20-2040 *	20	4 or 6 Meter	Aluminum	6105-T5	Clear Anodize	2°	IX = 4.5357 cm^4 IY = 1.2133 cm^4	2.750 cm^2	241.1 N / mm^2	70,326.5 N / mm^2	0.7426 kg / m
20-2040-Black-FB		per millimeter			Black Anodize						

* The above profiles are sold per millimeter or stock length.

** Or comparable

Standard Machining Services

Service No.	Series	Service Description	Reference Page
20-7020	20	Cut to Length	859
20-7069	20	Access Hole	863
20-7042	20	Anchor Counterbore	865
20-7047	20	Tap Profile End	862

20-4040 Profile

20-4040 is a 40mm x 40mm metric 20 series square T-slot profile with eight open T-slots, two on each 40mm face. The profile is smooth, which makes it resistant to dirt and debris buildup while also being easy to clean. The 20-4040 profile is compatible with 20 series fasteners. The eight open T-slots and strength make it a great choice for automation applications, machine frames and workstations.

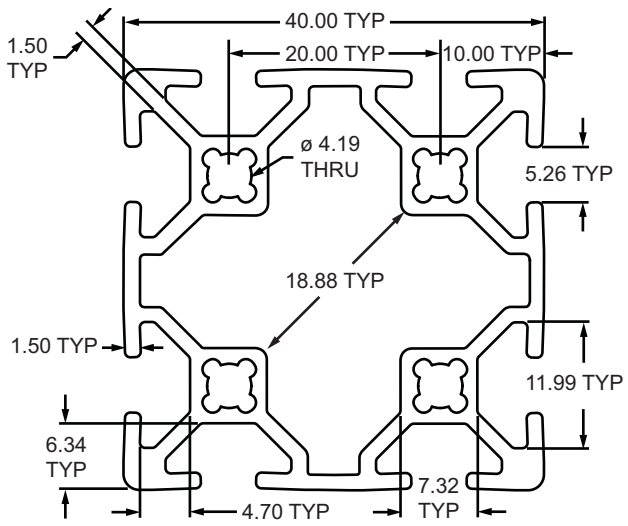

Part No.	Series	Stock Length	Material	Alloy**	Finish	Drop Lock	Moment of Inertia	Surface Area	Yield Strength	Modulus of Elasticity	Weight
20-4040 *	20	4 or 6 Meter	Aluminum	6105-T5	Clear Anodize	2°	IX = 7.8219 cm^4 IY = 7.8219 cm^4	4.227 cm^2	241.1 N / mm^2	70,326.5 N / mm^2	1.1721 kg / m
20-4040-Black-FB		per millimeter			Black Anodize						

* The above profiles are sold per millimeter or stock length.

** Or comparable

Standard Machining Services

Service No.	Series	Service Description	Reference Page
20-7030	20	Cut to Length	859
20-7069	20	Access Hole	863
20-7042	20	Anchor Counterbore	865
20-7067	20	Tap Profile End	862

25-2525 Profile

25-2525 is a 25mm x 25mm metric 25 series square T-slot profile with four open T-slots, one on each 25mm face. The profile is smooth, which makes it resistant to dirt and debris buildup while also being easy to clean. The 25-2525 profile is compatible with all 25 series fasteners. This profile lends itself to clean room applications, guards, enclosures, or workstations.

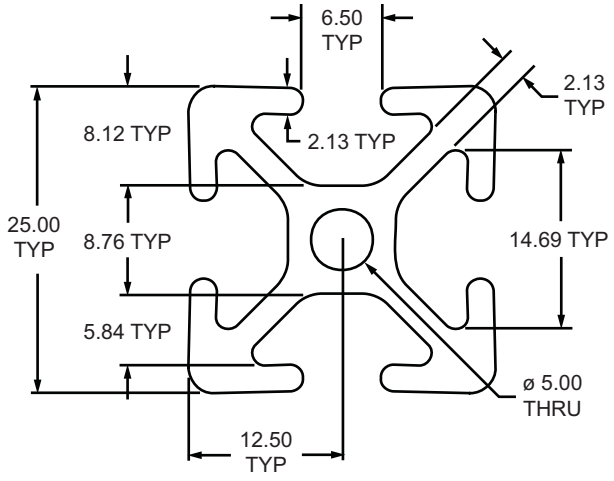

Part No.	Series	Stock Length	Material	Alloy**	Finish	Drop Lock	Moment of Inertia	Surface Area	Yield Strength	Modulus of Elasticity	Weight
25-2525 *	25	4 or 6 Meter	Aluminum	6105-T5	Clear Anodize	2°	IX = 1.7726 cm^4 IY = 1.7726 cm^4	2.746 cm^2	241.1 N / mm^2	70,326.5 N / mm^2	0.7426 kg / m
25-2525-Black *		4 Meter			Black Anodize						
25-2525-Black-FB		per millimeter			Black Anodize						

* The above profiles are sold per millimeter or stock length.
** Or comparable

Standard Machining Services

Service No.	Series	Service Description	Reference Page
25-7005	25	Cut to Length	859
25-7051	25	Access Hole	863
25-7042	25	Anchor Counterbore	865
25-7063	25	Tap Profile End	862

25-2501 Profile

25-2501 is a 25mm x 25mm metric 25 series square T-slot profile with one open T-slot on one 25mm face. The profile is smooth, which makes it resistant to dirt and debris buildup while also being easy to clean. The 25-2501 profile is compatible with 25 series fasteners. The three closed faces on this profile provide a clean, aesthetic look and it lends itself to furniture, displays, desks, trade show booths, or retail kiosks.

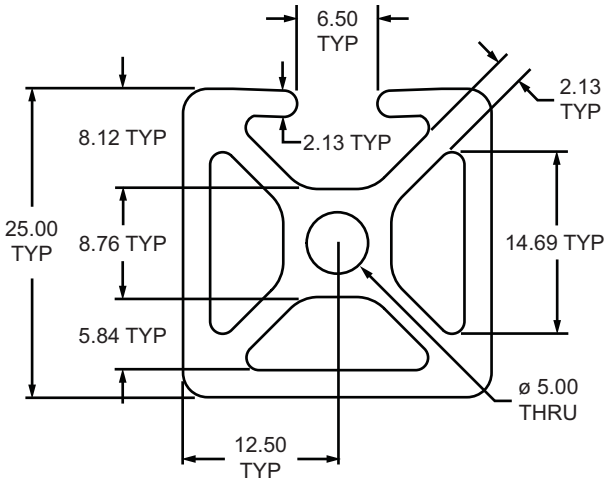

Part No.	Series	Stock Length	Material	Alloy**	Finish	Drop Lock	Moment of Inertia	Surface Area	Yield Strength	Modulus of Elasticity	Weight
25-2501 *	25	4 or 6 Meter	Aluminum	6105-T5	Clear Anodize	2°	IX = 2.1892 cm^4 IY = 1.9873 cm^4	3.185 cm^2	241.1 N / mm^2	70,326.5 N / mm^2	0.8607 kg / m
25-2501-Black-FB		per millimeter			Black Anodize						

* The above profiles are sold per millimeter or stock length.

** Or comparable

Standard Machining Services

Service No.	Series	Service Description	Reference Page
25-7005	25	Cut to Length	859
25-7051	25	Access Hole	863
25-7042	25	Anchor Counterbore	865
25-7063	25	Tap Profile End	862

25mm X 25mm T-Slotted Profile - Two Adjacent Open T-Slots

25-2502 Profile

25-2502 is a 25mm x 25mm metric 25 series square T-slot profile with two adjacent open T-slots, one on two 25mm faces. The profile is smooth, which makes it resistant to dirt and debris buildup while also being easy to clean. The 25-2502 profile is compatible with 25 series fasteners. The two closed faces on this profile provide a clean, aesthetic look while also having the capability to mount additional profiles, parts and accessories. It lends itself to furniture, displays, desks, trade show booths, or retail kiosks.

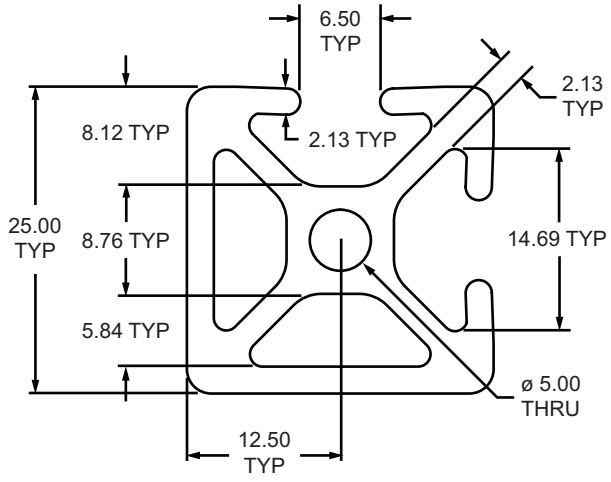

Part No.	Series	Stock Length	Material	Alloy**	Finish	Drop Lock	Moment of Inertia	Surface Area	Yield Strength	Modulus of Elasticity	Weight
25-2502 *	25	4 or 6 Meter	Aluminum	6105-T5	Clear Anodize	2°	IX = 1.9780 cm^4 IY = 1.9780 cm^4	3.039 cm^2	241.1 N / mm^2	70,326.5 N / mm^2	0.8214 kg / m
25-2502-Black-FB		per millimeter			Black Anodize						

* The above profiles are sold per millimeter or stock length.
** Or comparable

Standard Machining Services

Service No.	Series	Service Description	Reference Page
25-7005	25	Cut to Length	859
25-7051	25	Access Hole	863
25-7042	25	Anchor Counterbore	865
25-7063	25	Tap Profile End	862

25mm X 25mm T-Slotted Profile - Three Adjacent Open T-Slots

25-2503 Profile

25-2503 is a 25mm x 25mm metric 25 series square T-slot profile with three adjacent open T-slots, one on three 25mm faces. The profile is smooth, which makes it resistant to dirt and debris buildup while also being easy to clean. The 25-2503 profile is compatible with 25 series fasteners. The closed face on this profile provides a clean, aesthetic look while also having the capability to mount additional profiles, parts, and accessories.

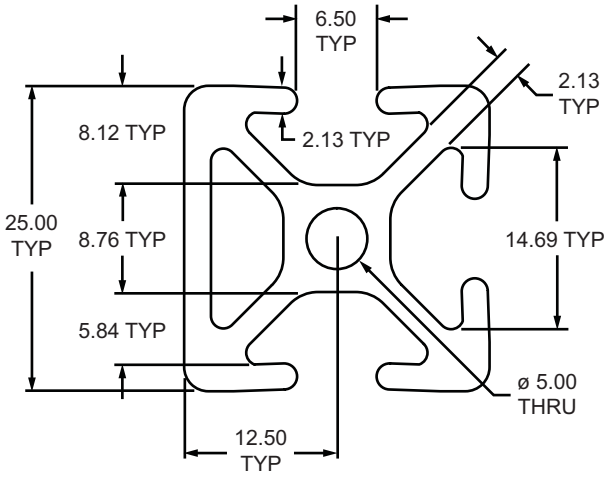

Part No.	Series	Stock Length	Material	Alloy**	Finish	Drop Lock	Moment of Inertia	Surface Area	Yield Strength	Modulus of Elasticity	Weight
25-2503 *	25	4 or 6 Meter	Aluminum	6105-T5	Clear Anodize	2°	IX = 1.9688 cm^4 IY = 1.7669 cm^4	2.892 cm^2	241.1 N / mm^2	70,326.5 N / mm^2	0.7820 kg / m
25-2503-Black-FB		per millimeter			Black Anodize						

* The above profiles are sold per millimeter or stock length.
** Or comparable

Standard Machining Services

Service No.	Series	Service Description	Reference Page
25-7005	25	Cut to Length	859
25-7051	25	Access Hole	863
25-7042	25	Anchor Counterbore	865
25-7063	25	Tap Profile End	862

25mm X 25mm T-Slotted Profile - Two Opposite Open T-Slots

25-2504 Profile

25-2504 is a 25mm x 25mm metric 25 series square T-slot profile with two opposite open T-slots, one on two 25mm faces. The profile is smooth, which makes it resistant to dirt and debris buildup while also being easy to clean. The 25-2504 profile is compatible with 25 series fasteners. The placement of the T-slots allow support structures or panels to be easily placed into them while maintaining a continuous surface, lending itself to projects such as guarding, furniture or displays.

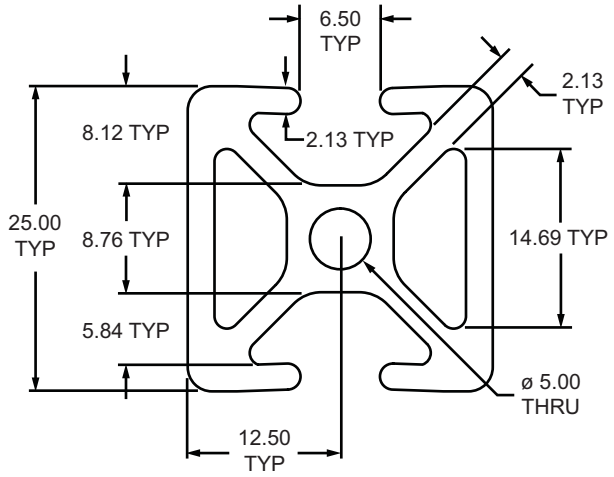

Part No.	Series	Stock Length	Material	Alloy**	Finish	Drop Lock	Moment of Inertia	Surface Area	Yield Strength	Modulus of Elasticity	Weight
25-2504 *	25	4 or 6 Meter	Aluminum	6105-T5	Clear Anodize	2°	IX = 2.2730 cm^4 IY = 1.7761 cm^4	3.039 cm^2	241.1 N / mm^2	70,326.5 N / mm^2	0.8214 kg / m
25-2504-Black-FB		per millimeter			Black Anodize						

* The above profiles are sold per millimeter or stock length.
** Or comparable

Standard Machining Services

Service No.	Series	Service Description	Reference Page
25-7005	25	Cut to Length	859
25-7051	25	Access Hole	863
25-7042	25	Anchor Counterbore	865
25-7063	25	Tap Profile End	862

25mm X 25mm Quarter Round T-Slotted Profile - Two Open T-Slots

25-2527 Profile

25-2527 is a 25mm x 25mm metric 25 series quarter round T-slot profile with an 18.75mm radius curved back and two open T-slots, one on each of the 25mm profile faces. The profile is smooth, which makes it resistant to dirt and debris buildup while also being easy to clean. The 25-2527 profile is compatible with 25 series fasteners. This profile lends itself to workstations and displays because panels or other support structures can be easily placed in the T-slots allowing a continuous surface and aesthetic appearance.

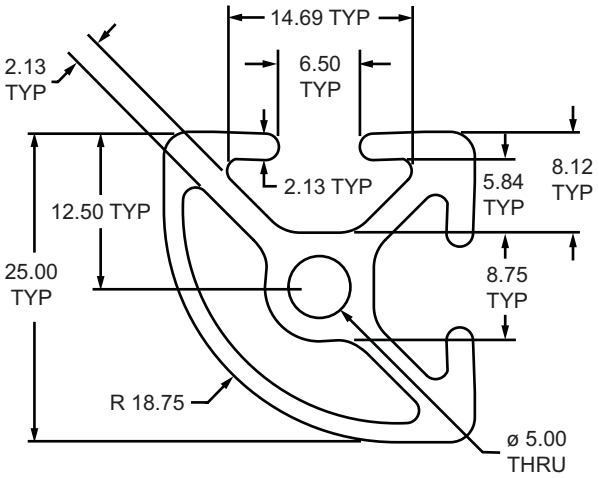

Part No.	Series	Stock Length	Material	Alloy**	Finish	Drop Lock	Moment of Inertia	Surface Area	Yield Strength	Modulus of Elasticity	Weight
25-2527 *	25	4 or 6 Meter	Aluminum	6105-T5	Clear Anodize	2°	IX = 1.4578 cm^4 IY = 1.4578 cm^4	2.428 cm^2	241.1 N / mm^2	70,326.5 N / mm^2	0.6567 kg / m
25-2527-Black-FB		per millimeter			Black Anodize						

* The above profiles are sold per millimeter or stock length.

** Or comparable

Standard Machining Services

Service No.	Series	Service Description	Reference Page
25-7005	25	Cut to Length	859
25-7051	25	Access Hole	863
25-7042	25	Anchor Counterbore	865
25-7063	25	Tap Profile End	862

25-2514 Profile

25-2514 is a 25mm x 12.5mm metric 25 series rectangular T-slot profile with one open T-slot on one 25mm face. The profile is smooth, which makes it resistant to dirt and debris buildup while also being easy to clean. The 25-2514 profile is compatible with 25 series fasteners. It is a thinner profile that connects easily to flat surfaces and works well as a supporting structure or spacer for mounting accessories such as handles, door tracks, rails, valves or sensors.

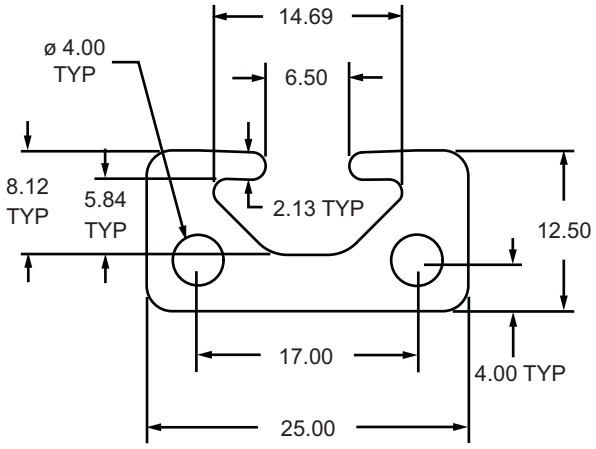

Part No.	Series	Stock Length	Material	Alloy**	Finish	Drop Lock	Moment of Inertia	Surface Area	Yield Strength	Modulus of Elasticity	Weight
25-2514 *	25	4 Meter	Aluminum	6105-T5	Clear Anodize	2°	IX = 0.3030 cm^4 IY = 1.3003 cm^4	2.022 cm^2	241.1 N / mm^2	70,326.5 N / mm^2	0.5458 kg / m
25-2514-Black-FB		per millimeter			Black Anodize						

* The above profiles are sold per millimeter or stock length.

** Or comparable

Standard Machining Services

Service No.	Series	Service Description	Reference Page
25-7005	25	Cut to Length	859
25-7051	25	Access Hole	863
25-7042	25	Anchor Counterbore	865
25-7007	25	Tap Profile End	862
25-7256	25	Drill Thru & Counterbore	866

50mm X 12.5mm T-Slotted Profile - Two Adjacent Open T-Slots

25-5013 Profile

25-5013 is a 50mm x 12.5mm metric 25 series rectangular T-slot profile with two adjacent open T-slots, two on one 50mm face. The profile is smooth, which makes it resistant to dirt and debris buildup while also being easy to clean. The 25-5013 profile is compatible with 25 series fasteners. It is a thinner profile that connects easily to flat surfaces and works well as a supporting structure or spacer for mounting accessories such as handles, door tracks, rails, valves or sensors.

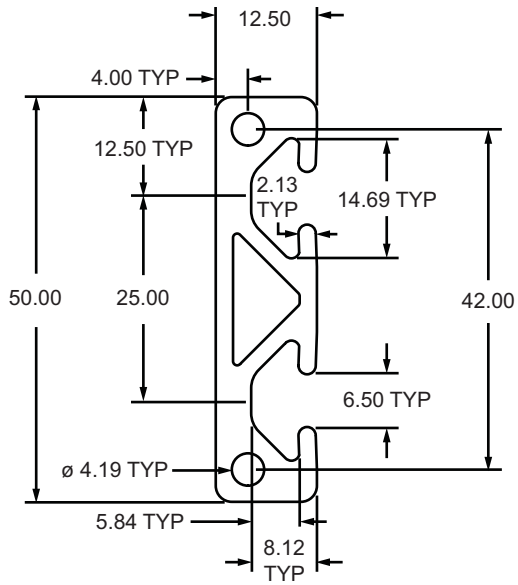

Part No.	Series	Stock Length	Material	Alloy**	Finish	Drop Lock	Moment of Inertia	Surface Area	Yield Strength	Modulus of Elasticity	Weight
25-5013 *	25	4 Meter	Aluminum	6105-T5	Clear Anodize	2°	IX = 8.8452 cm^4 IY = 0.5897 cm^4	3.528 cm^2	241.1 N / mm^2	70,326.5 N / mm^2	0.9627 kg / m
25-5013-Black-FB		per millimeter			Black Anodize						

* The above profiles are sold per millimeter or stock length.
** Or comparable

Standard Machining Services

Service No.	Series	Service Description	Reference Page
25-7005	25	Cut to Length	859
25-7051	25	Access Hole	863
25-7042	25	Anchor Counterbore	865
25-7009	25	Tap Profile End	862
25-7256	25	Drill Thru & Counterbore	866

25-2550 Profile

25-2550 is a 25mm x 50mm metric 25 series rectangular T-slot profile with six open T-slots, two on each 50mm face and one on each 25mm face. The profile is smooth, which makes it resistant to dirt and debris buildup while also being easy to clean. The 25-2550 profile is compatible with 25 series fasteners. The center cavity of the profile can be pressurized up to 1.034 N/mm² (150 psi), lending itself to work spaces, machine guards, displays and panel mount racks.

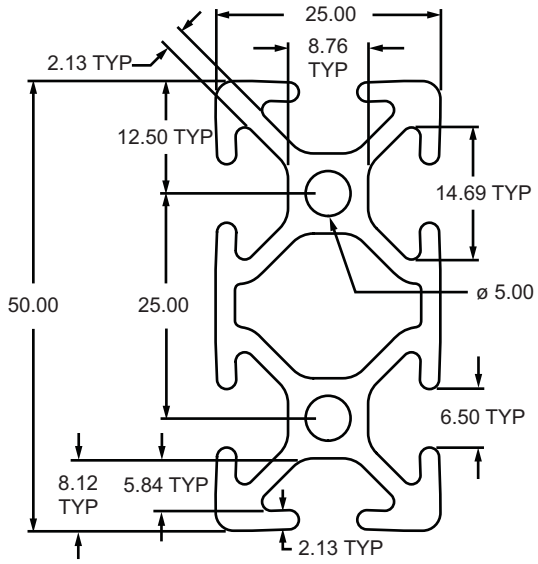

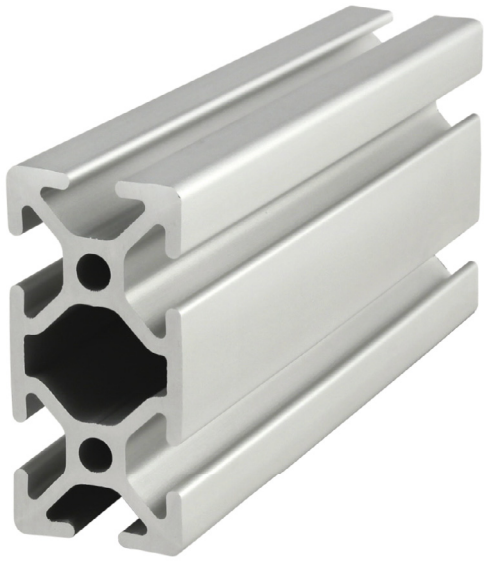

Part No.	Series	Stock Length	Material	Alloy**	Finish	Drop Lock	Moment of Inertia	Surface Area	Yield Strength	Modulus of Elasticity	Weight
25-2550 *	25	4 or 6 Meter	Aluminum	6105-T5	Clear Anodize	2°	IX = 12.1714 cm⁴ IY = 3.1966 cm⁴	4.857 cm²	241.1 N / mm²	70,326.5 N / mm²	1.3135 kg / m
25-2550-Black *		4 Meter			Black Anodize						
25-2550-Black-FB		per millimeter			Black Anodize						

* The above profiles are sold per millimeter or stock length.

** Or comparable

Standard Machining Services

Service No.	Series	Service Description	Reference Page
25-7000	25	Cut to Length	859
25-7051	25	Access Hole	863
25-7042	25	Anchor Counterbore	865
25-7047	25	Tap Profile End	862

25-2576 Profile

25-2576 is a 25mm x 75mm metric 25 series rectangular T-slot profile with eight open T-slots, three on each 75mm face and one on each 25mm face. The profile is smooth, which makes it resistant to dirt and debris while also easy to clean. The 25-2576 profile is compatible with 25 series fasteners and has center cavities that can be pressurized up to 1.034 N/mm² (150 psi). The eight open T-slots make this profile great for mounting accessories, flat plates and hinges while the ability to pressurize it lends it to projects with linear motion or machine frames.

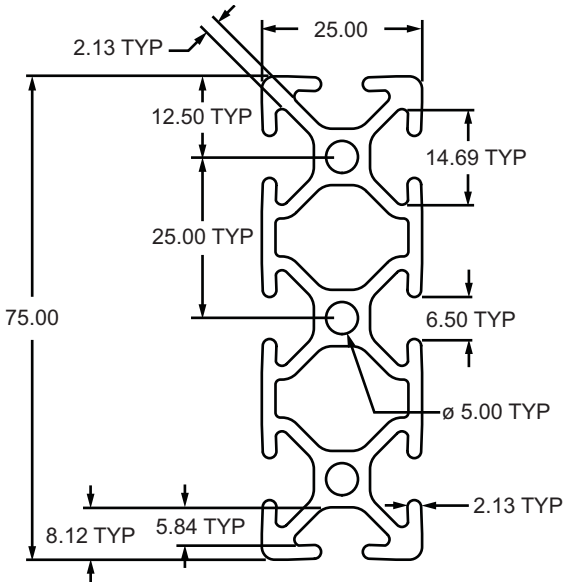

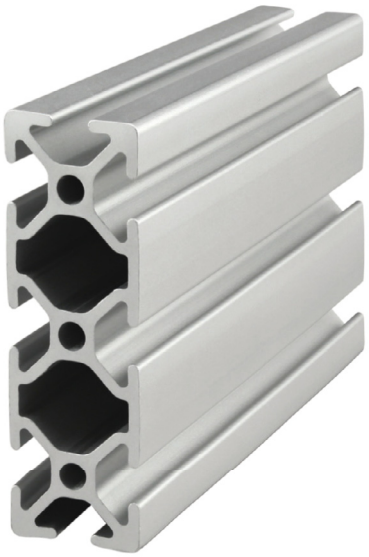

Part No.	Series	Stock Length	Material	Alloy**	Finish	Drop Lock	Moment of Inertia	Surface Area	Yield Strength	Modulus of Elasticity	Weight
25-2576 *	25	4 or 6 Meter	Aluminum	6105-T5	Clear Anodize	2°	IX = 37.2852 cm⁴ IY = 4.5921 cm⁴	6.889 cm²	241.1 N / mm²	70,326.5 N / mm²	1.8664 kg / m
25-2576-Black-FB		per millimeter			Black Anodize						

* The above profiles are sold per millimeter or stock length.
** Or comparable

Standard Machining Services

Service No.	Series	Service Description	Reference Page
25-7003	25	Cut to Length	859
25-7051	25	Access Hole	863
25-7042	25	Anchor Counterbore	865
25-7037	25	Tap Profile End	862

25-5050 Profile

25-5050 is a 50mm x 50mm metric 25 series square T-slot profile with eight open T-slots, two on each 50mm face. The profile is smooth, which makes it resistant to dirt and debris buildup while also being easy to clean. The 25-5050 profile is compatible with 25 series fasteners and has a center cavity that can be pressurized up to 1.034 N/mm^2 (150 psi). The eight open T-slots, strength, and ability to pressurize this profile make it a great choice for automation applications, machine frames and workstations.

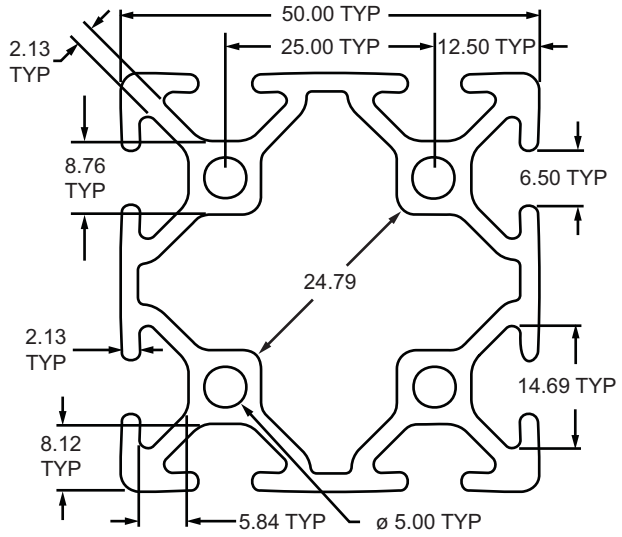

Part No.	Series	Stock Length	Material	Alloy**	Finish	Drop Lock	Moment of Inertia	Surface Area	Yield Strength	Modulus of Elasticity	Weight
25-5050 *	25	4 or 6 Meter	Aluminum	6105-T5	Clear Anodize	2°	IX = 21.1231 cm^4 IY = 21.1231 cm^4	7.487 cm^2	241.1 N / mm^2	70,326.5 N / mm^2	2.0239 kg / m
25-5050-Black *		4 Meter			Black Anodize						
25-5050-Black-FB		per millimeter			Black Anodize						

* The above profiles are sold per millimeter or stock length.

** Or comparable

Standard Machining Services

Service No.	Series	Service Description	Reference Page
25-7012	25	Cut to Length	859
25-7051	25	Access Hole	863
25-7042	25	Anchor Counterbore	865
25-7067	25	Tap Profile End	862

25-5010 Profile

25-5010 is a 50mm x 100mm metric 25 series rectangular T-slot profile with twelve open T-slots, two on each 50mm face and four on each 100mm face. The profile is smooth, which makes it resistant to dirt and debris buildup while also being easy to clean. The 25-5010 profile is compatible with 25 series fasteners, and has center cavities that can be pressurized up to 1.034 N/mm^2 (150 psi). The twelve open T-slots, strength, and ability to pressurize this profile make it a great choice for automation applications, machine frames and workstations.

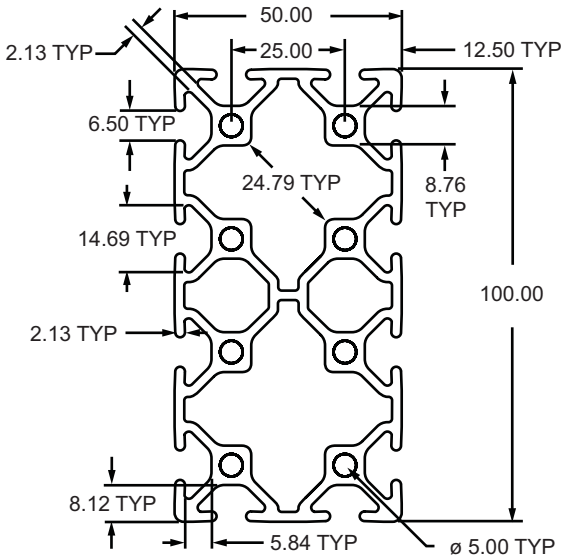

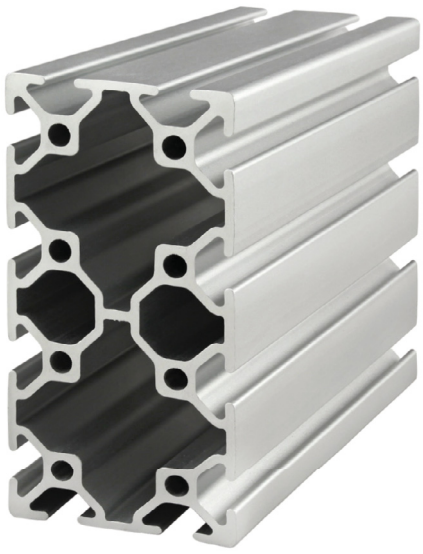

Part No.	Series	Stock Length	Material	Alloy**	Finish	Drop Lock	Moment of Inertia	Surface Area	Yield Strength	Modulus of Elasticity	Weight
25-5010 *	25	4 or 6 Meter	Aluminum	6105-T5	Clear Anodize	2°	IX = 132.0109 cm^4 IY = 39.1136 cm^4	13.743 cm^2	241.1 N / mm^2	70,326.5 N / mm^2	3.7133 kg / m
25-5010-Black-FB		per millimeter			Black Anodize						

* The above profiles are sold per millimeter or stock length.
** Or comparable

Standard Machining Services

Service No.	Series	Service Description	Reference Page
25-7013	25	Cut to Length	859
25-7051	25	Access Hole	863
25-7042	25	Anchor Counterbore	865
25-7039	25	Tap Profile End	862

30-3030 Profile

30-3030 is a 30mm x 30mm metric 30 series square T-slot profile with four open T-slots, one on each 30mm face. The profile is smooth, which makes it resistant to dirt and debris buildup while also being easy to clean. The 30-3030 profile is compatible with all 30 series fasteners. This profile lends itself to clean room applications, guards, enclosures, or workstations.

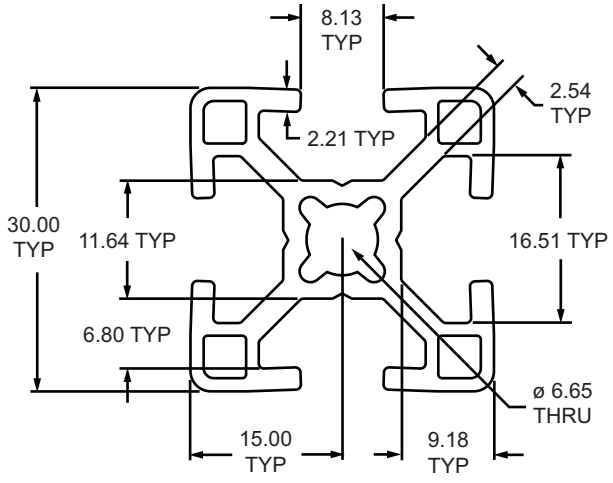

Part No.	Series	Stock Length	Material	Alloy**	Finish	Drop Lock	Moment of Inertia	Surface Area	Yield Strength	Modulus of Elasticity	Weight
30-3030 *	30	4 or 6 Meter	Aluminum	6105-T5	Clear Anodize	2°	IX = 2.7221 cm^4 IY = 2.7221 cm^4	3.144 cm^2	241.1 N / mm^2	70,326.5 N / mm^2	0.8715 kg / m
30-3030-Black-FB		per millimeter			Black Anodize						

* The above profiles are sold per millimeter or stock length.

** Or comparable

Standard Machining Services

Service No.	Series	Service Description	Reference Page
30-7010	30	Cut to Length	859
30-7246	30	Access Hole	863
30-7044	30	Anchor Counterbore	865
30-7059	30	Tap Profile End	862
30-7034	30	Bolt Connector	880

30-3001 Profile

30-3001 is a 30mm x 30mm metric 30 series square T-slot profile with one open T-slot on one 30mm face. The profile is smooth, which makes it resistant to dirt and debris buildup while also being easy to clean. The 30-3001 profile is compatible with 30 series fasteners. The three closed faces on this profile provide a clean, aesthetic look and it lends itself to furniture, displays, desks, trade show booths, or retail kiosks.

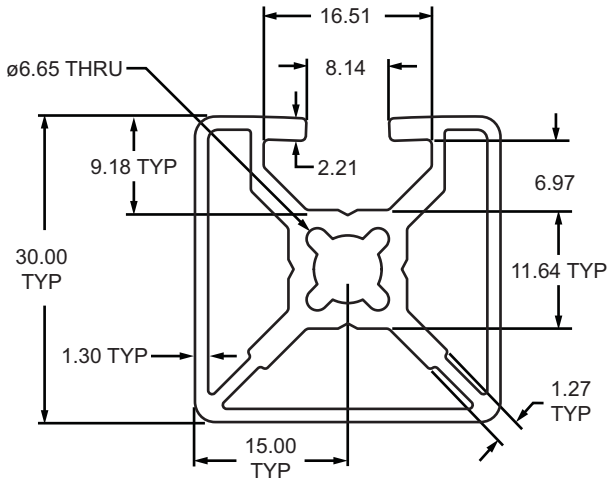

Part No.	Series	Stock Length	Material	Alloy**	Finish	Drop Lock	Moment of Inertia	Surface Area	Yield Strength	Modulus of Elasticity	Weight
30-3001 *	30	4 or 6 Meter	Aluminum	6105-T5	Clear Anodize	2°	IX = 2.7176 cm^4 IY = 2.6691 cm^4	3.067 cm^2	241.1 N / mm^2	70,326.5 N / mm^2	0.8220 kg / m
30-3001-Black-FB		per millimeter			Black Anodize						

* The above profiles are sold per millimeter or stock length.

** Or comparable

Standard Machining Services

Service No.	Series	Service Description	Reference Page
30-7010	30	Cut to Length	859
30-7246	30	Access Hole	863
30-7044	30	Anchor Counterbore	865
30-7059	30	Tap Profile End	862
30-7034	30	Bolt Connector	880

30mm X 30mm T-Slotted Profile - Two Adjacent Open T-Slots

30-3002 Profile

30-3002 is a 30mm x 30mm metric 30 series square T-slot profile with two adjacent open T-slots, one on two 30mm faces. The profile is smooth, which makes it resistant to dirt and debris buildup while also being easy to clean. The 30-3002 profile is compatible with 30 series fasteners. The two closed faces on this profile provide a clean, aesthetic look while also having the capability to mount additional profiles, parts and accessories. It lends itself to furniture, displays, desks, trade show booths, or retail kiosks.

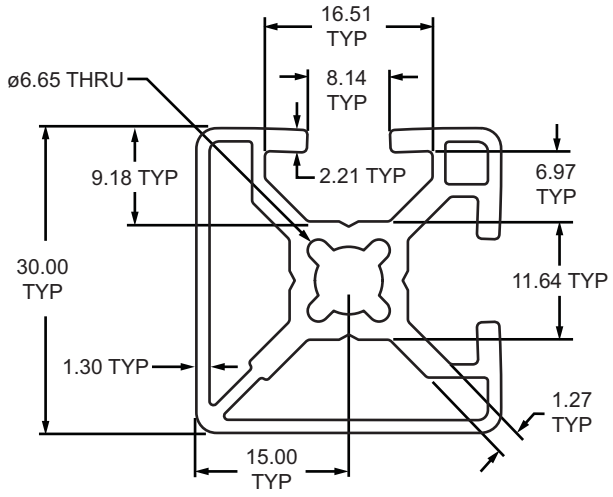

Part No.	Series	Stock Length	Material	Alloy**	Finish	Drop Lock	Moment of Inertia	Surface Area	Yield Strength	Modulus of Elasticity	Weight
30-3002 *	30	4 or 6 Meter	Aluminum	6105-T5	Clear Anodize	2°	IX = 2.6758 cm^4 IY = 2.6758 cm^4	3.066 cm^2	241.1 N / mm^2	70,326.5 N / mm^2	0.8217 kg / m
30-3002-Black-FB		per millimeter			Black Anodize						

* The above profiles are sold per millimeter or stock length.
** Or comparable

Standard Machining Services

Service No.	Series	Service Description	Reference Page
30-7010	30	Cut to Length	859
30-7246	30	Access Hole	863
30-7044	30	Anchor Counterbore	865
30-7059	30	Tap Profile End	862
30-7034	30	Bolt Connector	880

30mm X 30mm T-Slotted Profile - Three Adjacent Open T-Slots

30-3003 Profile

30-3003 is a 30mm x 30mm metric 30 series square T-slot profile with three adjacent open T-slots, one on three 30mm faces. The profile is smooth, which makes it resistant to dirt and debris buildup while also being easy to clean. The 30-3003 profile is compatible with 30 series fasteners. The three closed faces on this profile provide a clean, aesthetic look while also having the capability to mount additional profiles, parts and accessories. It lends itself to furniture, displays, desks, trade show booths, or retail kiosks.

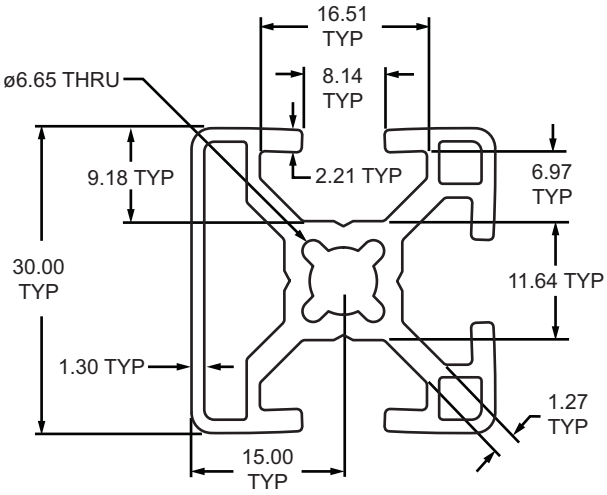

Part No.	Series	Stock Length	Material	Alloy**	Finish	Drop Lock	Moment of Inertia	Surface Area	Yield Strength	Modulus of Elasticity	Weight
30-3003 *	30	4 or 6 Meter	Aluminum	6105-T5	Clear Anodize	2°	IX = 2.6832 cm^4 IY = 2.6343 cm^4	3.065 cm^2	241.1 N / mm^2	70,326.5 N / mm^2	0.8214 kg / m
30-3003-Black-FB		per millimeter			Black Anodize						

* The above profiles are sold per millimeter or stock length.
** Or comparable

Standard Machining Services

Service No.	Series	Service Description	Reference Page
30-7010	30	Cut to Length	859
30-7246	30	Access Hole	863
30-7044	30	Anchor Counterbore	865
30-7059	30	Tap Profile End	862
30-7034	30	Bolt Connector	880

30mm X 30mm T-Slotted Profile - Two Opposite Open T-Slots

30-3004 Profile

30-3004 is a 30mm x 30mm metric 30 series square T-slot profile with two opposite open T-slots, one on two 30mm faces. The profile is smooth, which makes it resistant to dirt and debris buildup while also being easy to clean. The 30-3004 profile is compatible with 30 series fasteners. The placement of the T-slots allow support structures or panels to be easily placed into them while maintaining a continuous surface, lending itself to projects such as guarding, furniture or displays.

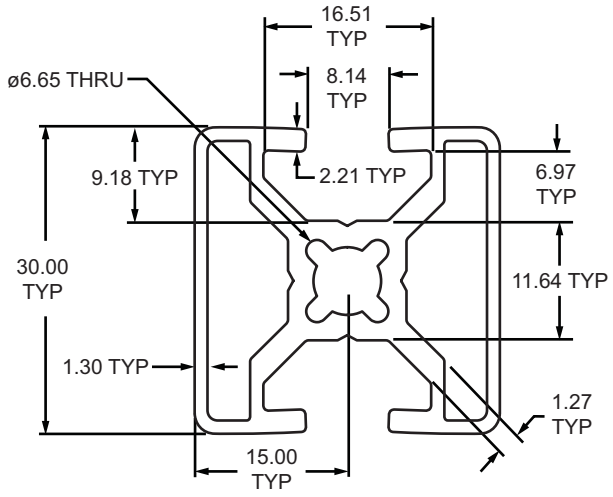

Part No.	Series	Stock Length	Material	Alloy**	Finish	Drop Lock	Moment of Inertia	Surface Area	Yield Strength	Modulus of Elasticity	Weight
30-3004 *	30	4 or 6 Meter	Aluminum	6105-T5	Clear Anodize	2°	IX = 2.6212 cm^4 IY = 2.5234 cm^4	2.986 cm^2	241.1 N / mm^2	70,326.5 N / mm^2	0.8002 kg / m
30-3004-Black-FB		per millimeter			Black Anodize						

* The above profiles are sold per millimeter or stock length.

** Or comparable

Standard Machining Services

Service No.	Series	Service Description	Reference Page
30-7010	30	Cut to Length	859
30-7246	30	Access Hole	863
30-7044	30	Anchor Counterbore	865
30-7059	30	Tap Profile End	862
30-7034	30	Bolt Connector	880

30mm X 30mm Quarter Round T-Slotted Profile - Two Open T-Slots

30-3022 Profile

30-3022 is a 30mm x 30mm metric 30 series quarter round T-slot profile with a 22mm radius curved back and two open T-slots, one on each of the 30mm profile faces. The profile is smooth, which makes it resistant to dirt and debris buildup while also being easy to clean. The 30-3022 profile is compatible with 30 series fasteners. This profile lends itself to workstations and displays because panels or other support structures can be easily placed in the T-slots allowing a continuous surface and aesthetic appearance.

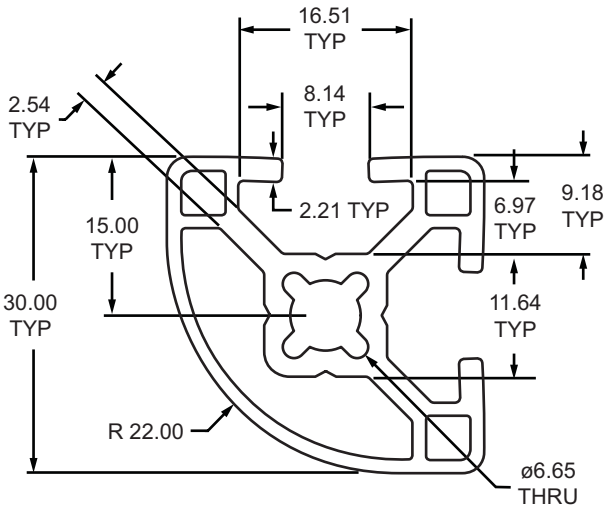

Part No.	Series	Stock Length	Material	Alloy**	Finish	Drop Lock	Moment of Inertia	Surface Area	Yield Strength	Modulus of Elasticity	Weight
30-3022 *	30	4 or 6 Meter	Aluminum	6105-T5	Clear Anodize	2°	IX = 2.2948 cm^4 IY = 2.2948 cm^4	2.840 cm^2	241.1 N / mm^2	70,326.5 N / mm^2	0.7612 kg / m
30-3022-Black-FB		per millimeter			Black Anodize						

* The above profiles are sold per millimeter or stock length.
** Or comparable

Standard Machining Services

Service No.	Series	Service Description	Reference Page
30-7010	30	Cut to Length	859
30-7246	30	Access Hole	863
30-7044	30	Anchor Counterbore	865
30-7059	30	Tap Profile End	862
30-7034	30	Bolt Connector	880

30-3060 Profile

30-3060 is a 30mm x 60mm metric 30 series rectangular T-slot profile with six open T-slots, two on each 60mm face and one on each 30mm face. The profile is smooth, which makes it resistant to dirt and debris buildup while also being easy to clean. The 30-3060 profile is compatible with 30 series fasteners and lends itself to work spaces, machine guards and displays.

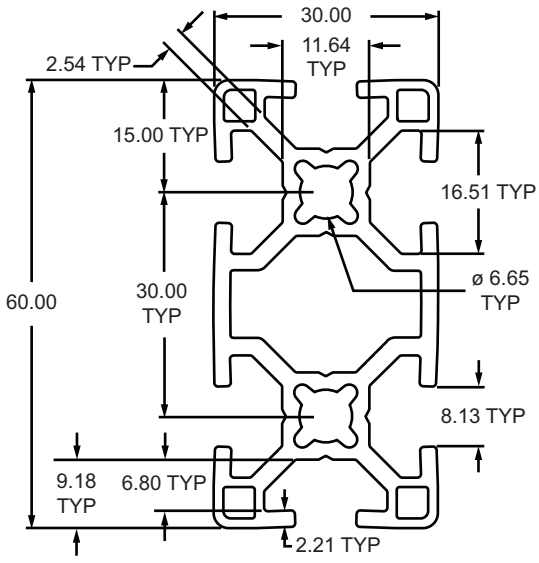

Part No.	Series	Stock Length	Material	Alloy**	Finish	Drop Lock	Moment of Inertia	Surface Area	Yield Strength	Modulus of Elasticity	Weight
30-3060 *	30	4 or 6 Meter	Aluminum	6105-T5	Clear Anodize	2°	IX = 5.4332 cm^4 IY = 19.6933 cm^4	5.928 cm^2	241.1 N / mm^2	70,326.5 N / mm^2	1.6428 kg / m
30-3060-Black-FB		per millimeter			Black Anodize						

* The above profiles are sold per millimeter or stock length.
** Or comparable

Standard Machining Services

Service No.	Series	Service Description	Reference Page
30-7020	30	Cut to Length	859
30-7246	30	Access Hole	863
30-7044	30	Anchor Counterbore	865
30-7048	30	Tap Profile End	862

30-6060 Profile

30-6060 is a 60mm x 60mm metric 30 series square T-slot profile with eight open T-slots, two on each 60mm face. The profile is smooth, which makes it resistant to dirt and debris buildup while also being easy to clean. The 30-6060 profile is compatible with 30 series fasteners. The eight open T-slots and strength make it a great choice for automation applications, machine frames and workstations.

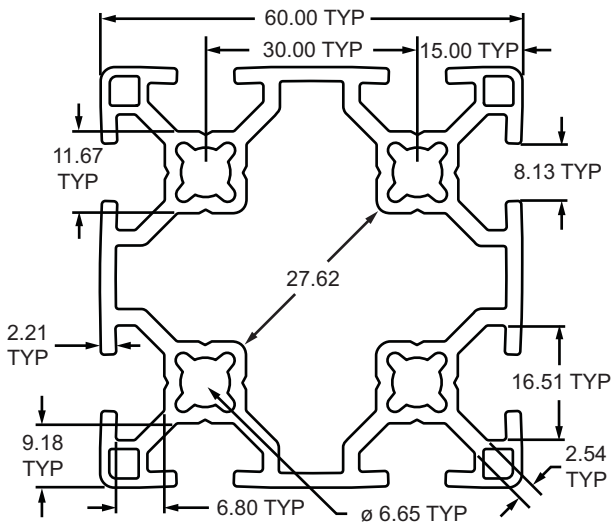

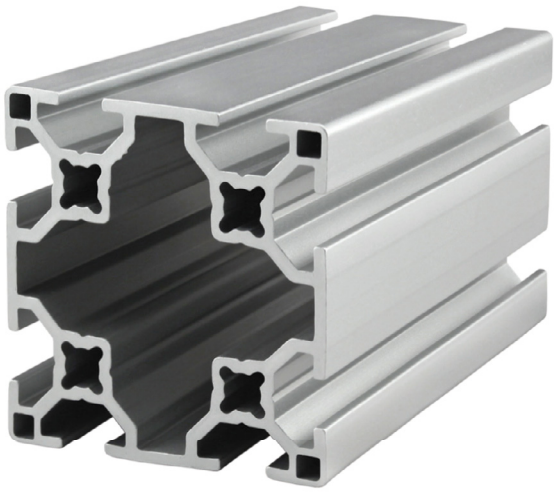

Part No.	Series	Stock Length	Material	Alloy**	Finish	Drop Lock	Moment of Inertia	Surface Area	Yield Strength	Modulus of Elasticity	Weight
30-6060 *	30	4 or 6 Meter	Aluminum	6105-T5	Clear Anodize	2°	IX = 36.3307 cm^4 IY = 36.3307 cm^4	9.299 cm^2	241.1 N / mm^2	70,326.5 N / mm^2	2.5787 kg / m
30-6060-Black-FB		per millimeter			Black Anodize						

* The above profiles are sold per millimeter or stock length.

** Or comparable

Standard Machining Services

Service No.	Series	Service Description	Reference Page
30-7030	30	Cut to Length	859
30-7246	30	Access Hole	863
30-7044	30	Anchor Counterbore	865
30-7056	30	Tap Profile End	862

40mm X 40mm Ultra-Lite T-Slotted Profile - Four Open T-Slots

40-4040-UL Profile

40-4040-UL is a 40mm x 40mm ultra-lite metric 40 series square T-slot profile with four open T-slots, one on each 40mm face. The profile is smooth, which makes it resistant to dirt and debris buildup while also being easy to clean. The 40-4040-UL profile is compatible with all 40 series fasteners. This profile lends itself to clean room applications, guards, enclosures, or work stations. The four open T-slots enable access from any direction and are useful for mounting accessories.

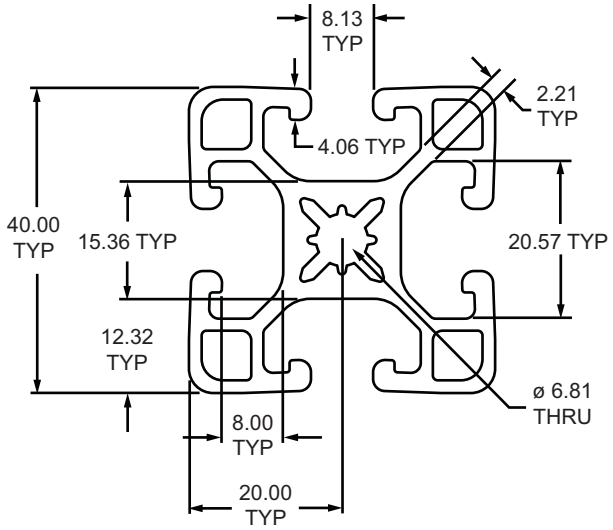

Part No.	Series	Stock Length	Material	Alloy**	Finish	Drop Lock	Moment of Inertia	Surface Area	Yield Strength	Modulus of Elasticity	Weight
40-4040-UL *	40	4 or 6 Meter	Aluminum	6105-T5	Clear Anodize	2°	IX = 8.7059 cm^4 IY = 8.7059 cm^4	5.750 cm^2	241.1 N / mm^2	70,326.5 N / mm^2	1.5533 kg / m
40-4040-UL-Black *		4 Meter			Black Anodize						
40-4040-UL-Black-FB		per millimeter			Black Anodize						

* The above profiles are sold per millimeter or stock length.

** Or comparable

Standard Machining Services

Service No.	Series	Service Description	Reference Page
40-7010	40	Cut to Length	859
40-7050	40	Access Hole	863
40-7044	40	Anchor Counterbore	865
40-7059	40	Tap Profile End	862

40-4040-Lite Profile

40-4040-Lite is a 40mm x 40mm lite metric 40 series square T-slot profile with four open T-slots, one on each 40mm face. The profile is smooth, which makes it resistant to dirt and debris buildup while also being easy to clean. The 40-4040-Lite profile is compatible with all 40 series fasteners. This profile lends itself to machine guards, enclosures, work benches, or displays. The four open T-slots enable access from any direction and are useful for mounting accessories.

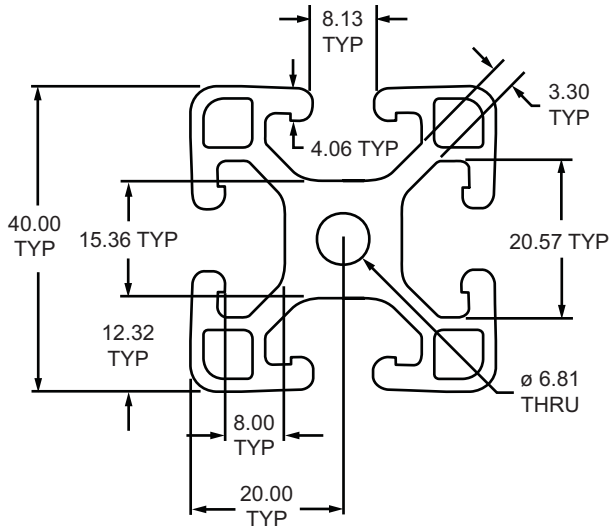

Part No.	Series	Stock Length	Material	Alloy**	Finish	Drop Lock	Moment of Inertia	Surface Area	Yield Strength	Modulus of Elasticity	Weight
40-4040-Lite *	40	4 or 6 Meter	Aluminum	6105-T5	Clear Anodize	2°	IX = 9.3983 cm^4 IY = 9.3983 cm^4	6.608 cm^2	241.1 N / mm^2	70,326.5 N / mm^2	1.7860 kg / m
40-4040-Lite-Black *		4 Meter			Black Anodize						
40-4040-Lite-Black-FB		per millimeter			Black Anodize						

* The above profiles are sold per millimeter or stock length.
** Or comparable

Standard Machining Services

Service No.	Series	Service Description	Reference Page
40-7010	40	Cut to Length	859
40-7050	40	Access Hole	863
40-7044	40	Anchor Counterbore	865
40-7059	40	Tap Profile End	862

40-4040 Profile

40-4040 is a 40mm x 40mm metric 40 series square T-slot profile with four open T-slots, one on each 40mm face. The profile is smooth, which makes it resistant to dirt and debris buildup while also being easy to clean. The 40-4040 profile is compatible with all 40 series fasteners. This profile is the most heavy-duty in the 40-4040 profile family and lends itself to clean room applications, guards, enclosures, or workstations. The four open T-slots enable access from any direction and are useful for mounting accessories.

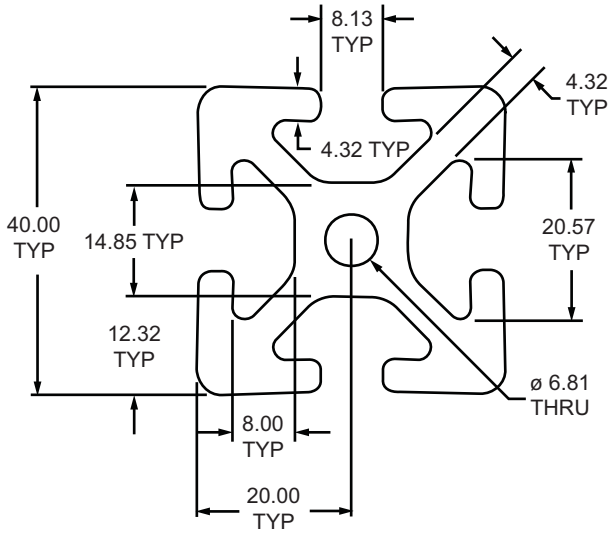

Part No.	Series	Stock Length	Material	Alloy**	Finish	Drop Lock	Moment of Inertia	Surface Area	Yield Strength	Modulus of Elasticity	Weight
40-4040 *	40	4 or 6 Meter	Aluminum	6105-T5	Clear Anodize	2°	IX = 13.7870 cm^4 IY = 13.7870 cm^4	8.742 cm^2	241.1 N / mm^2	70,326.5 N / mm^2	2.3640 kg / m
40-4040-Black *		4 Meter			Black Anodize						
40-4040-Black-FB		per millimeter			Black Anodize						

* The above profiles are sold per millimeter or stock length.
** Or comparable

Standard Machining Services

Service No.	Series	Service Description	Reference Page
40-7010	40	Cut to Length	859
40-7050	40	Access Hole	863
40-7044	40	Anchor Counterbore	865
40-7059	40	Tap Profile End	862

40-4001 Profile

40-4001 is a 40mm x 40mm metric 40 series square T-slot profile with one open T-slot on one 40mm face. The profile is smooth, which makes it resistant to dirt and debris buildup while also being easy to clean. The 40-4001 profile is compatible with 40 series fasteners. The three closed faces on this profile provide a clean, aesthetic look and it lends itself to furniture, displays, desks, trade show booths, or retail kiosks.

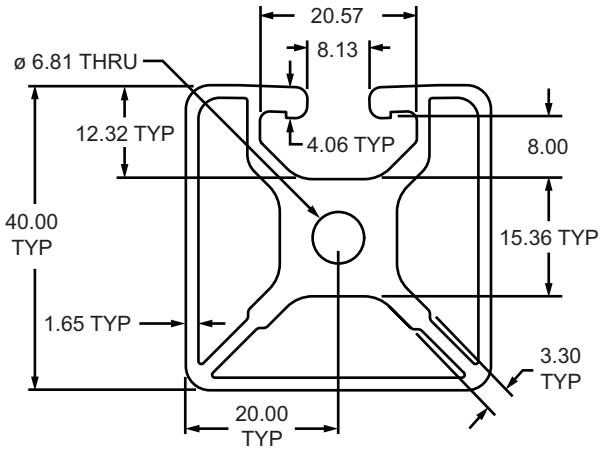

Part No.	Series	Stock Length	Material	Alloy**	Finish	Drop Lock	Moment of Inertia	Surface Area	Yield Strength	Modulus of Elasticity	Weight
40-4001 *	40	4 or 6 Meter	Aluminum	6105-T5	Clear Anodize	2°	IX = 8.5389 cm^4 IY = 8.2599 cm^4	5.968 cm^2	241.1 N / mm^2	70,326.5 N / mm^2	1.6142 kg / m
40-4001-Black-FB		per millimeter			Black Anodize						

* The above profiles are sold per millimeter or stock length.
** Or comparable

Standard Machining Services

Service No.	Series	Service Description	Reference Page
40-7010	40	Cut to Length	859
40-7050	40	Access Hole	863
40-7044	40	Anchor Counterbore	865
40-7059	40	Tap Profile End	862

40mm X 40mm T-Slotted Profile - Two Adjacent Open T-Slots

40-4002 Profile

40-4002 is a 40mm x 40mm metric 40 series square T-slot profile with two adjacent open T-slots, one on two 40mm faces. The profile is smooth, which makes it resistant to dirt and debris buildup while also being easy to clean. The 40-4002 profile is compatible with 40 series fasteners. The two closed faces on this profile provide a clean, aesthetic look and lends itself to furniture, displays, desks, trade show booths, or retail kiosks.

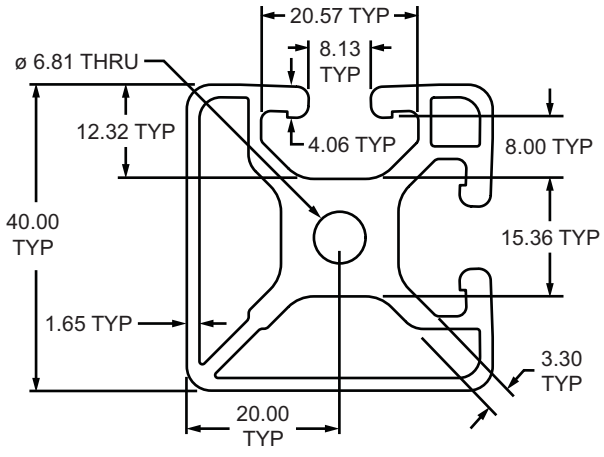

Part No.	Series	Stock Length	Material	Alloy**	Finish	Drop Lock	Moment of Inertia	Surface Area	Yield Strength	Modulus of Elasticity	Weight
40-4002 *	40	4 or 6 Meter	Aluminum	6105-T5	Clear Anodize	2°	IX = 8.6303 cm^4 IY = 8.6303 cm^4	6.118 cm^2	241.1 N / mm^2	70,326.5 N / mm^2	1.6535 kg / m
40-4002-Black *		4 Meter			Black Anodize						
40-4002-Black-FB		per millimeter			Black Anodize						

* The above profiles are sold per millimeter or stock length.
** Or comparable

Standard Machining Services

Service No.	Series	Service Description	Reference Page
40-7010	40	Cut to Length	859
40-7050	40	Access Hole	863
40-7044	40	Anchor Counterbore	865
40-7059	40	Tap Profile End	862

40mm X 40mm T-Slotted Profile - Three Adjacent Open T-Slots

40-4003 Profile

40-4003 is a 40mm x 40mm metric 40 series square T-slot profile with three adjacent open T-slots, one on three 40mm faces. The profile is smooth, which makes it resistant to dirt and debris buildup while also being easy to clean. The 40-4003 profile is compatible with 40 series fasteners. The closed face on this profile provides a clean, aesthetic look while also having the capability to mount additional profiles, parts and accessories. It lends itself to furniture, displays, desks, trade show booths, or retail kiosks.

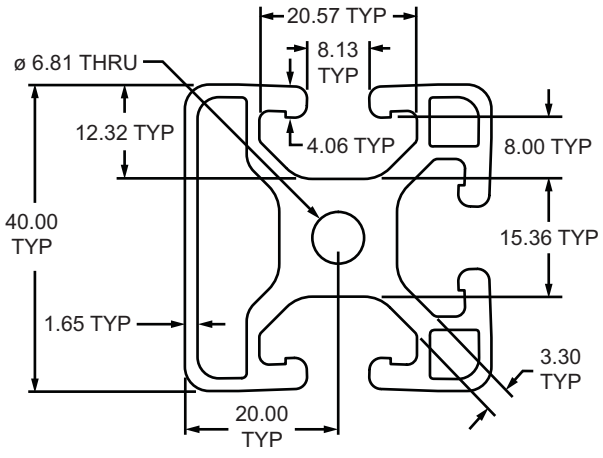

Part No.	Series	Stock Length	Material	Alloy**	Finish	Drop Lock	Moment of Inertia	Surface Area	Yield Strength	Modulus of Elasticity	Weight
40-4003 *	40	4 or 6 Meter	Aluminum	6105-T5	Clear Anodize	2°	IX = 9.0094 cm^4 IY = 8.7823 cm^4	6.268 cm^2	241.1 N / mm^2	70,326.5 N / mm^2	1.6947 kg / m
40-4003-Black *		4 Meter			Black Anodize						
40-4003-Black-FB		per millimeter			Black Anodize						

* The above profiles are sold per millimeter or stock length.
** Or comparable

Standard Machining Services

Service No.	Series	Service Description	Reference Page
40-7010	40	Cut to Length	859
40-7050	40	Access Hole	863
40-7044	40	Anchor Counterbore	865
40-7059	40	Tap Profile End	862

40mm X 40mm T-Slotted Profile - Two Opposite Open T-Slots

40-4004 Profile

40-4004 is a 40mm x 40mm metric 40 series square T-slot profile with two opposite open T-slots, one on two 40mm faces. The profile is smooth, which makes it resistant to dirt and debris buildup while also being easy to clean. The 40-4004 profile is compatible with 40 series fasteners. The placement of the T-slots allow support structures or panels to be easily placed into them while maintaining a continuous surface, lending itself to projects such as guarding, furniture or displays.

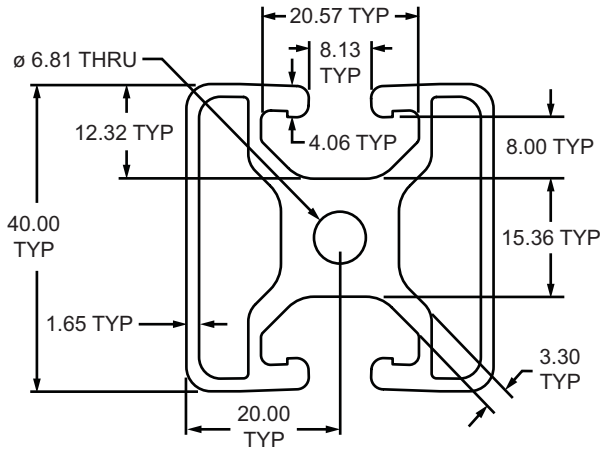

Part No.	Series	Stock Length	Material	Alloy**	Finish	Drop Lock	Moment of Inertia	Surface Area	Yield Strength	Modulus of Elasticity	Weight
40-4004 *	40	4 or 6 Meter	Aluminum	6105-T5	Clear Anodize	2°	IX = 8.6050 cm^4 IY = 8.0430 cm^4	5.954 cm^2	241.1 N / mm^2	70,326.5 N / mm^2	1.6106 kg / m
40-4004-Black-FB		per millimeter			Black Anodize						

* The above profiles are sold per millimeter or stock length.

** Or comparable

Standard Machining Services

Service No.	Series	Service Description	Reference Page
40-7010	40	Cut to Length	859
40-7050	40	Access Hole	863
40-7044	40	Anchor Counterbore	865
40-7059	40	Tap Profile End	862

40mm X 40mm Quarter Round Lite T-Slotted Profile - Two Open T-Slots

40-4030-Lite Profile

40-4030-Lite is a 40mm x 40mm metric 40 series quarter round T-slot profile with a 30mm radius curved back and two open T-slots, one on each of the 40mm profile faces. The profile is smooth, which makes it resistant to dirt and debris buildup while also being easy to clean. The 40-4030-Lite profile is compatible with 40 series fasteners. This profile lends itself to workstations and displays because panels or other support structures can be easily placed in the T-slots allowing a continuous surface and aesthetic appearance.

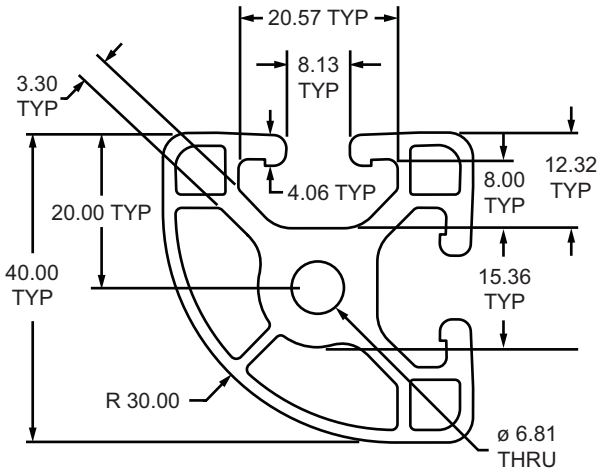

Part No.	Series	Stock Length	Material	Alloy**	Finish	Drop Lock	Moment of Inertia	Surface Area	Yield Strength	Modulus of Elasticity	Weight
40-4030-Lite *	40	4 or 6 Meter	Aluminum	6105-T5	Clear Anodize	2°	IX = 7.5590 cm^4 IY = 7.5590 cm^4	5.729 cm^2	241.1 N / mm^2	70,326.5 N / mm^2	1.5497 kg / m
40-4030-Lite-Black-FB		per millimeter			Black Anodize						

* The above profiles are sold per millimeter or stock length.
** Or comparable

Standard Machining Services

Service No.	Series	Service Description	Reference Page
40-7010	40	Cut to Length	859
40-7050	40	Access Hole	863
40-7044	40	Anchor Counterbore	865
40-7059	40	Tap Profile End	862

40mm T-slotted Profile 30 Degree Radius - Two Opposite Open T-Slots

40-4093 Profile

40-4093 is a 40mm metric 40 series T-slot profile with a 30 degree radius and two opposite open T-slots, one on each of the 40mm profile faces. The profile is smooth, which makes it resistant to dirt and debris buildup while also being easy to clean. The 40-4093 profile is compatible with 40 series fasteners. This profile lends itself to workstations and displays because it provides an aesthetic appearance and panels or other support structures can be easily placed in the T-slots.

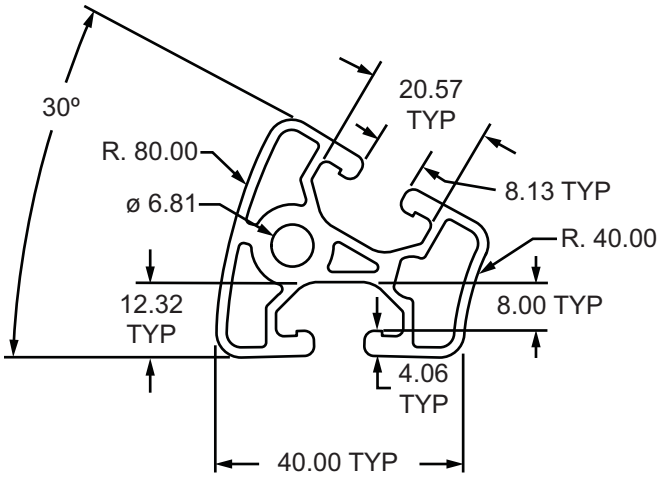

Part No.	Series	Stock Length	Material	Alloy**	Finish	Drop Lock	Moment of Inertia	Surface Area	Yield Strength	Modulus of Elasticity	Weight
40-4093 *	40	4 Meter	Aluminum	6105-T5	Clear Anodize	2°	—	4.711 cm^2	241.1 N / mm^2	70,326.5 N / mm^2	1.2742 kg / m
40-4093-Black-FB		per millimeter			Black Anodize						

* The above profiles are sold per millimeter or stock length.
** Or comparable

Standard Machining Services

Service No.	Series	Service Description	Reference Page
40-7020	40	Cut to Length	859
40-7059	40	Tap Profile End	862

40mm T-slotted Profile 45 Degree Radius - Two Opposite Open T-Slots

40-4094 Profile

40-4094 is a 40mm metric 40 series T-slot profile with a 45 degree radius and two opposite open T-slots, one on each of the 40mm profile faces. The profile is smooth, which makes it resistant to dirt and debris buildup while also being easy to clean. The 40-4094 profile is compatible with 40 series fasteners. This profile lends itself to workstations and displays because panels or other support structures can be easily placed in the T-slots allowing a continuous surface and aesthetic appearance.

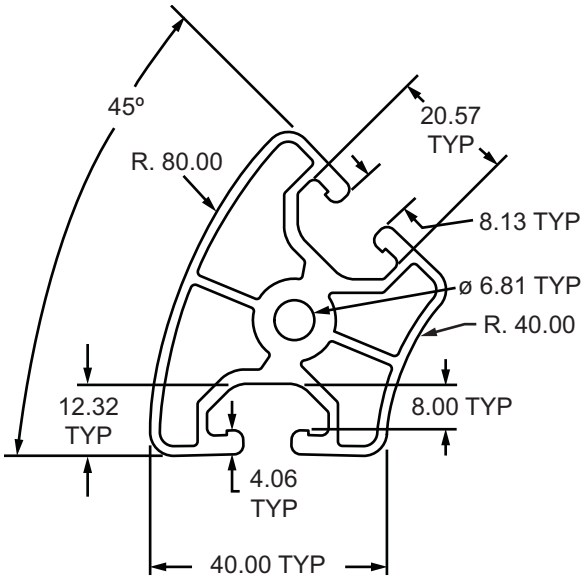

Part No.	Series	Stock Length	Material	Alloy**	Finish	Drop Lock	Moment of Inertia	Surface Area	Yield Strength	Modulus of Elasticity	Weight
40-4094 *	40	4 Meter	Aluminum	6105-T5	Clear Anodize	2°	—	6.309 cm^2	241.1 N / mm^2	70,326.5 N / mm^2	1.7054 kg / m
40-4094-Black *		4 Meter			Black Anodize						
40-4094-Black-FB		per millimeter			Black Anodize						

* The above profiles are sold per millimeter or stock length.

** Or comparable

Standard Machining Services

Service No.	Series	Service Description	Reference Page
40-7020	40	Cut to Length	859
40-7059	40	Tap Profile End	862

40mm T-slotted Profile 60 Degree Radius - Two Opposite Open T-Slots

40-4096 Profile

40-4096 is a 40mm metric 40 series T-slot profile with a 60 degree radius and two opposite open T-slots, one on each of the 40mm profile faces. The profile is smooth, which makes it resistant to dirt and debris buildup while also being easy to clean. The 40-4096 profile is compatible with 40 series fasteners. This profile lends itself to workstations, kiosks or point of purchase displays because panels or other support structures can be easily placed in the T-slots allowing a continuous surface and aesthetic appearance.

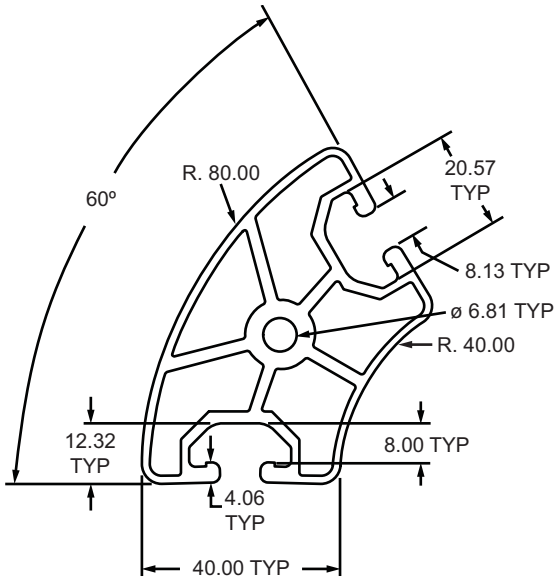

Part No.	Series	Stock Length	Material	Alloy**	Finish	Drop Lock	Moment of Inertia	Surface Area	Yield Strength	Modulus of Elasticity	Weight
40-4096 *	40	4 Meter	Aluminum	6105-T5	Clear Anodize	2°	—	7.828 cm^2	241.1 N / mm^2	70,326.5 N / mm^2	2.1170 kg / m
40-4096-Black-FB		per millimeter			Black Anodize						

* The above profiles are sold per millimeter or stock length.

** Or comparable

Standard Machining Services

Service No.	Series	Service Description	Reference Page
40-7020	40	Cut to Length	859
40-7059	40	Tap Profile End	862

40mm X 40mm Lite 45 Degree T-Slotted Profile - Two Adjacent Open T-Slots

40-4045-Lite Profile

40-4045-Lite is a 40mm x 40mm metric 40 series 45 degree closed back T-slot profile with two open T-slots, one on each of the 40mm profile faces. The profile is smooth, which makes it resistant to dirt and debris buildup while also being easy to clean. The 40-4045-Lite profile is compatible with 40 series fasteners. This profile lends itself to large workstations and displays because panels or other support structures can be easily placed in the T-slots allowing a continuous surface and aesthetic appearance.

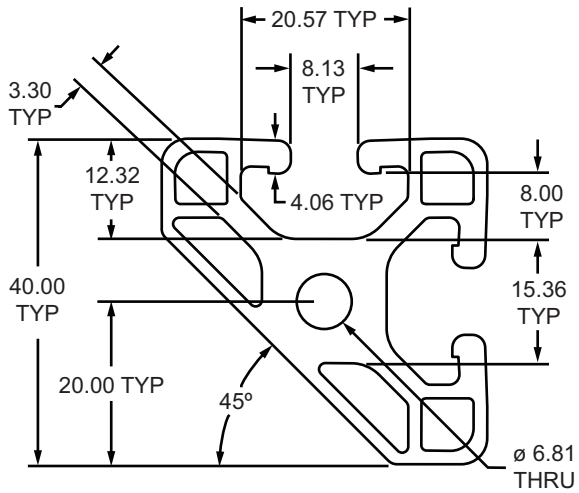

Part No.	Series	Stock Length	Material	Alloy**	Finish	Drop Lock	Moment of Inertia	Surface Area	Yield Strength	Modulus of Elasticity	Weight
40-4045-Lite *	40	4 or 6 Meter	Aluminum	6105-T5	Clear Anodize	2°	IX = 6.9991 cm^4 IY = 7.0047 cm^4	5.541 cm^2	241.1 N / mm^2	70,326.5 N / mm^2	1.4996 kg / m
40-4045-Lite-Black-FB		per millimeter			Black Anodize						

* The above profiles are sold per millimeter or stock length.

** Or comparable

Standard Machining Services

Service No.	Series	Service Description	Reference Page
40-7010	40	Cut to Length	859
40-7050	40	Access Hole	863
40-7044	40	Anchor Counterbore	865
40-7059	40	Tap Profile End	862

40-4020 Profile

40-4020 is a 40mm x 20mm metric 40 series rectangular T-slot profile with one open T-slot on one 40mm face. The profile is smooth, which makes it resistant to dirt and debris buildup while also being easy to clean. The 40-4020 profile is compatible with 40 series fasteners. It is a thinner profile that connects easily to flat surfaces and works well as a supporting structure or spacer for mounting accessories such as handles, door tracks, rails, valves or sensors.

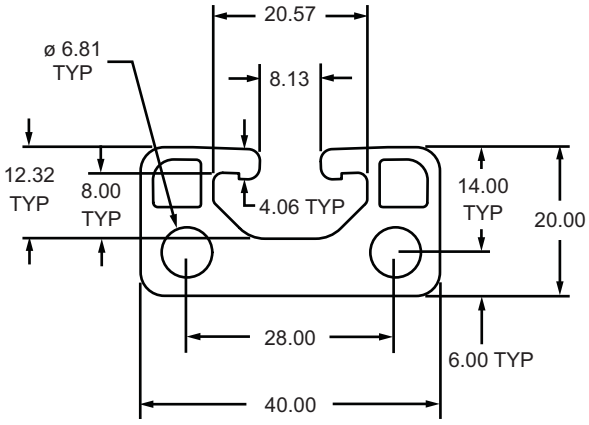

Part No.	Series	Stock Length	Material	Alloy**	Finish	Drop Lock	Moment of Inertia	Surface Area	Yield Strength	Modulus of Elasticity	Weight
40-4020 *	40	4 Meter	Aluminum	6105-T5	Clear Anodize	2°	IX = 1.8260 cm^4 IY = 6.6587 cm^4	4.550 cm^2	241.1 N / mm^2	70,326.5 N / mm^2	1.2312 kg / m
40-4020-Black-FB		per millimeter			Black Anodize						

* The above profiles are sold per millimeter or stock length.

** Or comparable

Standard Machining Services

Service No.	Series	Service Description	Reference Page
40-7010	40	Cut to Length	859
40-7050	40	Access Hole	863
40-7044	40	Anchor Counterbore	865
40-7015	40	Tap Profile End	862
40-7257	40	Drill Thru & Counterbore	866

80mm X 20mm T-Slotted Profile - Two Adjacent Open T-Slots

40-8020 Profile

40-8020 is a 80mm x 20mm metric 40 series rectangular T-slot profile with two adjacent open T-slots, two on one 80mm face. The profile is smooth, which makes it resistant to dirt and debris buildup while also being easy to clean. The 40-8020 profile is compatible with 40 series fasteners. It is a thinner profile that connects easily to flat surfaces and works well as a supporting structure or spacer for mounting accessories such as handles, door tracks, rails, valves or sensors.

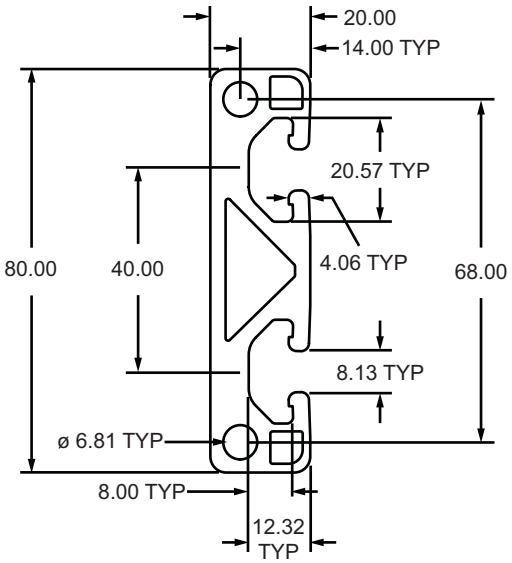

Part No.	Series	Stock Length	Material	Alloy**	Finish	Drop Lock	Moment of Inertia	Surface Area	Yield Strength	Modulus of Elasticity	Weight
40-8020 *	40	4 Meter	Aluminum	6105-T5	Clear Anodize	2°	IX = 49.6609 cm^4 IY = 3.7286 cm^4	8.482 cm^2	241.1 N / mm^2	70,326.5 N / mm^2	2.2960 kg / m
40-8020-Black-FB		per millimeter			Black Anodize						

* The above profiles are sold per millimeter or stock length.
** Or comparable

Standard Machining Services

Service No.	Series	Service Description	Reference Page
40-7020	40	Cut to Length	859
40-7050	40	Access Hole	863
40-7044	40	Anchor Counterbore	865
40-7017	40	Tap Profile End	862
40-7257	40	Drill Thru & Counterbore	866

40mm X 80mm Ultra-Lite T-Slotted Profile - Six Open T-Slots

40-4080-UL Profile

40-4080-UL is a 40mm x 80mm ultra-lite metric 40 series rectangular T-slot profile with six open T-slots, two on each 80mm face and one on each 40mm face. The profile is smooth, which makes it resistant to dirt and debris buildup while also being easy to clean. The 40-4080-UL profile is compatible with 40 series fasteners. It is the lightest in the 40-4080 profile family and the center cavity of the profile can be pressurized up to 1.034 N/mm^2 (150 psi), lending itself to work spaces, machine guards, displays and panel mount racks.

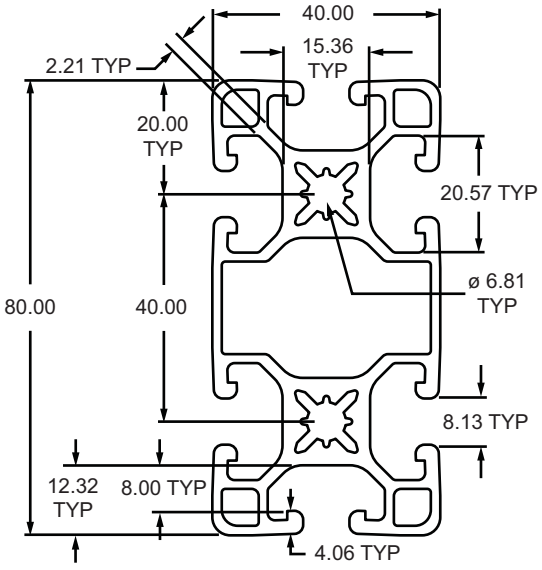

Part No.	Series	Stock Length	Material	Alloy**	Finish	Drop Lock	Moment of Inertia	Surface Area	Yield Strength	Modulus of Elasticity	Weight
40-4080-UL *	40	4 or 6 Meter	Aluminum	6105-T5	Clear Anodize	2°	IX = 63.1358 cm^4 IY = 15.4754 cm^4	9.792 cm^2	241.1 N / mm^2	70,326.5 N / mm^2	2.6485 kg / m
40-4080-UL-Black-FB		per millimeter			Black Anodize						

* The above profiles are sold per millimeter or stock length.
** Or comparable

Standard Machining Services

Service No.	Series	Service Description	Reference Page
40-7020	40	Cut to Length	859
40-7050	40	Access Hole	863
40-7044	40	Anchor Counterbore	865
40-7048	40	Tap Profile End	862

40mm X 80mm Lite T-Slotted Profile - Six Open T-Slots

40-4080-Lite Profile

40-4080-Lite is a 40mm x 80mm lite metric 40 series rectangular T-slot profile with six open T-slots, two on each 80mm face and one on each 40mm face. The profile is smooth, which makes it resistant to dirt and debris buildup while also being easy to clean. The 40-4080-Lite profile is compatible with 40 series fasteners. The center cavity of the profile can be pressurized up to 1.034 N/mm² (150 psi), lending itself to work spaces, machine guards, displays and panel mount racks.

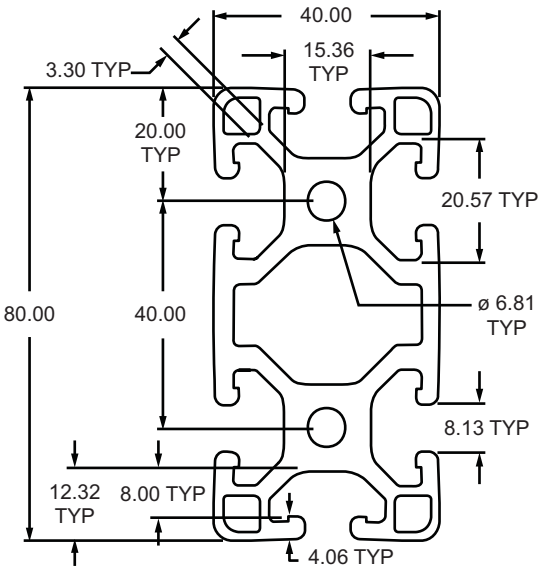

Part No.	Series	Stock Length	Material	Alloy**	Finish	Drop Lock	Moment of Inertia	Surface Area	Yield Strength	Modulus of Elasticity	Weight
40-4080-Lite *	40	4 or 6 Meter	Aluminum	6105-T5	Clear Anodize	2°	IX = 71.8926 cm⁴ IY = 18.7791 cm⁴	12.532 cm²	241.1 N / mm²	70,326.5 N / mm²	3.3876 kg / m
40-4080-Lite-Black *		4 Meter			Black Anodize						
40-4080-Lite-Black-FB		per millimeter			Black Anodize						

* The above profiles are sold per millimeter or stock length.
** Or comparable

Standard Machining Services

Service No.	Series	Service Description	Reference Page
40-7020	40	Cut to Length	859
40-7050	40	Access Hole	863
40-7044	40	Anchor Counterbore	865
40-7048	40	Tap Profile End	862

40-4080 Profile

40-4080 is a 40mm x 80mm metric 40 series rectangular T-slot profile with six open T-slots, two on each 80mm face and one on each 40mm face. The profile is smooth, which makes it resistant to dirt and debris buildup while also being easy to clean. The 40-4080 profile is compatible with 40 series fasteners. It is the heavy-duty profile in the 40-4080 profile family and the center cavity of the profile can be pressurized up to 1.034 N/mm² (150 psi), lending itself to work spaces, machine guards, displays and panel mount racks.

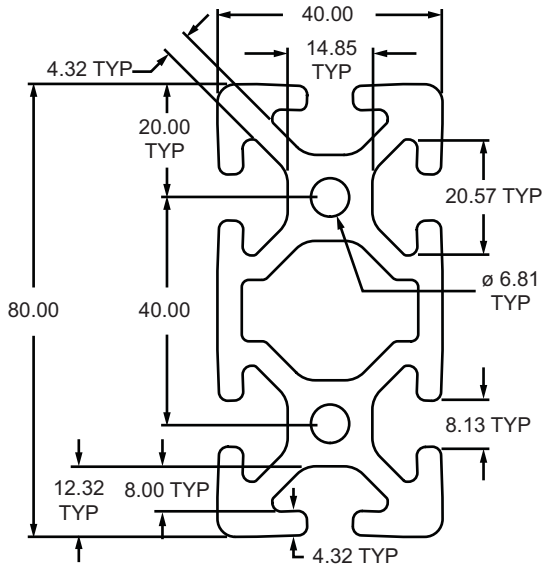

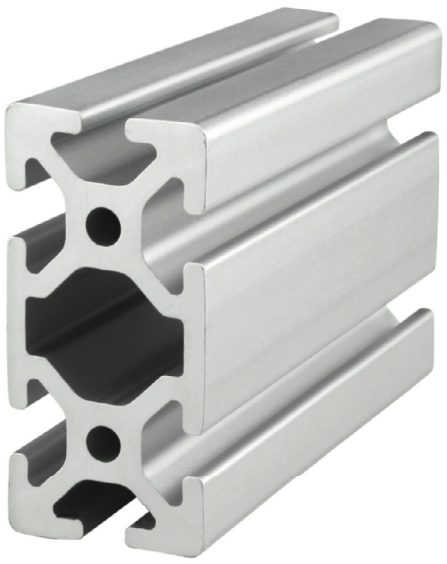

Part No.	Series	Stock Length	Material	Alloy**	Finish	Drop Lock	Moment of Inertia	Surface Area	Yield Strength	Modulus of Elasticity	Weight
40-4080 *	40	4 or 6 Meter	Aluminum	6105-T5	Clear Anodize	2°	IX = 97.6617 cm⁴ IY = 25.2917 cm⁴	15.332 cm²	241.1 N / mm²	70,326.5 N / mm²	4.1464 kg / m
40-4080-Black *		4 Meter			Black Anodize						
40-4080-Black-FB		per millimeter			Black Anodize						

* The above profiles are sold per millimeter or stock length.

** Or comparable

Standard Machining Services

Service No.	Series	Service Description	Reference Page
40-7020	40	Cut to Length	859
40-7050	40	Access Hole	863
40-7044	40	Anchor Counterbore	865
40-7048	40	Tap Profile End	862

40mm X 80mm Lite T-Slotted Profile - Two Adjacent Open T-Slots

40-4082-Lite Profile

40-4082-Lite is a 40mm x 80mm lite metric 40 series rectangular T-slot profile with two adjacent open T-slots, two on one 80mm face. The profile is smooth, which makes it resistant to dirt and debris buildup while also being easy to clean. The 40-4082-Lite profile is compatible with 40 series fasteners. The three closed faces on this profile provide a clean, aesthetic look while the center cavity of the profile can be pressurized up to 1.034 N/mm^2 (150 psi), lending itself to work spaces, machine guards, displays and panel mount racks.

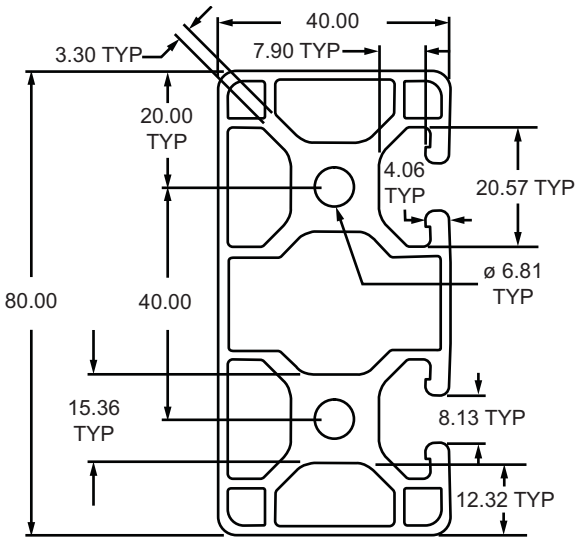

Part No.	Series	Stock Length	Material	Alloy**	Finish	Drop Lock	Moment of Inertia	Surface Area	Yield Strength	Modulus of Elasticity	Weight
40-4082-Lite *	40	4 or 6 Meter	Aluminum	6105-T5	Clear Anodize	2°	IX = 66.4788 cm^4 IY = 16.3044 cm^4	10.982 cm^2	241.1 N / mm^2	70,326.5 N / mm^2	2.9689 kg / m
40-4082-Lite-Black-FB		per millimeter			Black Anodize						

* The above profiles are sold per millimeter or stock length.
** Or comparable

Standard Machining Services

Service No.	Series	Service Description	Reference Page
40-7020	40	Cut to Length	859
40-7050	40	Access Hole	863
40-7044	40	Anchor Counterbore	865
40-7048	40	Tap Profile End	862

40mm X 80mm Lite T-Slotted Profile - Three Adjacent Open T-Slots

40-4083-Lite Profile

40-4083-Lite is a 40mm x 80mm lite metric 40 series rectangular T-slot profile with three adjacent open T-slots, two on one 80mm face and one on one 40mm face. The profile is smooth, which makes it resistant to dirt and debris buildup while also being easy to clean. The 40-4083-Lite profile is compatible with 40 series fasteners. The two closed faces on this profile provide a clean, aesthetic look while the center cavity of the profile can be pressurized up to 1.034 N/mm² (150 psi), lending itself to work spaces, machine guards and displays.

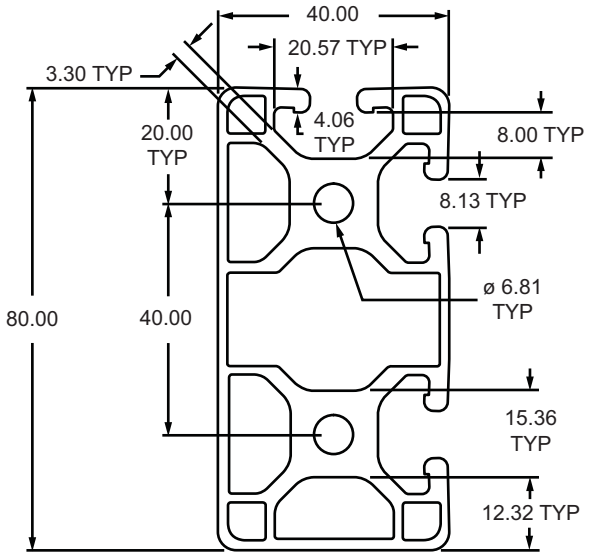

Part No.	Series	Stock Length	Material	Alloy**	Finish	Drop Lock	Moment of Inertia	Surface Area	Yield Strength	Modulus of Elasticity	Weight
40-4083-Lite *	40	4 or 6 Meter	Aluminum	6105-T5	Clear Anodize	2°	IX = 68.1908 cm⁴ IY = 16.4684 cm⁴	11.074 cm²	241.1 N / mm²	70,326.5 N / mm²	2.9957 kg / m
40-4083-Lite-Black-FB		per millimeter			Black Anodize						

* The above profiles are sold per millimeter or stock length.

** Or comparable

Standard Machining Services

Service No.	Series	Service Description	Reference Page
40-7020	40	Cut to Length	859
40-7050	40	Access Hole	863
40-7044	40	Anchor Counterbore	865
40-7048	40	Tap Profile End	862

40mm X 80mm Lite T-Slotted Profile - Four Adjacent Open T-Slots

40-4084-Lite Profile

40-4084-Lite is a 40mm x 80mm lite metric 40 series rectangular T-slot profile with four adjacent open T-slots, two on one 80mm face and one on each 40mm face. The profile is smooth, which makes it resistant to dirt and debris buildup while also being easy to clean. The 40-4084-Lite profile is compatible with 40 series fasteners. The closed face on this profile provides a clean, aesthetic look while the center cavity of the profile can be pressurized up to 1.034 N/mm^2 (150 psi), lending itself to work spaces, machine guards and displays.

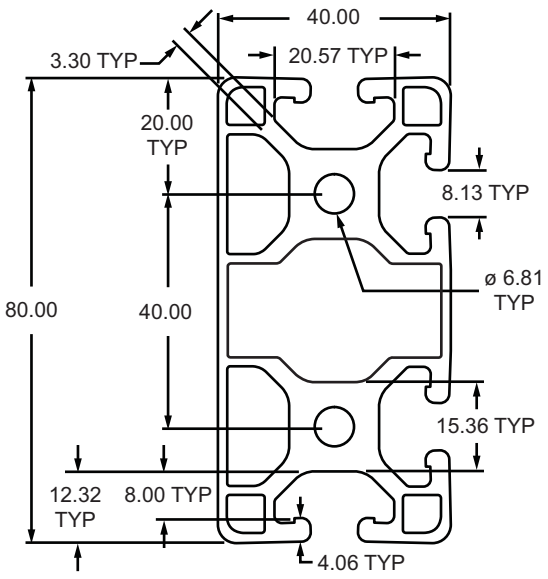

Part No.	Series	Stock Length	Material	Alloy**	Finish	Drop Lock	Moment of Inertia	Surface Area	Yield Strength	Modulus of Elasticity	Weight
40-4084-Lite *	40	4 or 6 Meter	Aluminum	6105-T5	Clear Anodize	2°	IX = 69.7265 cm^4 IY = 16.6107 cm^4	11.174 cm^2	241.1 N / mm^2	70,326.5 N / mm^2	3.0208 kg / m
40-4084-Lite-Black *		4 Meter			Black Anodize						
40-4084-Lite-Black-FB		per millimeter			Black Anodize						

* The above profiles are sold per millimeter or stock length.

** Or comparable

Standard Machining Services

Service No.	Series	Service Description	Reference Page
40-7020	40	Cut to Length	859
40-7050	40	Access Hole	863
40-7044	40	Anchor Counterbore	865
40-7048	40	Tap Profile End	862

40mm X 80mm Lite T-Slotted Profile - Two Opposite Open T-Slots

40-4085-Lite Profile

40-4085-Lite is a 40mm x 80mm lite metric 40 series rectangular T-slot profile with two open T-slots, one on each 40mm face. The profile is smooth, which makes it resistant to dirt and debris buildup while also being easy to clean. The 40-4085-Lite profile is compatible with 40 series fasteners. The closed faces on this profile provides a clean, aesthetic look while the center cavity of the profile can be pressurized up to 1.034 N/mm^2 (150 psi), lending itself to machine guards, enclosures, work benches, or displays.

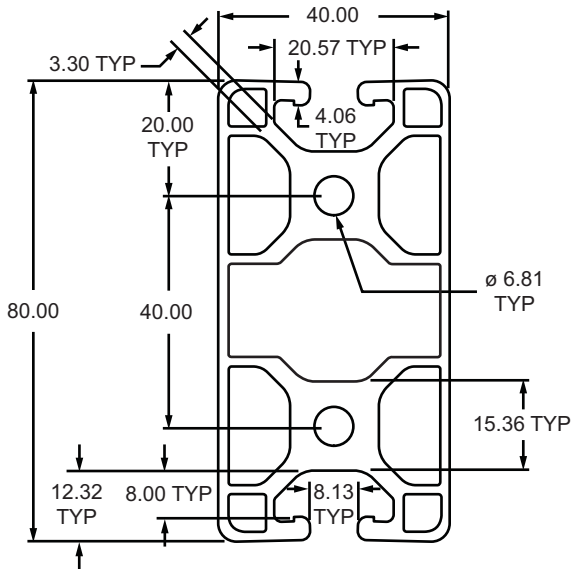

Part No.	Series	Stock Length	Material	Alloy**	Finish	Drop Lock	Moment of Inertia	Surface Area	Yield Strength	Modulus of Elasticity	Weight
40-4085-Lite *	40	4 or 6 Meter per millimeter	Aluminum	6105-T5	Clear Anodize	2°	IX = 67.8369 cm^4 IY = 15.9404 cm^4	11.000 cm^2	241.1 N / mm^2	70,326.5 N / mm^2	2.9760 kg / m
40-4085-Lite-Black-FB					Black Anodize						

* The above profiles are sold per millimeter or stock length.
** Or comparable

Standard Machining Services

Service No.	Series	Service Description	Reference Page
40-7020	40	Cut to Length	859
40-7050	40	Access Hole	863
40-7044	40	Anchor Counterbore	865
40-7048	40	Tap Profile End	862

40mm X 120mm T-Slotted Profile - Eight Open T-Slots

40-4012 Profile

40-4012 is a 40mm x 120mm metric 40 series rectangular T-slot profile with eight open T-slots, three on each 120mm face and one on each 40mm face. The profile is smooth, which makes it resistant to dirt and debris buildup while also being easy to clean. The 40-4012 profile is compatible with 40 series fasteners and has center cavities that can be pressurized up to 1.034 N/mm² (150 psi). The eight open T-slots make this profile great for mounting accessories, flat plates and hinges. It lends itself to linear motion and machine frames.

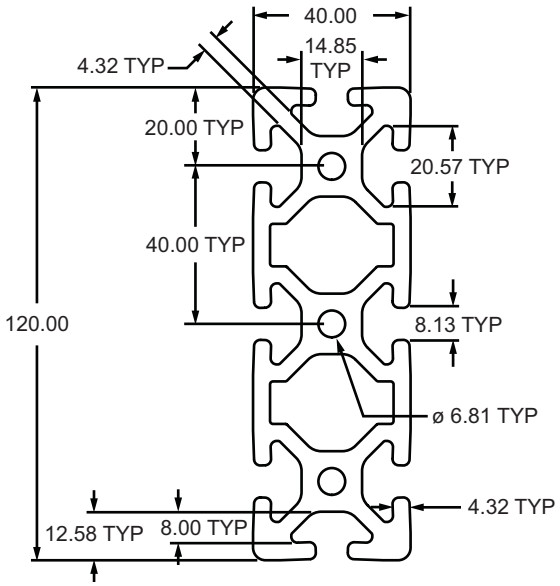

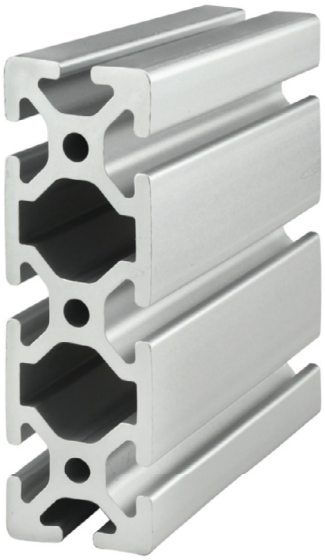

Part No.	Series	Stock Length	Material	Alloy**	Finish	Drop Lock	Moment of Inertia	Surface Area	Yield Strength	Modulus of Elasticity	Weight
40-4012 *	40	4 or 6 Meter	Aluminum	6105-T5	Clear Anodize	2°	IX = 306.3198 cm^4 IY = 36.8008 cm^4	21.927 cm^2	241.1 N / mm^2	70,326.5 N / mm^2	5.9306 kg / m
40-4012-Black-FB		per millimeter			Black Anodize						

* The above profiles are sold per millimeter or stock length.
** Or comparable

Standard Machining Services

Service No.	Series	Service Description	Reference Page
40-7021	40	Cut to Length	859
40-7050	40	Access Hole	863
40-7044	40	Anchor Counterbore	865
40-7028	40	Tap Profile End	862

40-8080 Profile

40-8080 is a 80mm x 80mm metric 40 series square T-slot profile with eight open T-slots, two on each 80mm face. The profile is smooth, which makes it resistant to dirt and debris buildup while also being easy to clean. The 40-8080 profile is compatible with 40 series fasteners and has a center cavity that can be pressurized up to 1.034 N/mm^2 (150 psi). The eight open T-slots, strength, and ability to pressurize this profile make it a great choice for automation applications, machine frames and workstations.

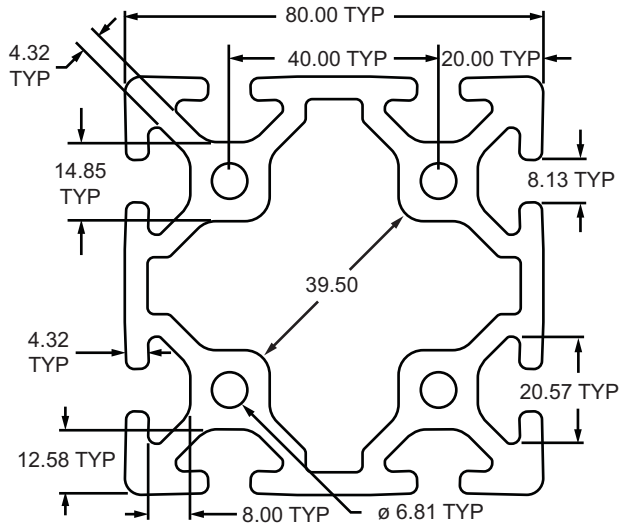

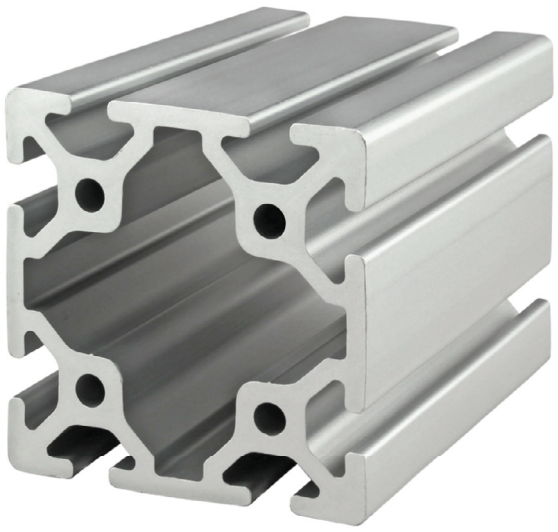

Part No.	Series	Stock Length	Material	Alloy**	Finish	Drop Lock	Moment of Inertia	Surface Area	Yield Strength	Modulus of Elasticity	Weight
40-8080 *	40	4 or 6 Meter	Aluminum	6105-T5	Clear Anodize	2°	IX = 171.6341 cm^4 IY = 171.6341 cm^4	23.573 cm^2	241.1 N / mm^2	70,326.5 N / mm^2	6.3762 kg / m
40-8080-Black *		4 Meter			Black Anodize						
40-8080-Black-FB		per millimeter			Black Anodize						

* The above profiles are sold per millimeter or stock length.

** Or comparable

Standard Machining Services

Service No.	Series	Service Description	Reference Page
40-7030	40	Cut to Length	859
40-7050	40	Access Hole	863
40-7044	40	Anchor Counterbore	865
40-7056	40	Tap Profile End	862

40-8016 Profile

40-8016 is a 80mm x 160mm metric 40 series rectangular T-slot profile with twelve open T-slots, two on each 80mm face and four on each 160mm face. The profile is smooth, which makes it resistant to dirt and debris buildup while also being easy to clean. The 40-8016 profile is compatible with 40 series fasteners, and has center cavities that can be pressurized up to 1.034 N/mm^2 (150 psi). The twelve open T-slots, strength, and ability to pressurize this profile make it a great choice for automation applications, machine frames and workstations.

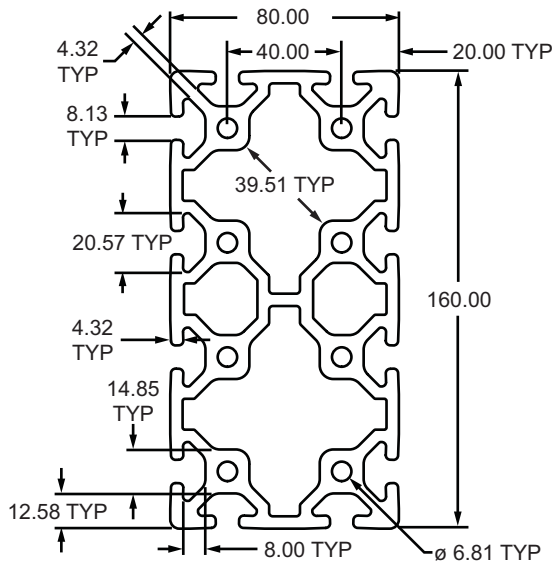

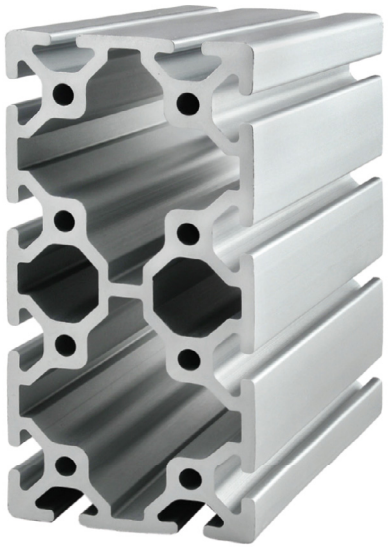

Part No.	Series	Stock Length	Material	Alloy**	Finish	Drop Lock	Moment of Inertia	Surface Area	Yield Strength	Modulus of Elasticity	Weight
40-8016 *	40	4 or 6 Meter	Aluminum	6105-T5	Clear Anodize	2°	IX = 1111.9793 cm^4 IY = 322.7985 cm^4	43.490 cm^2	241.1 N / mm^2	70,326.5 N / mm^2	11.7627 kg / m
40-8016-Black-FB		per millimeter			Black Anodize						

* The above profiles are sold per millimeter or stock length.

** Or comparable

Standard Machining Services

Service No.	Series	Service Description	Reference Page
40-7023	40	Cut to Length	859
40-7050	40	Access Hole	863
40-7044	40	Anchor Counterbore	865
40-7031	40	Tap Profile End	862

45mm X 45mm Lite T-Slotted Profile - Four Open T-Slots

45-4545-Lite Profile

45-4545-Lite is a 45mm x 45mm lite metric 45 series square T-slot profile with four open T-slots, one on each 45mm face. The profile is smooth, which makes it resistant to dirt and debris buildup while also being easy to clean. The 45-4545-Lite profile is compatible with all 45 series fasteners. This light profile lends itself to clean room applications, guards, enclosures, or workstations. The four open T-slots enable access from any direction and are useful for mounting accessories.

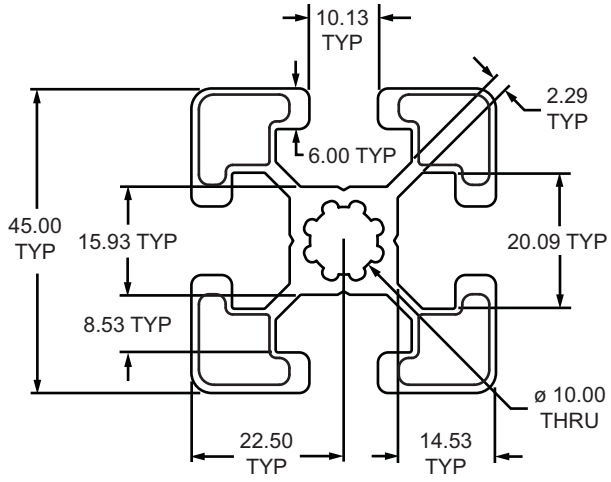

Part No.	Series	Stock Length	Material	Alloy**	Finish	Drop Lock	Moment of Inertia	Surface Area	Yield Strength	Modulus of Elasticity	Weight
45-4545-Lite *	45	4 or 6 Meter	Aluminum	6105-T5	Clear Anodize	None	IX = 9.2029 cm^4 IY = 9.2029 cm^4	5.167 cm^2	241.1 N / mm^2	70,326.5 N / mm^2	1.3976 kg / m
45-4545-Lite-Black-FB		per millimeter			Black Anodize						

* The above profiles are sold per millimeter or stock length.
** Or comparable

Standard Machining Services

Service No.	Series	Service Description	Reference Page
45-7010	45	Cut to Length	859
45-7248	45	Access Hole	863
45-7053	45	Tap Profile End	862
45-7037	45	Bolt Connector	880
45-7058	45	Central Connector	878

45-4545 Profile

45-4545 is a 45mm x 45mm metric 45 series square T-slot profile with four open T-slots, one on each 45mm face. The profile is smooth, which makes it resistant to dirt and debris buildup while also being easy to clean. The 45-4545 profile is compatible with all 45 series fasteners. This profile lends itself to clean room applications, guards, enclosures, or work stations. The four open T-slots enable access from any direction and are useful for mounting accessories.

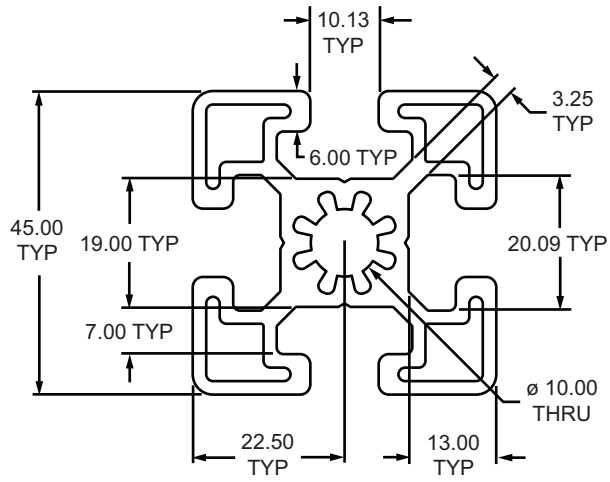

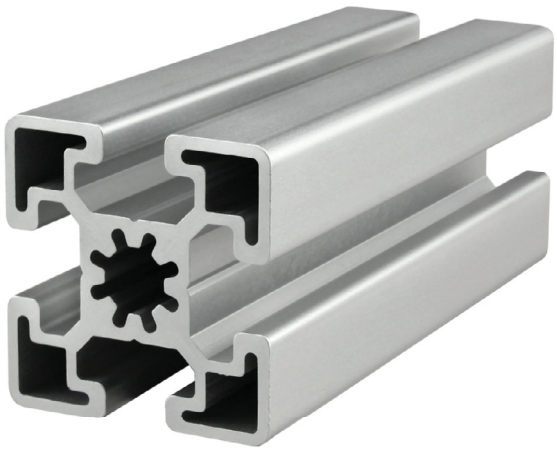

Part No.	Series	Stock Length	Material	Alloy**	Finish	Drop Lock	Moment of Inertia	Surface Area	Yield Strength	Modulus of Elasticity	Weight
45-4545 *	45	4 or 6 Meter	Aluminum	6105-T5	Clear Anodize	None	IX = 13.9604 cm^4 IY = 13.9604 cm^4	7.587 cm^2	241.1 N / mm^2	70,326.5 N / mm^2	2.0455 kg / m
45-4545-Black-FB		per millimeter			Black Anodize						

* The above profiles are sold per millimeter or stock length.

** Or comparable

Standard Machining Services

Service No.	Series	Service Description	Reference Page
45-7010	45	Cut to Length	859
45-7248	45	Access Hole	863
45-7053	45	Tap Profile End	862
45-7037	45	Bolt Connector	880
45-7058	45	Central Connector	878

45-4590 Profile

45-4590 is a 45mm x 90mm metric 45 series rectangular T-slot profile with six open T-slots, two on each 90mm face and one on each 45mm face. The profile is smooth, which makes it resistant to dirt and debris buildup while also being easy to clean. The 45-4590 profile is compatible with 45 series fasteners. This profile lends itself to work spaces, machine guards, and displays. The six open T-slots enable access from any direction and are useful for mounting accessories.

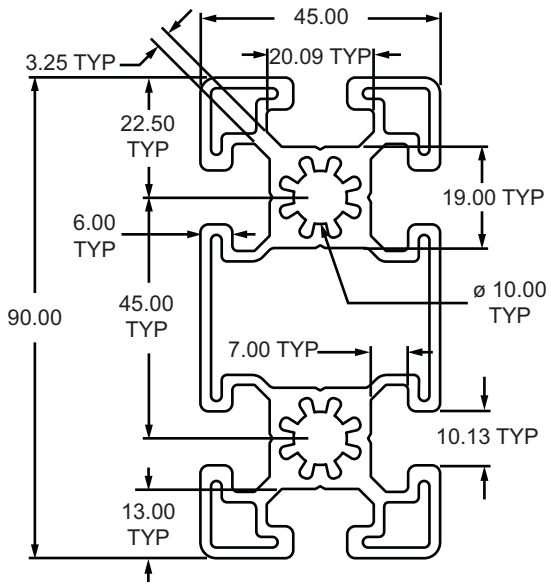

Part No.	Series	Stock Length	Material	Alloy**	Finish	Drop Lock	Moment of Inertia	Surface Area	Yield Strength	Modulus of Elasticity	Weight
45-4590 *	45	4 or 6 Meter	Aluminum	6105-T5	Clear Anodize	None	IX = 104.2072 cm^4 IY = 25.2637 cm^4	12.615 cm^2	241.1 N / mm^2	70,326.5 N / mm^2	3.4109 kg / m
45-4590-Black-FB		per millimeter			Black Anodize						

* The above profiles are sold per millimeter or stock length.

** Or comparable

Standard Machining Services

Service No.	Series	Service Description	Reference Page
45-7020	45	Cut to Length	859
45-7248	45	Access Hole	863
45-7032	45	Tap Profile End	862
45-7037	45	Bolt Connector	880

45-9090 Profile

45-9090 is a 90mm x 90mm metric 45 series square T-slot profile with eight open T-slots, two on each 90mm face. The profile is smooth, which makes it resistant to dirt and debris buildup while also being easy to clean. The 45-9090 profile is compatible with 45 series fasteners. The eight open T-slots and strength make it a great choice for automation applications, machine frames and workstations.

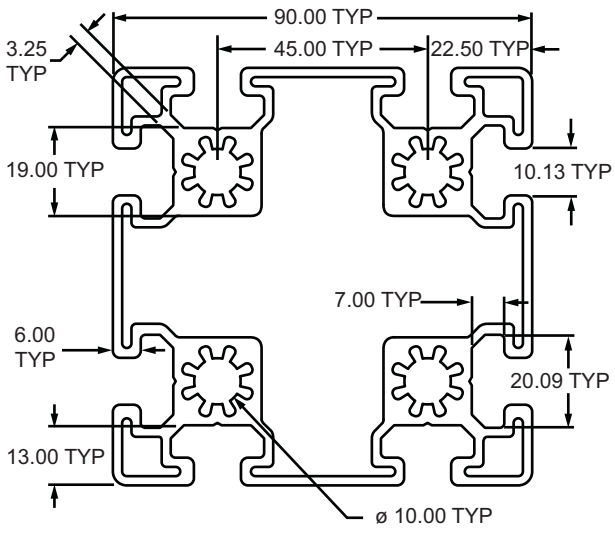

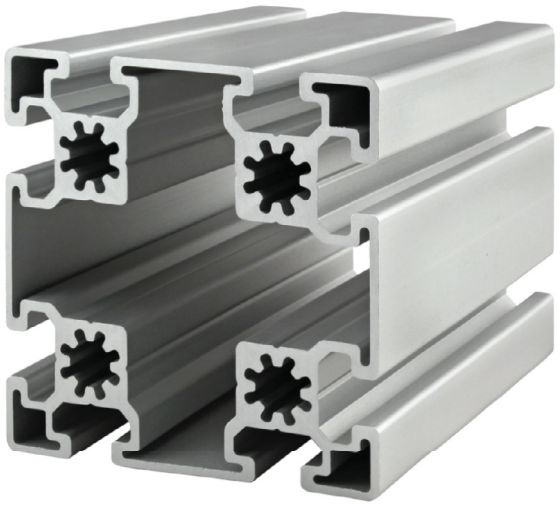

Part No.	Series	Stock Length	Material	Alloy**	Finish	Drop Lock	Moment of Inertia	Surface Area	Yield Strength	Modulus of Elasticity	Weight
45-9090 *	45	4 or 6 Meter	Aluminum	6105-T5	Clear Anodize	None	IX = 178.4968 cm^4 IY = 179.4968 cm^4	20.014 cm^2	241.1 N / mm^2	70,326.5 N / mm^2	5.4116 kg / m
45-9090-Black-FB		per millimeter			Black Anodize						

* The above profiles are sold per millimeter or stock length.

** Or comparable

Standard Machining Services

Service No.	Series	Service Description	Reference Page
45-7030	45	Cut to Length	859
45-7036	45	Tap Profile End	862
45-7037	45	Bolt Connector	880

1.50” X 1.50” Square Tube Profile - No Pre-Drilled Holes

9700 Profile

9700 is a 1.50” x 1.50” square Ready Tube profile with no pre-drilled holes. This profile lends itself to applications where you need an aesthetic look and clean, smooth surface such as framing, displays, trade show booths or retail kiosks.

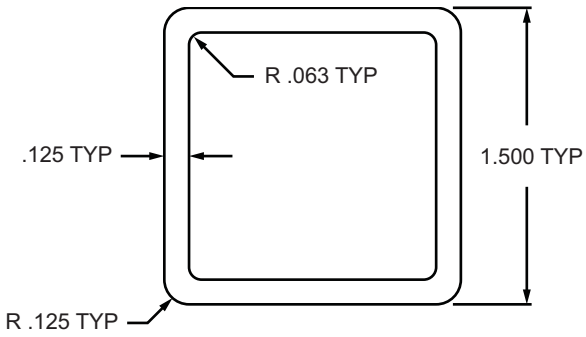

Part No.	Series	Stock Length	Material	Alloy**	Finish	Moment of Inertia	Surface Area	Yield Strength	Modulus of Elasticity	Weight
9700 *	RT	100” or 150”	Aluminum	6105-T5	Clear Anodize	IX = 0.2127”4 IY = 0.2127”4	0.6775 in.^{2}	35,000 psi	10,200,000 lb / in.^{2}	0.0660 lb / in.
9700-Black-FB		per inch			Black Anodize					

* The above profiles are sold per inch or stock length.
** Or comparable

Standard Machining Services

Service No.	Series	Service Description	Reference Page
7010	RT	Cut to Length	860
7246	RT	Access Hole	863

9701 Profile

9701 is a 1.50” x 1.50” square Ready Tube profile with pre-drilled holes at 1.50” intervals along each face. The pre-drilled holes in this profile lend it to applications such as gravity racks, conveyor tables and material handling shelves.

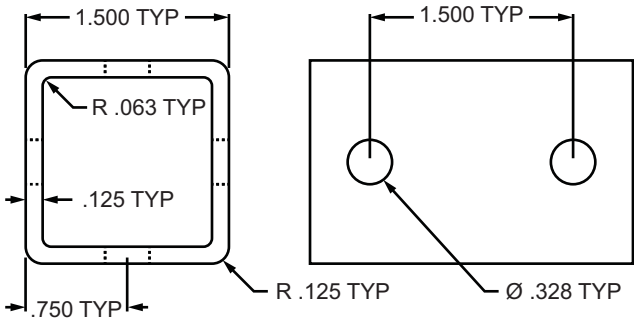

Part No.	Series	Stock Length	Material	Alloy**	Finish	Moment of Inertia	Surface Area	Yield Strength	Modulus of Elasticity	Weight
9701 *	RT	100” or 150”	Aluminum	6105-T5	Clear Anodize	—	0.6775 in.^{2}	35,000 psi	10,200,000 lb / in.^{2}	0.0660 lb / in.
9701-Black-FB		per inch			Black Anodize					

* The above profiles are sold per inch or stock length.

** Or comparable

Standard Machining Services

Service No.	Series	Service Description	Reference Page
7010	RT	Cut to Length	860
7246	RT	Access Hole	863

1.50” X 1.50” P-Tube Profile - No Pre-Drilled Holes - Single 1.50” Flange on One Side

9705 Profile

9705 is a 1.50” x 1.50” P-shaped Ready Tube profile with no pre-drilled holes and a single 1.50” flange on one side. This profile lends itself to applications where you need an aesthetic look and clean, smooth surface such as framing, displays, trade show booths or retail kiosks.

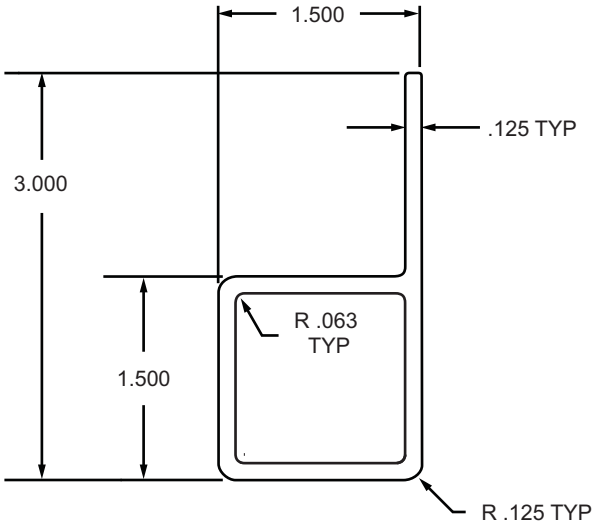

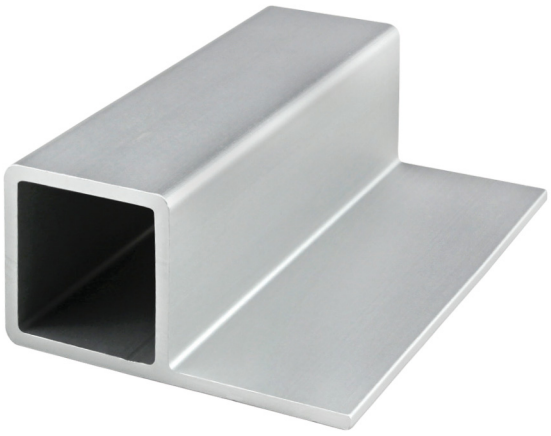

Part No.	Series	Stock Length	Material	Alloy**	Finish	Moment of Inertia	Surface Area	Yield Strength	Modulus of Elasticity	Weight
9705 *	RT	100” or 150”	Aluminum	6105-T5	Clear Anodize	—	0.8691 in.^{2}	35,000 psi	10,200,000 lb / in.^{2}	0.1033 lb / in.
9705-Black-FB		per inch			Black Anodize					

* The above profiles are sold per inch or stock length.

** Or comparable

Standard Machining Services

Service No.	Series	Service Description	Reference Page
7020	RT	Cut to Length	860
7246	RT	Access Hole	863

1.50” X 1.50” P-Tube Profile - Pre-Drilled Holes - Single 1.50” Flange on One Side

9706 Profile

9706 is a 1.50” x 1.50” P-shaped Ready Tube profile with pre-drilled holes at 1.50” intervals and a single 1.50” flange on one side. The pre-drilled holes in this profile lend it to applications such as gravity racks, conveyor tables and material handling shelves.

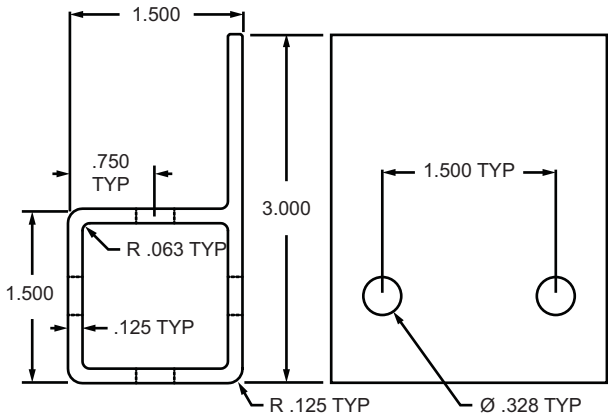

Part No.	Series	Stock Length	Material	Alloy**	Finish	Moment of Inertia	Surface Area	Yield Strength	Modulus of Elasticity	Weight
9706 *	RT	100” or 150”	Aluminum	6105-T5	Clear Anodize	—	0.8691 in.^{2}	35,000 psi	10,200,000 lb / in.^{2}	0.0848 lb / in.
9706-Black-FB		per inch			Black Anodize					

* The above profiles are sold per inch or stock length.

** Or comparable

Standard Machining Services

Service No.	Series	Service Description	Reference Page
7020	RT	Cut to Length	860
7246	RT	Access Hole	863

1.50” X 1.50” A-Tube Profile - No Pre-Drilled Holes - Double 1.50” Flange on One Side

9725 Profile

9725 is a 1.50” x 1.50” A-shaped Ready Tube profile with a double 1.50” flange on one side and no pre-drilled holes. This profile lends itself to applications where you need an aesthetic appearance and clean, smooth surface such as framing, displays, material handling and do-it-yourself projects.

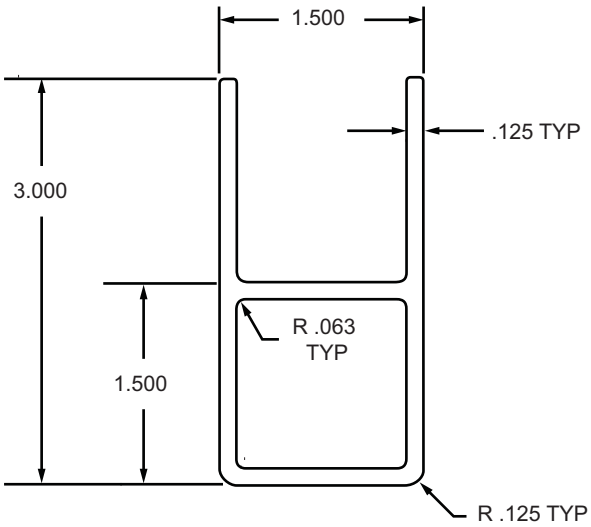

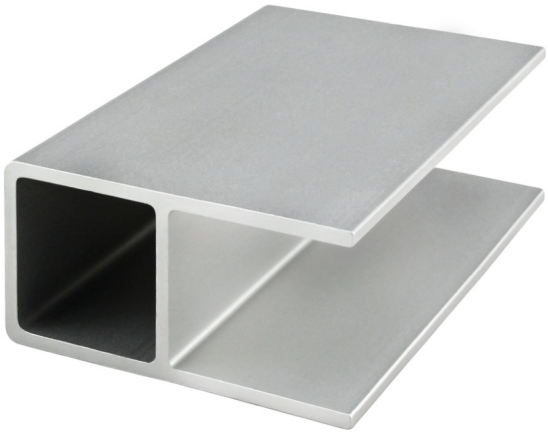

Part No.	Series	Stock Length	Material	Alloy**	Finish	Moment of Inertia	Surface Area	Yield Strength	Modulus of Elasticity	Weight
9725 *	RT	100” or 150”	Aluminum	6105-T5	Clear Anodize	—	1.061 $in.^2$	35,000 psi	10,200,000 $lb / in.^2$	0.1033 lb / in.
9725-Black-FB		per inch			Black Anodize					

* The above profiles are sold per inch or stock length.

** Or comparable

Standard Machining Services

Service No.	Series	Service Description	Reference Page
7020	RT	Cut to Length	860
7246	RT	Access Hole	863

1.50” X 1.50” A-Tube Profile - Pre-Drilled Holes - Double 1.50” Flange on One Side

9726 Profile

9726 is a 1.50” x 1.50” A-shaped Ready Tube profile with a double 1.50” flange and pre-drilled holes at 1.50” intervals. The pre-drilled holes in this profile lend it to applications such as gravity racks, conveyor tables and material handling shelves.

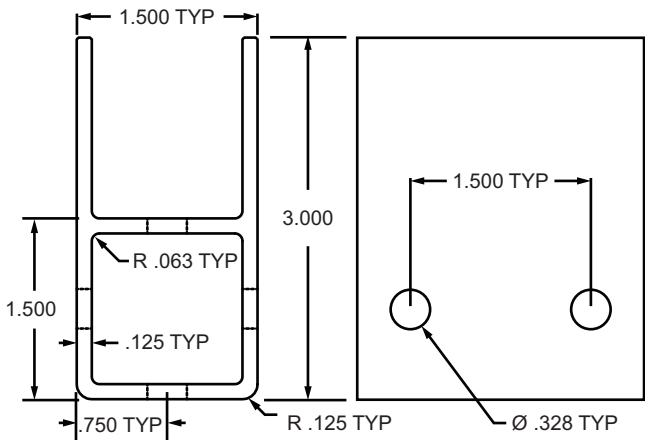

Part No.	Series	Stock Length	Material	Alloy**	Finish	Moment of Inertia	Surface Area	Yield Strength	Modulus of Elasticity	Weight
9726 *	RT	100” or 150”	Aluminum	6105-T5	Clear Anodize	—	1.061 in.^{2}	35,000 psi	10,200,000 lb / in.^{2}	0.1033 lb / in.
9726-Black-FB		per inch			Black Anodize					

* The above profiles are sold per inch or stock length.
** Or comparable

Standard Machining Services

Service No.	Series	Service Description	Reference Page
7020	RT	Cut to Length	860
7246	RT	Access Hole	863

1.50” X 1.50” A-Tube Profile - Pre-Drilled Holes - Notches - Double 1.50” Flange on One Side

9728 Profile

9728 is a 1.50” x 1.50” A-shaped Ready Tube profile with two 1.50” adjacent flanges. Both flanges are notched and the tube has pre-drilled holes on 1.50” centerlines. The notches in this profile make it perfect for applications such as gravity racks, conveyor tables and material handling shelves.

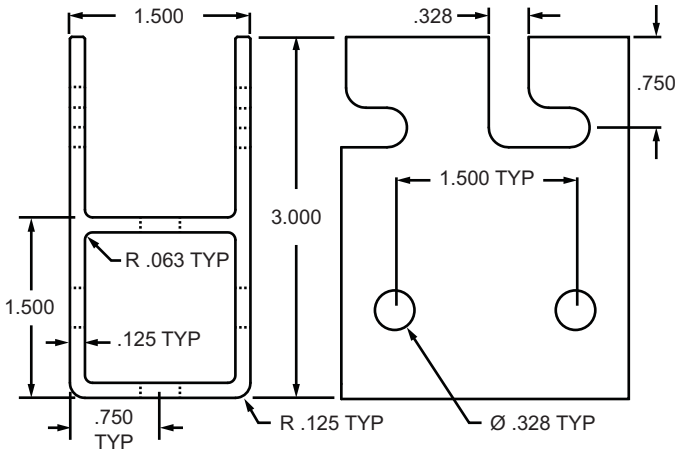

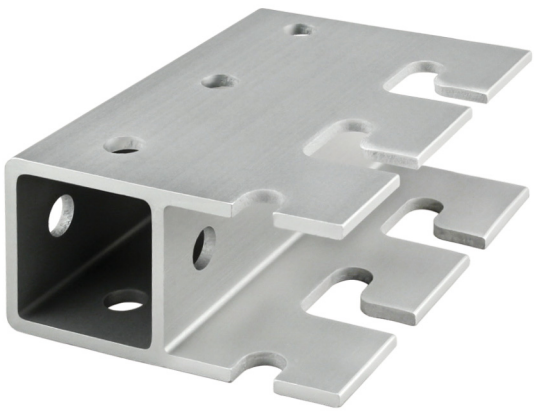

Part No.	Series	Stock Length	Material	Alloy**	Finish	Moment of Inertia	Surface Area	Yield Strength	Modulus of Elasticity	Weight
9728 *	RT	100” or 150”	Aluminum	6105-T5	Clear Anodize	—	1.061 in.^{2}	35,000 psi	10,200,000 lb / in.^{2}	0.1033 lb / in.
9728-Black-FB		per inch			Black Anodize					

* The above profiles are sold per inch or stock length.

** Or comparable

Standard Machining Services

Service No.	Series	Service Description	Reference Page
7020	RT	Cut to Length	860
7246	RT	Access Hole	863

9000 Profile

9000 is a 1.00” x 1.00” square Quick Frame profile with a grooved interior used to hold nylon connectors into place. The profile has a smooth surface for a sleek appearance and allows for easy cleaning, lending itself to applications such as framing, displays, or retail kiosks.

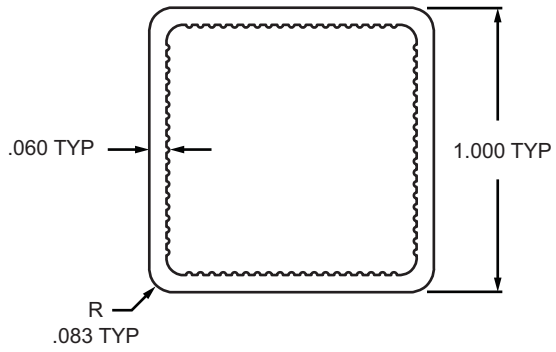

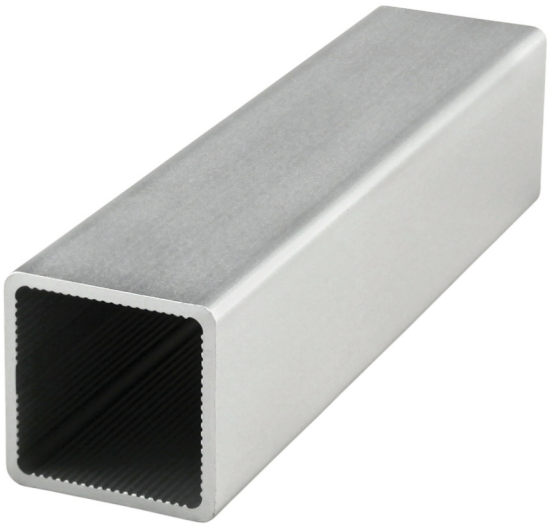

Part No.	Series	Stock Length	Material	Alloy**	Finish	Moment of Inertia	Surface Area	Yield Strength	Modulus of Elasticity	Weight
9000 *	QF	145”	Aluminum	6105-T5	Clear Anodize	—	.2228 in.^{2}	35,000 psi	10,200,000 lb / in.^{2}	0.0231 lb / in.
9000-Black-FB		per inch			Black Anodize					

* The above profiles are sold per inch or stock length.

** Or comparable

Standard Machining Services

Service No.	Series	Service Description	Reference Page
7310	QF	Cut to Length	860

1.00” X 1.00” Tube Profile - Single 0.5” Flange on One Side

9005 Profile

9005 is a 1.00” x 1.00” Quick Frame profile with a single 0.5” flange on one side and a grooved interior used to hold nylon connectors into place. The profile has a smooth surface for a sleek appearance and allows for easy cleaning, lending itself to applications such as framing, displays, or retail kiosks.

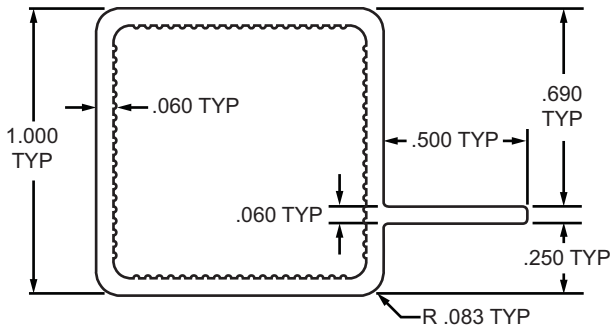

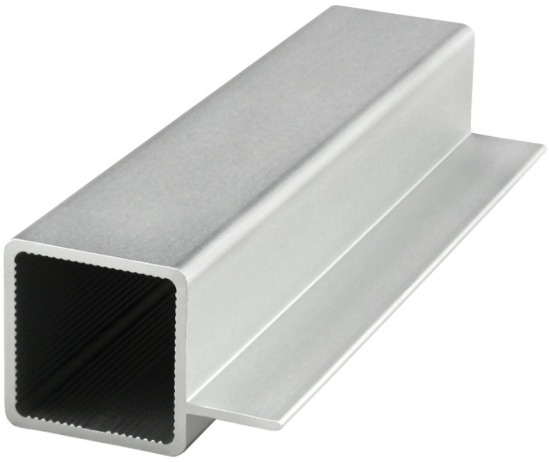

Part No.	Series	Stock Length	Material	Alloy**	Finish	Moment of Inertia	Surface Area	Yield Strength	Modulus of Elasticity	Weight
9005 *	QF	145”	Aluminum	6105-T5	Clear Anodize	—	.2528 in.^{2}	35,000 psi	10,200,000 lb / in.^{2}	0.0261 lb / in.
9005-Black-FB		per inch			Black Anodize					

* The above profiles are sold per inch or stock length.

** Or comparable

Standard Machining Services

Service No.	Series	Service Description	Reference Page
7310	QF	Cut to Length	860
7300	QF	45º Flange Milling	883

9010 Profile

9010 is a 1.00” x 1.00” Quick Frame profile with two single 0.5” flanges on adjacent sides, and a grooved interior used to hold nylon connectors into place. The profile has a smooth surface for a sleek appearance, allows for easy cleaning and holds paneling in place, lending itself to applications such as framing, displays, or retail kiosks.

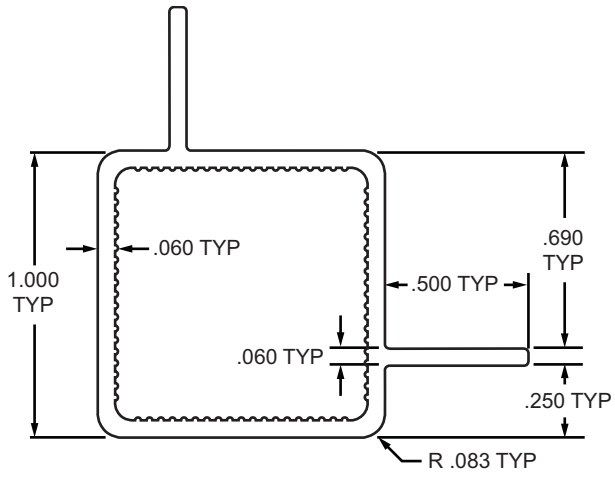

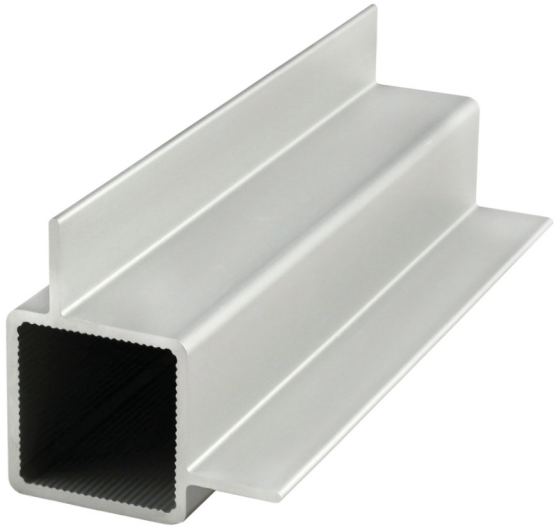

Part No.	Series	Stock Length	Material	Alloy**	Finish	Moment of Inertia	Surface Area	Yield Strength	Modulus of Elasticity	Weight
9010 *	QF	145”	Aluminum	6105-T5	Clear Anodize	—	.2828 in.^{2}	35,000 psi	10,200,000 lb / in.^{2}	0.0291 lb / in.
9010-Black-FB		per inch			Black Anodize					

* The above profiles are sold per inch or stock length.
** Or comparable

Standard Machining Services

Service No.	Series	Service Description	Reference Page
7310	QF	Cut to Length	860
7301	QF	45º Flange Milling	883

1.00” X 1.00” Tube Profile - Single 0.5” Flanges on Opposite Sides

9015 Profile

9015 is a 1.00” x 1.00” Quick Frame profile with two single 0.5” flanges on opposite sides, and a grooved interior used to hold nylon connectors into place. The profile has a smooth surface for a sleek appearance, allows for easy cleaning and holds paneling in place, lending itself to applications such as framing, displays, or retail kiosks.

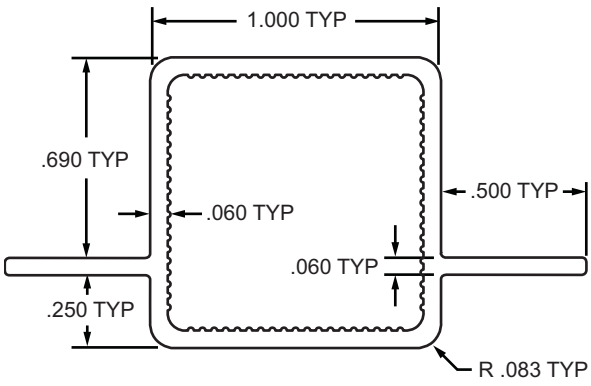

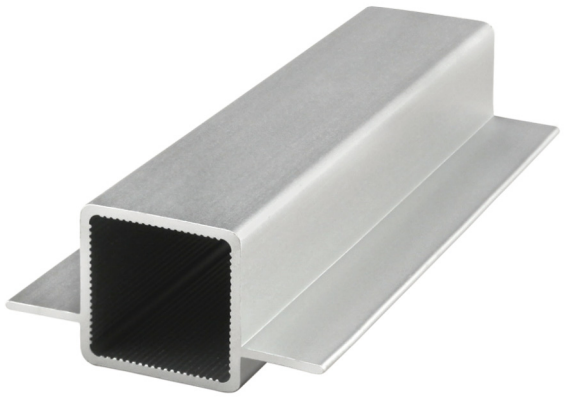

Part No.	Series	Stock Length	Material	Alloy**	Finish	Moment of Inertia	Surface Area	Yield Strength	Modulus of Elasticity	Weight
9015 *	QF	145”	Aluminum	6105-T5	Clear Anodize	—	.2828 in.^{2}	35,000 psi	10,200,000 lb / in.^{2}	0.0291 lb / in.
9015-Black-FB		per inch			Black Anodize					

* The above profiles are sold per inch or stock length.

** Or comparable

Standard Machining Services

Service No.	Series	Service Description	Reference Page
7310	QF	Cut to Length	860
7302	QF	45º Flange Milling	883

9025 Profile

9025 is a 1.00” x 1.00” Quick Frame profile with right angle double 0.5” twin flanges and a grooved interior used to hold nylon connectors into place. The profile has a smooth surface for a sleek appearance and allows for easy cleaning. The positioning of the twin flanges makes the profile perfect for light-weight applications requiring paneling such as enclosures, guarding, storage, and shelving solutions.

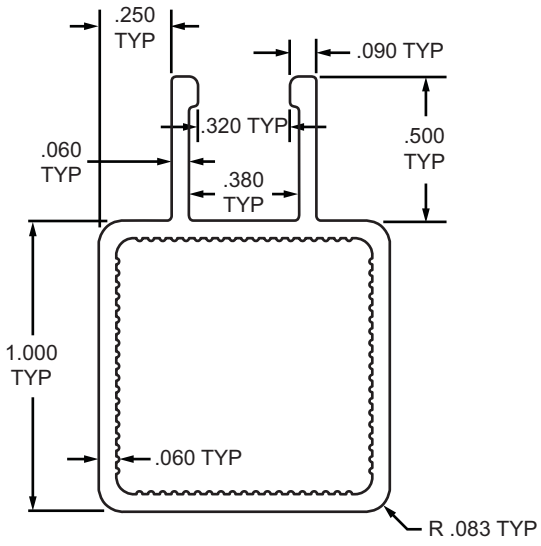

Part No.	Series	Stock Length	Material	Alloy**	Finish	Moment of Inertia	Surface Area	Yield Strength	Modulus of Elasticity	Weight
9025 *	QF	145”	Aluminum	6105-T5	Clear Anodize	—	.2889 in.^{2}	35,000 psi	10,200,000 lb / in.^{2}	0.0296 lb / in.
9025-Black-FB		per inch			Black Anodize					

* The above profiles are sold per inch or stock length.
** Or comparable

Standard Machining Services

Service No.	Series	Service Description	Reference Page
7310	QF	Cut to Length	860
7300	QF	45º Flange Milling	883

1.00” X 1.00” Tube Profile - Double 0.5” Flanges on Adjacent Sides

9030 Profile

9030 is a 1.00” x 1.00” Quick Frame profile with right angle double 0.5” twin flanges. The profile has a smooth surface for a sleek appearance and allows for easy cleaning. The positioning of the twin flanges makes the profile perfect for light-weight applications requiring paneling such as enclosures, guarding, storage, and shelving solutions.

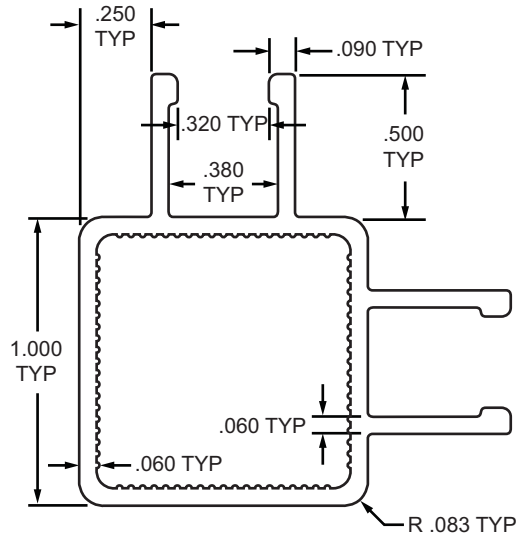

Part No.	Series	Stock Length	Material	Alloy**	Finish	Moment of Inertia	Surface Area	Yield Strength	Modulus of Elasticity	Weight
9030 *	QF	145”	Aluminum	6105-T5	Clear Anodize	—	.3550 in.^{2}	35,000 psi	10,200,000 lb / in.^{2}	0.0362 lb / in.
9030-Black-FB		per inch			Black Anodize					

* The above profiles are sold per inch or stock length.
** Or comparable

Standard Machining Services

Service No.	Series	Service Description	Reference Page
7310	QF	Cut to Length	860
7301	QF	45º Flange Milling	883

1.00” X 1.00” Tube Profile - Double 0.5” Flanges on Opposite Sides

9035 Profile

9035 is a 1.00” x 1.00” Quick Frame profile with 0.5” double twin flanges on opposite sides and a grooved interior used to hold nylon connectors into place. The profile has a smooth surface for a sleek appearance and allows for easy cleaning. The positioning of the twin flanges makes the profile perfect for light-weight applications requiring paneling such as enclosures, guarding, storage, and shelving solutions.

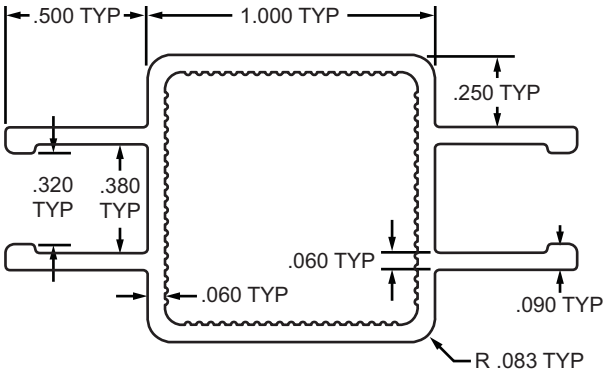

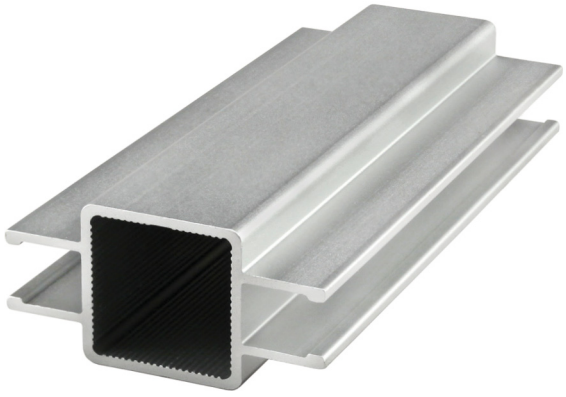

Part No.	Series	Stock Length	Material	Alloy**	Finish	Moment of Inertia	Surface Area	Yield Strength	Modulus of Elasticity	Weight
9035 *	QF	145”	Aluminum	6105-T5	Clear Anodize	—	.3550 in.^{2}	35,000 psi	10,200,000 lb / in.^{2}	0.0362 lb / in.
9035-Black-FB		per inch			Black Anodize					

* The above profiles are sold per inch or stock length.

** Or comparable

Standard Machining Services

Service No.	Series	Service Description	Reference Page
7310	QF	Cut to Length	860
7302	QF	45º Flange Milling	883

Look Close:
80/20 Products Are Everywhere

You'll find that once you start looking around you'll see 80/20 products everywhere! From machine guards to displays, 80/20 is a product for individuals, industries and businesses alike.

- Automation
- Pneumatics
- Industrial Manufacturing
- Molding & Plastics
- Healthcare
- Automotive
- Arts & Entertainment
- Architecture
- Robotics
- Research & Development
- Universities
- Retail

Pictorial Table Of Contents

Introduction to Fastening Methods

Page 206

Fastening Method Types
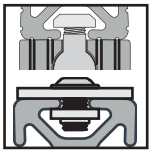
Page 207

Get to Know Your Hardware

Page 208

T-Nut Types

Page 209

Hardware Options

Page 210

Ready Tube Connectors

Page 211

Quick Frame Connectors
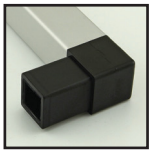
Page 212

Internal Fastening Methods

Standard Anchor Fastener

Page 213

Standard Anchor Fastener Cam

Page 214

Short Double Anchor Fastener

Page 215

Long Double Anchor Fastener

Page 216

Butt Fastener

Page 217

Standard End Fastener

Page 218

Single Tab End Fastener

Page 219

Double End Fastener

Page 220

Hidden Corner Connector

Page 221

Miter Connector

Page 222

90 Degree Inside Corner Connector

Page 223

Central Connector

Page 224

Bolt Connector

Page 225

Milling Connector

Page 226

External Fastening Methods

Plate Connector

Page 227

45 Degree Support Connector

Page 228

45 Degree Supports

Page 229

2 Hole Straight Flat Plate

Page 235

3 Hole Straight Flat Plate

Page 236

4 Hole Straight Flat Plate

Page 237

4 Hole Square Flat Plate

Page 238

6 Hole Rectangular Flat Plate

Page 239

8 Hole Rectangular Flat Plate

Page 240

2 Hole Straight Transition Plate

Page 241

2 Hole Straight Transition Plate with Flush Offset

Page 242

2 Hole Slotted Transition Plate with Flush Offset

Page 243

3 Hole Straight Transition Plate Small Series Primary

Page 244

3 Hole Straight Transition Plate Large Series Primary

Page 245

CONTINUE

Pictorial Table Of Contents

4 Hole Straight Transition Plates

Page 246

4 Hole Rectangular Transition Plates

Page 247

4 Hole Rectangular Transition Plates with Flush Offset

Page 248

4 Hole Rectangular Slotted Transition Plates w/ Flush Offset

Page 249

6 Hole Rectangular Transition Plates Small Series Primary

Page 250

6 Hole Rectangular Transition Plates Large Series Primary

Page 251

8 Hole Rectangular Transition Plates

Page 252

4 Hole 90 Degree Angled Flat Plates

Page 253

5 Hole 90 Degree Angled Flat Plates

Page 254

6 Hole 90 Degree Angled Stacked Flat Plates

Page 255

6 Hole 90 Degree Angled Squared Flat Plates

Page 256

7 Hole 90 Degree Angled Squared Flat Plates

Page 257

7 Hole 90 Degree Angled Stacked Flat Plates

Page 258

9 Hole 90 Degree Angled Flat Plates

Page 259

10 Hole 90 Degree Angled Flat Plates

Page 260

12 Hole 90 Degree Angled Flat Plates

Page 261

4 Hole 15 Degree Angled Flat Plates

Page 262

6 Hole 15 Degree Angled Flat Plates

Page 263

4 Hole 30 Degree Angeled Flat Plates

Page 264

6 Hole 30 Degree Angled Flat Plates

Page 265

4 Hole 45 Degree Angled Flat Plates

Page 266

6 Hole 45 Degree Angled Flat Plates

Page 267

4 Hole 60 Degree Angled Flat Plates

Page 268

6 Hole 60 Degree Angled Flat Plates

Page 269

4 Hole Tee Flat Plate

Page 270

5 Hole Tee Flat Plate

Page 271

6 Hole Tee Flat Plate

Page 272

7 Hole Tee Flat Plate

Page 273

8 Hole Tee Flat Plate

Page 274

11 Hole Tee Flat Plate

Page 275

12 Hole Tee Flat Plate

Page 276

16 Hole Tee Flat Plate

Page 277

7 Hole Cross Flat Plate
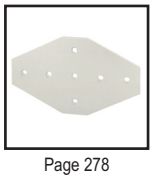
Page 278

12 Hole Cross Flat Plate
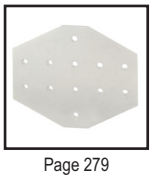
Page 279

16 Hole Cross Flat Plate

Page 280

CONTINUE

Pictorial Table Of Contents

20 Hole Cross Flat Plate

Page 281

5 Hole "L" Flat Plate

Page 282

5 Hole "T" Flat Plate

Page 283

2 Hole Lite Inside Corner Bracket

Page 284

2 Hole Inside Corner Bracket

Page 285

2 Hole Slotted Inside Corner Bracket

Page 286

2 Hole Inside Corner Bracket with Single Support

Page 287

2 Hole 18mm Slotted Bracket with Dual Support
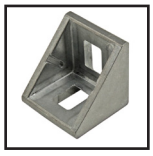
Page 288

2 Hole 20mm Slotted Bracket with Dual Support
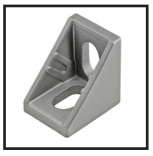
Page 289

2 Hole 27mm Slotted Bracket with Dual Supoort

Page 290

2 Hole 28mm Slotted Bracket with Dual Support
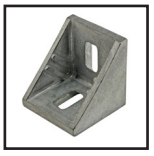
Page 291

2 Hole 39mm Slotted Bracket with Dual Support

Page 292

2 Hole 42mm Slotted Bracket with Dual Support
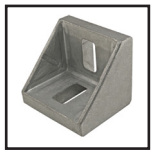
Page 293

3 Hole Inside Corner Bracket

Page 294

3 Hole Slotted Inside Corner Bracket

Page 295

4 Hole Wide Inside Corner Bracket

Page 296

4 Hole Tall Inside Corner Bracket

Page 297

4 Hole Inside Corner Bracket with Single Support

Page 298

4 Hole Inside Corner Bracket with Dual Support

Page 299

4 Hole Tall Lite Inside Corner Bracket

Page 300

4 Hole Wide Slotted Inside Corner Bracket

Page 301

6 Hole Tall Inside Corner Bracket

Page 302

6 Hole Wide 2x4 Corner Bracket

Page 303

6 Hole Wide 2x4 Slotted Bracket

Page 304

6 Hole Wide 3x3 Corner Bracket

Page 305

6 Hole Center Corner Bracket

Page 306

6 Hole Left Aligned Corner Bracket

Page 307

6 Hole Right Aligned Corner Bracket

Page 308

6 Hole Wide Slotted Inside Corner Bracket

Page 309

8 Hole Inside Corner Bracket

Page 310

8 Hole 57mm Bracket with Dual Support

Page 311

8 Hole 76mm Bracket with Dual Support

Page 312

8 Hole 86mm Bracket with Dual Support

Page 313

9 Hole Wide Slotted Inside Corner Bracket

Page 314

10 Hole Inside Corner Bracket

Page 315

CONTINUE

Pictorial Table Of Contents

12 Hole Tall Inside Corner Bracket

Page 316

12 Hole Wide Inside Corner Bracket

Page 317

18 Hole Inside Corner Bracket

Page 318

3 Way Triangular Corner Bracket

Page 319

3 Way Rounded Corner Bracket

Page 320

2 Hole Lite Transition Inside Corner Bracket

Page 321

2 Hole Transition Inside Corner Bracket

Page 322

4 Hole Tall Transition Inside Corner Bracket

Page 323

4 Hole Lite Wide Transition Inside Corner Bracket

Page 324

4 Hole Wide Transition Inside Corner Bracket

Page 325

8 Hole Center Transition Inside Corner Bracket

Page 326

2 Hole Gusseted Inside Corner Bracket
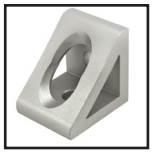
Page 327

4 Hole Tall Gusseted Inside Corner Bracket

Page 328

4 Hole Wide Gusseted Inside Corner Bracket
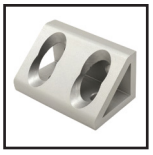
Page 329

8 Hole Gusseted Inside Corner Bracket

Page 330

3 Way Squared Corner Connector

Page 331

2 Way Light Squared Corner Connector

Page 332

3 Way Light Squared Corner Connector
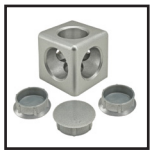
Page 333

3 Way Rounded Corner Connector

Page 334

3 Way Triangular Corner Connector
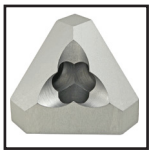
Page 335

Variable Angle Connectors

Standard Angle Clamp Block

Page 336

Economy Angle Clamp Block
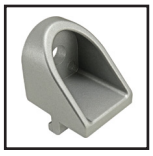
Page 337

2 Hole Pivot Joint

Page 338

3 Hole Triangular Pivot Plate

Page 340

3 Hole Recessed Straight Pivot Plate

Page 341

3 Hole Recessed Triangular Pivot Plate

Page 342

5 Hole Triangular Pivot Plate

Page 343

5 Hole Recessed Triangular Pivot Plate

Page 344

0 Degree Structural Pivot Nub

Page 345

90 Degree Structural Pivot Nub

Page 346

Universal Structural Pivot Nub

Page 347

0 Degree Structural Right Angle Pivot Nub

Page 348

90 Degree Structural Right Angle Pivot Nub

Page 349

Universal Structural Right Angle Pivot Nub

Page 350

CONTINUE

Pictorial Table Of Contents

"L" Structural Pivot Arm

Page 351

Standard Straight Structural Pivot Arm

Page 352

Extended Straight Structural Pivot Arm

Page 353

Standard Structural Pivot Assembly with Dual Straight Arms

Page 354

Standard Structural Pivot Assembly with Dual "L" Arms

Page 356

Standard Structural Pivot Assembly wiith Straight and "L" Arm

Page 358

Right Angle Structural Pivot Assembly with Dual Straight Arms

Page 360

Right Angle Structural Pivot Assembly with Dual "L" Arms

Page 362

Hardware

Slide-in Economy T-Nut Center Thread

Page 364

Slide-in Economy T-Nut Offset Thread

Page 365

Double Slide-in Economy T-Nut

Page 366

Triple Slide-in Economy T-Nut

Page 367

Standard Slide-in T-Nut

Page 368

Self-Aligning Slide-in T-Nut with Ball Spring

Page 370

Slide-in T-Nut with Ball Spring

Page 371

Self-Aligning Slide-in T-Nut

Page 372

Slide-in Economy T-Nut Block

Page 373

Roll-in T-Nut with Flex Handle

Page 374

Roll-in T-Nut with Set Screw

Page 375

Roll-in T-Nut with Ball Spring

Page 376

Self-Aligning Roll-in T-Nut with Ball Spring

Page 377

Self-Aligning Roll-in T-Nut

Page 378

Tall Self-Aligning Roll-in T-Nut with Spring Leaf

Page 379

Short Self-Aligning Roll-in T-Nut with Spring Leaf

Page 380

Economy Drop-in T-Nut

Page 381

Standard Drop-in T-Nut

Page 382

Slide-in T-Nut with Holding Spring

Page 384

Double Anchor Slide-in T-Nut

Page 385

Nylon T-Slot Nut

Page 386

CONTINUE

Pictorial Table Of Contents

Button Head Socket Cap Screw

Page 387

Flanged Button Head Socket Cap Screw

Page 389

Flat Head Socket Cap Screw

Page 390

Socket Head Cap Screw

Page 391

Low Head Socket Cap Screw

Page 395

Flanged Hex Head Bolt

Page 395

Connecting Screw

Page 396

Self Tapping Screw

Page 396

Self Drilling Screw

Page 396

Threaded Insert

Page 397

Bearing Pad Screw

Page 397

Shoulder Bolt

Page 398

Shoulder Bolt Assembly

Page 398

Washer

Page 399

Hex Nut

Page 400

Flanged Hex Head Nut

Page 401

Slide-in Flanged Economy T-Slot Stud

Page 402

Drop-in T-Slot Stud Assembly

Page 403

Drop-in T-Slot Stud

Page 404

Drop-in T-Slot Stud with Flanged Hex Nut

Page 405

Slide-in Economy T-Slot Stud

Page 406

Ready Tube® Connectors

Standard Tube Insert

Page 419

Extended Tube Insert

Page 420

Standard Tube Insert Kit with Hex Nut

Page 421

Standard Tube Insert Kit with Roll Pin

Page 422

Roll Pin

Page 423

Anti-Rotation Plate

Page 424

CONTINUE

Pictorial Table Of Contents

Quick Frame® Connectors

2 Way Butt Connector
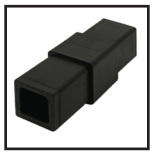
Page 425

2 Way Corner Connector

Page 426

90 Degree Straight Base Connector

Page 427

90 Degree Corner Base Connector

Page 428

3 Way Tee Connector

Page 429

3 Way Corner Connector

Page 430

4 Way Cross Connector

Page 431

4 Way Corner Connector

Page 432

5 Way Junction Connector

Page 433

6 Way Junction Connector

Page 434

Caster or Spacer Receptacle Insert
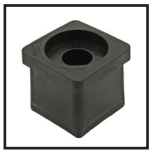
Page 435

3 Way Connector with Caster or Spacer Receptacle

Page 436

2 Way Spacer

Page 437

3 Way Hexagon Segment Connector

Page 438

30 Degree Straight Hexagon Base Connector

Page 439

60 Degree Hexagon Side and Top Connector

Page 440

20 Degree Pitch Hexagon Connector

Page 441

Quick Frame to 10 Series Transition Tee

Page 442

Introduction to Fastening Methods

There are several options when choosing your fastening method. The intent of this section is to give an overview of points to consider as well as a brief summary of fastening options. While the variety may seem overwhelming, you can narrow down your selection based on properties of your desired fastener.

Keep in mind that in most instances, there is no "one right way" or "one right answer" when choosing your method. It will depend on personal preference, circumstance, application, design and purpose.

Internal Fasteners

Anchor Fastener	End Fastener	Central Connector	Hidden Corner Connector
			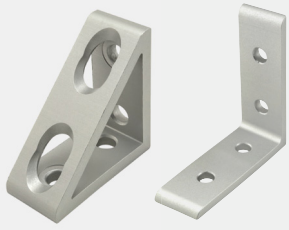
45 Degree Supports	Structural Pivots	Flat Plates	Brackets & Gussets

External Fasteners

Fastening Method Types

As a way to simplify your decision-making process, it's easiest to categorize fasteners into two main groups; internal fasteners and external fasteners. Most of the fastening connections offered by 80/20 fall into one of these two groups and each group has unique attributes and properties.

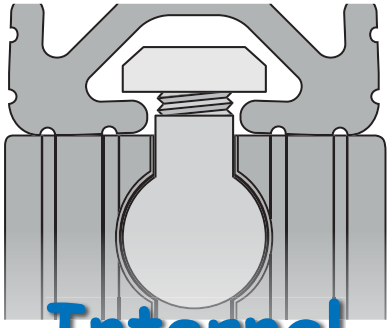

Internal

Internal connections create strong bonds between profiles because in most cases the fastener is machined into the profile. They are easy to assemble, require few parts and are simple to work into your design.

Internal Benefits

- Fastener recessed in T-slot
- Fewer parts
- Easy to assemble
- Easy to incorporate
- Hardware typically included
- Hidden connections available
- Options for infinite positioning
- Typically will not affect design area

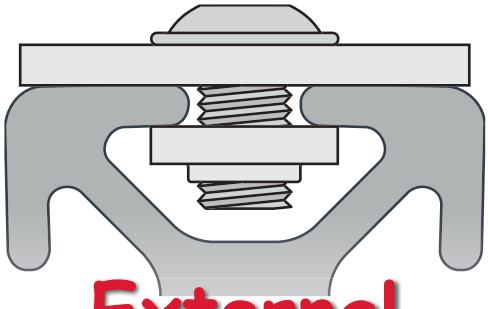

External

External connections mount to the outside of the T-slot, strengthen connection points, and are easy to implement into the application. Most external connections are reconfigurable and can be mounted anywhere along the T-slot.

External Benefits

- Mount to T-slot
- Usually no machining required
- Options for infinite positioning
- Easy to implement
- Reconfigurable connections
- Ability for variable angles
- Strengthen connection points
- Assemble with simple hardware
- Options for connecting more than two profiles

Visit Online for More

For more information on 80/20 fasteners visit www.8020.net to view the Fastener Application Test.

Get to Know Your Hardware								
Part	Part Image	No Machining	Hardware Included	Reconfigurable	Flush	More Than 2-Way Hub	Hidden	Infinite Positioning
Internal								
Anchor Fastener			✔	✔	✔			✔
End Fastener			✔		✔	✔	✔	
Inside Corner Connector		✔	✔					✔
Hidden Corner Connector		✔	✔		✔		✔	✔
Butt Fastener			✔		✔			
Miter Connector			✔		✔			
External								
Flat Plates		✔		✔				✔
Brackets and Gussets		✔		✔		✔		✔
3-Way Corner Connectors					✔	✔		
45 Degree Supports		✔	✔		✔			
Pivot Hinge Assemblies		✔		✔				✔

T-Nut Types

80/20 offers a wide variety of hardware with options in size, material, shape, thread alignment, and installation method. Three popular types of T-nuts are slide-in, drop-in, and roll-in.

Drop-In T-Nut

Drop-in T-nuts load from anywhere on the profile, making them perfect in instances where the ends of the profiles are captivated and you want to add to your application without dismantling the frame.

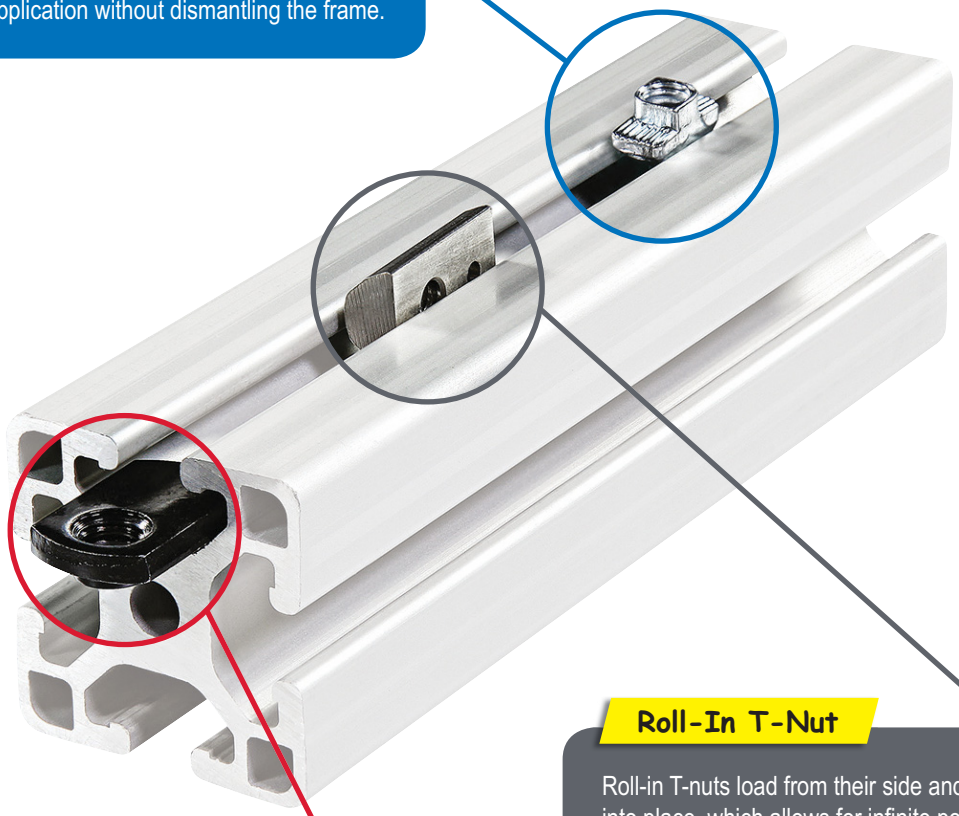

Roll-In T-Nut

Roll-in T-nuts load from their side and spin into place, which allows for infinite positioning along the T-slot. They can be used even when profiles are captivated. Roll-in T-nuts come in several variations, including self-aligning options as well as features to hold the T-nut in place for easy positioning.

Slide-In T-Nut

Slide-in T-nuts load from the end of the profile and are available in several configurations including a centered or offset thread, and material and finish options.

Hardware Options

80/20 offers a wide variety of bolt fastening options. Some of the most frequently used are Button Head, Socket Head, Flanged Button Head, Flat Head and Low Head.

Button Head (BHSCS)

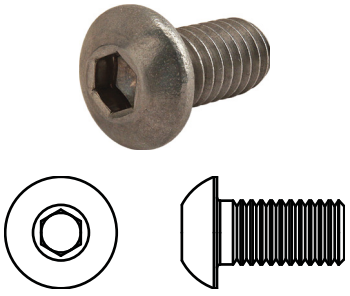

Socket Head (SHCS)

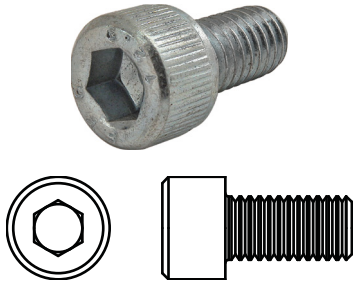

Flanged Button Head (FBHSCS)

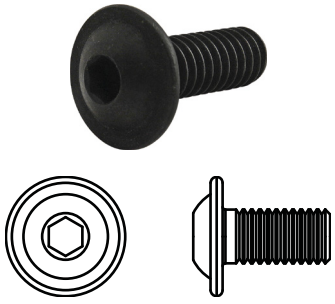

Flat Head (FHSCS)

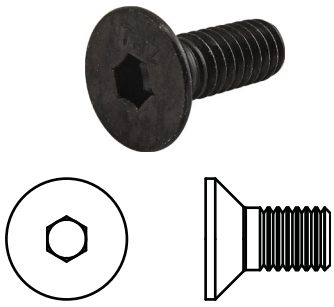

Low Head (LHSCS)

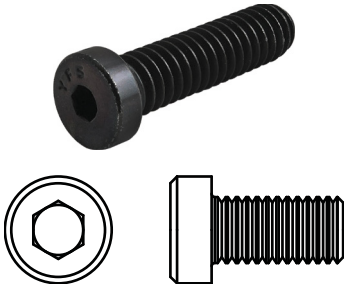

Need to Know

Possible hardware materials include: Black Zinc, Bright Zinc, Blue Zinc and Stainless Steel.

Ready Tube® Fasteners 101

80/20 offers several fastening options for Ready Tube profiles. While the most common is the Ready Connector Kit, there are also additional internal and external connection methods. Because Ready Tube profiles have pre-drilled holes, the connection methods do not require machining.

Only need a wrench!

Ready Tube Connects in 4 Steps

Standard Insert Kit

The Standard Tube Insert Kit includes all of the hardware you will need to easily assemble your project. This method is used for 90 degree connections when the end of the mounting profile is exactly .750" of an inch from the first hole centerline.

Extended Insert Kit

The Extended Tube Insert Kit also includes all of the hardware you will need to easily assemble your project. This kit is used in instances when the end of the mounting profile is not exactly .750" of an inch from the first hole centerline.

Roll Pin

The roll pin is commonly used with the standard tube insert and is an internal connection method for Ready Tube. It provides a smooth, clean finish and eliminates the need for protruding hardware when used with Ready Tube connector kits.

Compatible with Additional 15 Series Fasteners

80/20 corner brackets, gussets, and flat plates can also be used to make connections between Ready Tube profiles. All of these connection methods are external, meaning that they are easy to use, reconfigurable, and mount directly to the profile.

Quick Frame® Fasteners 101

80/20 Quick Frame connectors are made of black or gray nylon and used with a Quick Frame Profile which has built-in ridges that bite into the fastener to create tension without the use of additional hardware. The profiles connect quickly and easily using only a soft-faced mallet to form light-duty yet sturdy builds.

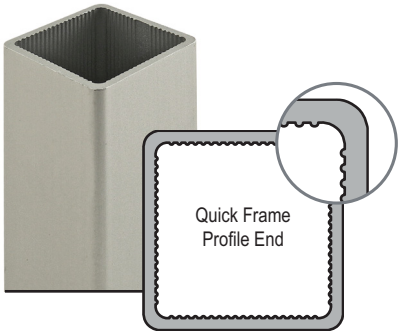

Quick Frame Connects in 4 Steps

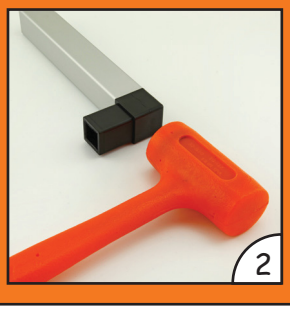

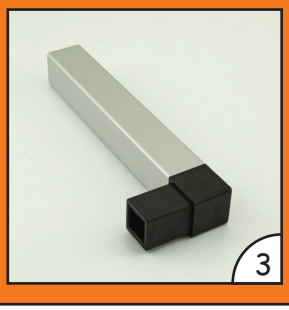

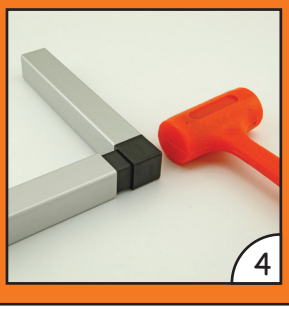

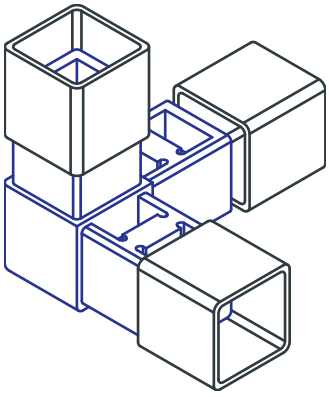

No Machining, No Additional Hardware

80/20 Quick Frame connectors require no machining or additional hardware for assembly. This fast and efficient method is perfect for lightweight and cost-effective applications that still require a sturdy and secure connection. Quick Frame connectors also do not degrade and can even be submerged in water without deteriorating.

Variety of Fastening Options

80/20 has a variety of Quick Frame fastening options that enable connections between multiple profiles (up to eight using just one connector) as well as options to join profiles at varying angles. 80/20 also offers base connectors for projects that will be attached or mounted to any flat surface or T-slot profile. Use a soft faced mallet to install Quick Frame connectors (see page 914).

Part Description:

The standard anchor fastener assembly is comprised of a socket head cap screw, cam, and T-nut. It is one of the strongest internal fastening methods, offering a long-lasting connection. The anchor fastener provides infinite positioning along the mating profile's T-slot, allowing a large degree of adjustability. The anchor fastener provides 90 degree, flush, vibration resistant connections, especially convenient where space restrictions apply. This connection method requires a counterbore machining service on the mounting profile. **Additional Information:** Cams are available separately (without the socket head cap screw and T-nut) for instances where you want to create your own custom assembly.

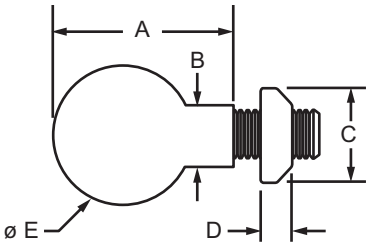

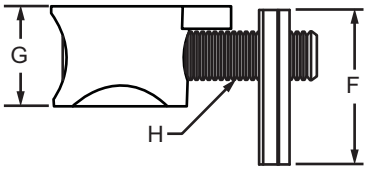

Part No.	Series	T-Nut	Cam Color	A	B	C	D	E	F	G	H	Weight
3395	10	Standard Slide-in	Bright	.730"	.245"	.431"	.171"	.562"	.490"	.406"	10-32 x .75" SHCS	.031 lb
3392	10	Standard Slide-in	Black	.730"	.245"	.431"	.171"	.562"	.490"	.406"	10-32 x .75" SHCS	.031 lb
3896	10	Standard Slide-in	Bright	.730"	.245"	.431"	.171"	.562"	.490"	.406"	M5 x 18mm SHCS	.031 lb
3665*	10	Economy Slide-in	Black	.730"	.245"	.380"	.124"	.562"	.625"	.406"	10-32 x .75" SHCS	.030 lb
3662**	10	Roll-in w/ Flex Handle	Bright	.730"	.245"	.395"	.200"	.562"	.620"	.406"	10-32 x .75" SHCS	.030 lb
3363	10	Roll-in w/ Flex Handle	Bright	.730"	.245"	.395"	.200"	.562"	.620"	.406"	10-32 x .75" SHCS	.031 lb
3360	15	Standard Slide-in	Bright	1.383"	.309"	.625"	.250"	.810"	.700"	.625"	5/16-18 x 1.30" SHCS	.101 lb
3359	15	Standard Slide-in	Black	1.383"	.309"	.625"	.250"	.810"	.700"	.625"	5/16-18 x 1.30" SHCS	.102 lb
3660**	15	Standard Slide-in	Bright	1.383"	.309"	.625"	.250"	.810"	.700"	.625"	5/16-18 x 1.30" SHCS	.101 lb
3897	15	Standard Slide-in	Bright	1.383"	.309"	.625"	.250"	.810"	.700"	.625"	M8 x 32mm SHCS	.105 lb
3362	15	Roll-in w/ Flex Handle	Bright	1.383"	.309"	.510"	.285"	.810"	.875"	.625"	5/16-18 x 1.30" SHCS	.099 lb
3373	15	Roll-in w/ Ball Spring	Bright	1.383"	.309"	.551"	.291"	.810"	.886"	.625"	5/16-18 x 1.30" SHCS	.099 lb
3661*	15	Drop-in	Bright	1.383"	.309"	.510"	.285"	.810"	.875"	.625"	5/16-18 x 1.25" SHCS	.099 lb
13184	20	Roll-in w/ Ball Spring	Bright	16.90mm	5.00mm	7.90mm	4.20mm	11.80mm	11.85mm	8.50mm	M4 x 14mm SHCS	.0091 kg
25-3896	25	Standard Slide-in	Bright	18.54mm	6.22mm	10.94mm	4.34mm	14.27mm	12.44mm	10.31mm	M5 x 18mm SHCS	.0145 kg
25-3392	25	Standard Slide-in	Black	18.54mm	6.22mm	10.94mm	6.35mm	14.27mm	12.44mm	10.31mm	M5 x 18mm SHCS	.0145 kg
25-3363	25	Roll-in w/ Flex Handle	Bright	18.54mm	6.22mm	10.03mm	5.08mm	14.27mm	15.74mm	10.31mm	M5 x 18mm SHCS	.0159 kg
13186	30	Economy Slide-in	Bright	25.00mm	8.00mm	13.00mm	3.39mm	15.70mm	20.60mm	12.50mm	M6 x 20mm SHCS	.0213 kg
40-3897	40	Standard Slide-in	Bright	33.00mm	7.84mm	15.87mm	6.35mm	19.93mm	17.45mm	15.97mm	M8 x 30mm SHCS	.0449 kg
40-3359	40	Standard Slide-in	Black	33.00mm	7.84mm	15.87mm	6.35mm	19.93mm	17.45mm	15.97mm	M8 x 30mm SHCS	.0449 kg
40-3362	40	Roll-in w/ Flex Handle	Bright	33.00mm	7.84mm	12.95mm	7.23mm	19.93mm	22.22mm	15.97mm	M8 x 30mm SHCS	.0446 kg

*Part number comes with stainless steel bolt and T-nut.

**Part number comes with stainless steel bolt and zinc T-nut.

CONTINUE

Anchor Fastener Cam Only

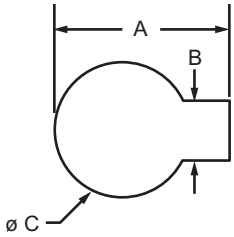

Part No.	Series	Material	Cam Color	A	B	C	D	Weight
3391	10	Zinc	Black	.730"	.245"	.562"	.406"	.015 lb
3396	10		Bright	.730"	.245"	.562"	.406"	.015 lb
3354	15		Black	1.383"	.309"	.810"	.625"	.045 lb
3361	15		Bright	1.383"	.309"	.810"	.625"	.045 lb
13183	20		Bright	16.90mm	5.00mm	11.80mm	8.50mm	.0032 kg
25-3396	25		Bright	18.54mm	6.22mm	14.27mm	10.31mm	.0069 kg
25-3391	25		Black	18.54mm	6.22mm	14.27mm	10.31mm	.0070 kg
13185	30		Bright	25.00mm	8.00mm	15.70mm	12.50mm	.0095 kg
40-3361	40		Bright	33.00mm	7.84mm	19.93mm	15.97mm	.0195 kg
40-3354	40		Black	33.00mm	7.84mm	19.93mm	15.97mm	.0195 kg

Required Machining Services

Machining Type	Profile Machined	Reference Page
Counterbore	Mounting Profile	865

Anchor Fastener Assembly

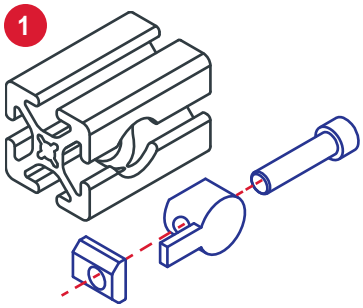

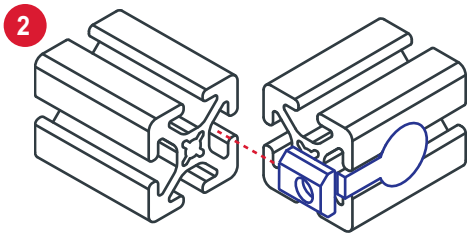

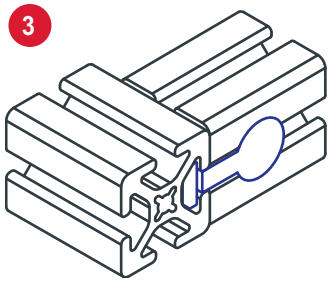

Part Description:

The double anchor fastener assembly is comprised of two socket head cap screws, two cams, and a double T-nut. This design doubles the contact between the fastener and mating profile, making an extremely strong connection. The fastener provides infinite positioning along the mating profile's T-slot, allowing a large degree of adjustability. The double anchor fastener provides 90 degree, flush, vibration resistant connections, especially convenient where space restrictions apply and is used for profiles with open T -slots opposite each other. 80/20 recommends the double anchor fastener for non-column loaded supports to add extra strength. This connection method requires a counterbore machining service on the mounting profile. **Additional Information:** Cams are available separately (see page 214) for instances where you want to create your own custom assembly.

Short Double Anchor Assembly

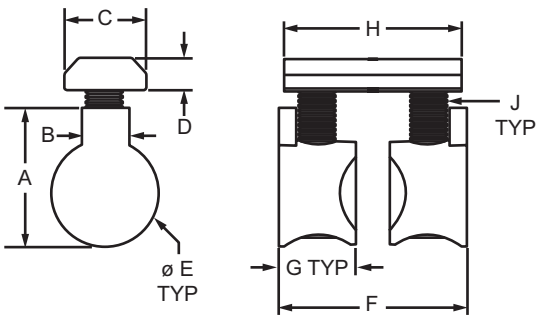

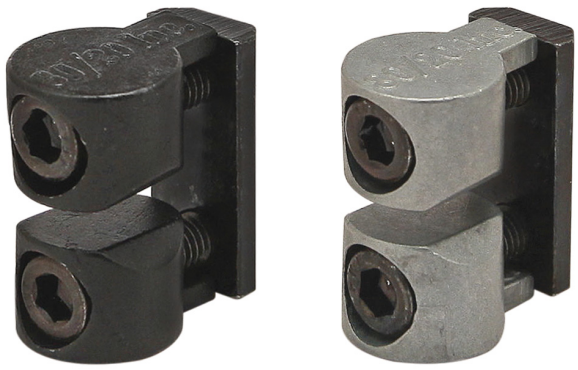

Part No.	Series	Material	Cam Color	A	B	C	D	E	F	G	H	J	Weight
3090	10	Zinc	Bright	.730"	.245"	.431"	.171"	.562"	.961"	.406"	.936"	10-32 x .75" SHCS	.061 lb
3091	10		Black	.730"	.245"	.431"	.171"	.562"	.961"	.406"	.936"	10-32 x .75" SHCS	.067 lb
3094	10		Bright	.730"	.245"	.431"	.171"	.562"	.986"	.406"	.936"	M5 x 18mm SHCS	.016 lb
3095	15		Black	1.378"	.313"	.625"	.250"	.810"	1.501"	.625"	1.437"	5/16-18 x 1.30" SHCS	.205 lb
3098	15		Bright	1.383"	.309"	.625"	.250"	.810"	1.469"	.625"	1.437"	5/16-18 x 1.30" SHCS	.205 lb
3100	15		Bright	1.383"	.309"	.625"	.250"	.810"	1.469"	.625"	1.437"	M8 x 32mm SHCS	.212 lb
25-3094	25		Bright	18.54mm	6.22mm	10.94mm	4.34mm	14.27mm	19.45mm	10.31mm	23.77mm	M5 x 18mm SHCS	.0177 kg
40-3100	40		Bright	33.00mm	7.84mm	15.87mm	6.35mm	19.93mm	39.13mm	15.97mm	38.25mm	M8 x 30mm SHCS	.0581 kg

Short Double Anchor Fastener Assembly

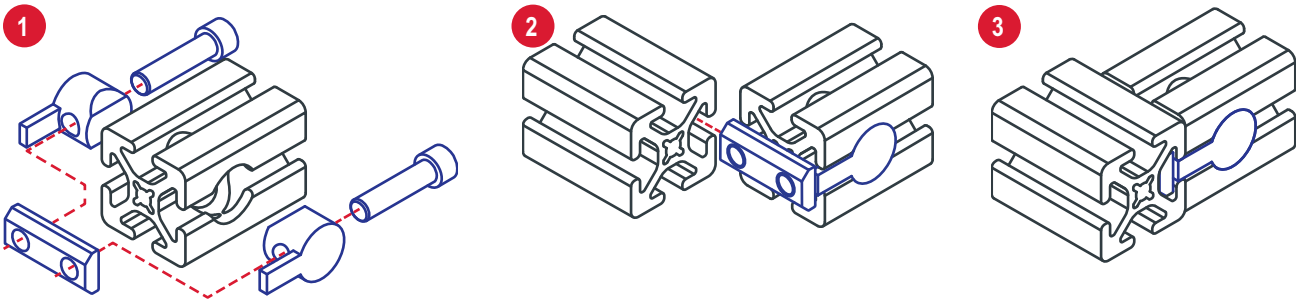

CONTINUE

Double Anchor Fastener (Continued)

Long Double Anchor Assembly

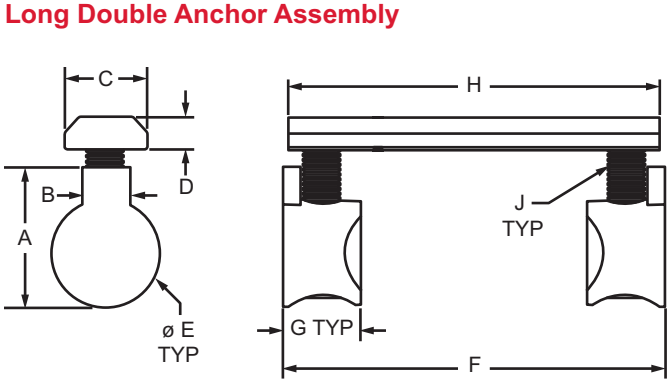

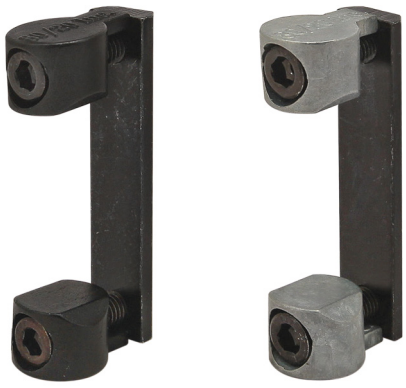

Part No.	Series	Material	Cam Color	A	B	C	D	E	F	G	H	J	Weight
3092	10	Zinc	Bright	.730"	.245"	.431"	.171"	.562"	1.961"	.406"	1.936"	10-32 x .75" SHCS	.080 lb
3093	10		Black	.730"	.245"	.431"	.171"	.562"	1.961"	.406"	1.936"	10-32 x .75" SHCS	.080 lb
3096	10		Bright	.730"	.245"	.431"	.171"	.562"	1.961"	.406"	1.936"	M5 x 18mm SHCS	.082 lb
3097	15		Black	1.383"	.309"	.625"	.250"	.810"	2.959"	.625"	2.937"	5/16-18 x 1.30" SHCS	.263 lb
3099	15		Bright	1.383"	.309"	.625"	.250"	.810"	2.959"	.625"	2.937"	5/16-18 x 1.30" SHCS	.267 lb
3102	15		Bright	1.383"	.309"	.625"	.250"	.810"	2.959"	.625"	2.937"	M8 x 32mm SHCS	.273 lb
25-3096	25		Bright	18.54mm	6.22mm	10.94mm	4.34mm	14.27mm	44.72mm	10.31mm	49.17mm	M5 x 18mm SHCS	.0263 kg
40-3102	40		Bright	33.00mm	7.84mm	15.87mm	6.35mm	19.93mm	79.07mm	15.97mm	78.15mm	M8 x 30mm SHCS	.1206 kg

Required Machining Services

Machining Type	Profile Machined	Reference Page
Counterbores	Mounting Profile	865

Long Double Anchor Fastener Assembly

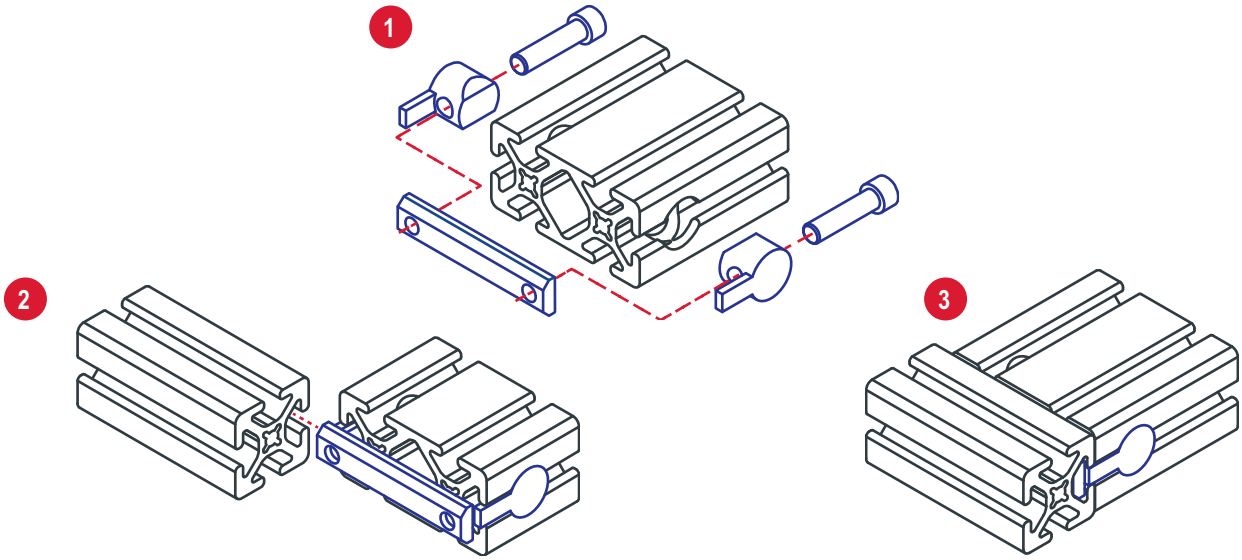

Part Description:

The butt fastener assembly is comprised of a bolt and two cams. The butt fastener connects profiles end-to-end and provides a clean, flush connection, especially convenient where space restrictions apply. The butt fastener can also be used to connect shorter bars together where logistics or space make it difficult to maneuver longer profiles. This connection method requires a counterbore machining service on each profile.

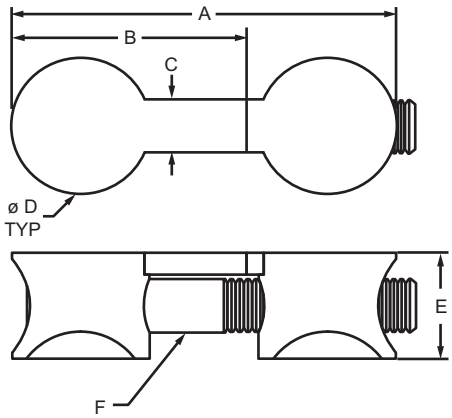

Part No.	Series	Material	Cam Color	A	B	C	D	E	F	Weight
3369	10	Zinc	Bright	1.287"	.730"	.245"	.562"	.406"	10-32 x 1.03" SHCS	.043 lb
3369-Black	10		Black	1.287"	.730"	.245"	.562"	.406"	10-32 x 1.03" SHCS	.043 lb
3370	15		Bright	2.223"	1.383"	.309"	.810"	.625"	5/16 x 1.75" SHCS	.143 lb
3370-Black	15		Black	2.223"	1.383"	.309"	.810"	.625"	5/16 x 1.75" SHCS	.143 lb
25-3369	25		Bright	37.89mm	18.54mm	6.22mm	14.14mm	10.31mm	M5 x 25mm SHCS	.0197 kg
25-3369-Black	25		Black	37.89mm	18.54mm	6.22mm	14.14mm	10.31mm	M5 x 25mm SHCS	.0197 kg
40-3370	40		Bright	58.27mm	33.00mm	7.84mm	19.93mm	15.97mm	M8 x 50mm SHCS	.0658 kg
40-3370-Black	40		Black	58.15mm	33.00mm	7.84mm	19.93mm	16.00mm	M8 x 50mm SHCS	.0658 kg

Required Machining Services

Machining Type	Profile Machined	Reference Page
Counterbore	Mounting Profiles	865

Butt Fastener Assembly

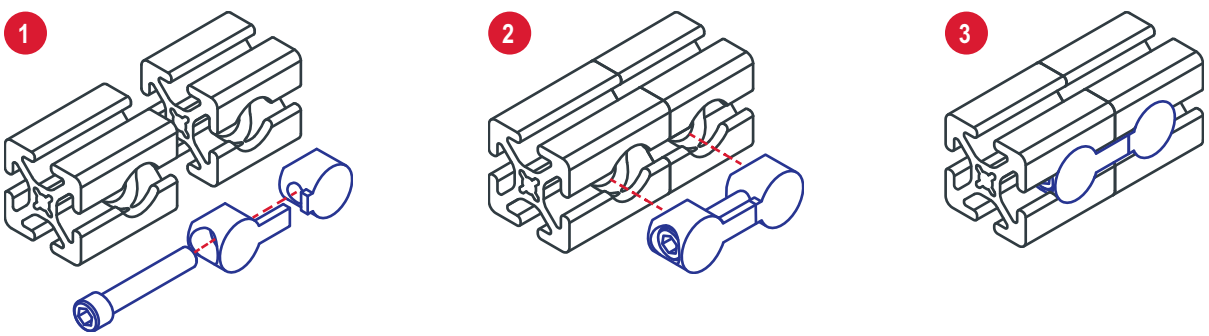

Standard End Fastener

Part Description:

The standard end fastener assembly is comprised of a button head socket cap screw and wing clip. The end fastener provides a fixed, 90 degree, moderate-strength connection that is completely hidden. The winged tabs of the clip prevent the mating profile from rotating. This connection method requires two machining services; an end tap on the mounting profile and an access hole in the mating profile in order to reach the screw head. **Additional Information:** Wing clips are available separately (without the button head socket cap screw) for instances where you want to create your own custom assembly.

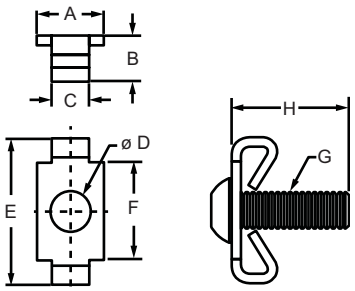

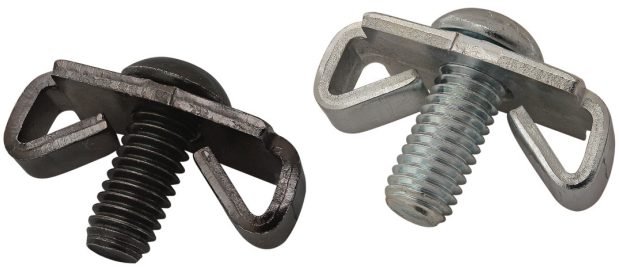

Part No.	Series	Type	Material	Color	A	B	C	D	E	F	G	H	Weight
3381	10	Assembly	Steel	Black	.431"	.293"	.240"	.257"	.937"	.625"	1/4-20	.750"	.018 lb
3682*	10	Assembly		Bright	.431"	.293"	.240"	.257"	.937"	.625"	1/4-20	.750"	.018 lb
3895	10	Assembly		Bright	.431"	.293"	.240"	.257"	.937"	.625"	M6	.787"	.018 lb
3378	10	Clip		Black	.431"	.293"	.240"	.257"	.937"	.625"	—	—	.008 lb
3681	10	Clip		Bright	.431"	.293"	.240"	.257"	.937"	.625"	—	—	.008 lb
3380	15	Assembly		Black	.625"	.450"	.300"	.340"	1.300"	1.000"	5/16-18	1.000"	.047 lb
3680*	15	Assembly		Bright	.625"	.450"	.300"	.340"	1.300"	1.000"	5/16-18	1.000"	.046 lb
3891	15	Assembly		Bright	.625"	.450"	.300"	.340"	1.300"	1.000"	M8	.984"	.045 lb
3379	15	Clip		Black	.625"	.450"	.300"	.340"	1.300"	1.000"	—	—	.025 lb
3679	15	Clip		Bright	.625"	.450"	.300"	.340"	1.300"	1.000"	—	—	.025 lb
20-3895	20	Assembly		Bright	10.00mm	4.40mm	4.80mm	5.50mm	19.00mm	16.50mm	M5	12.00mm	.0041 kg
20-3681	20	Clip		Bright	10.00mm	4.40mm	4.80mm	5.50mm	19.00mm	16.50mm	—	—	.0017 kg
25-3682*	25	Assembly		Bright	10.94mm	7.44mm	6.09mm	6.52mm	23.79mm	15.87mm	M6	16.00mm	.0080 kg
25-3895	25	Assembly		Bright	10.94mm	7.44mm	6.09mm	6.52mm	23.79mm	15.87mm	M6	16.00mm	.0082 kg
25-3681	25	Clip		Bright	10.94mm	7.44mm	6.09mm	6.52mm	23.79mm	15.87mm	—	—	.0045 kg
30-3891	30	Assembly		Bright	15.00mm	7.49mm	8.00mm	8.50mm	28.70mm	21.00mm	M8	20.00mm	.0170 kg
30-3681	30	Clip		Bright	15.00mm	7.49mm	8.00mm	8.50mm	28.70mm	21.00mm	—	—	.0079 kg
40-3680*	40	Assembly		Bright	15.87mm	11.43mm	7.62mm	8.63mm	33.02mm	25.40mm	M8	25.00mm	.0263 kg
40-3891	40	Assembly		Bright	15.87mm	11.43mm	7.62mm	8.63mm	33.02mm	25.40mm	M8	25.00mm	.0213 kg
40-3679	40	Clip		Bright	15.87mm	11.43mm	7.62mm	8.63mm	33.02mm	25.40mm	—	—	.0109 kg

*Part number comes with a stainless steel bolt.

Required Machining Services

Machining Type	Profile Machined	Reference Page
Tap Profile End	Mounting Profile	861
Access Hole	Mating Profile	863

Standard End Fastener Assembly

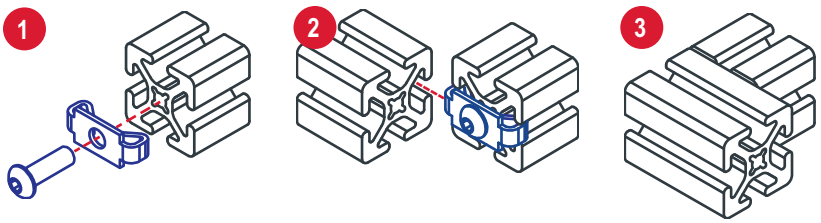

Part Description:

The single tab end fastener assembly is comprised of a button head socket cap screw and a single tab wing clip. The single tab end fastener provides a fixed, 90 degree, moderate-strength connection that is completely hidden. The single winged tab is used for closed face, radius and angled profiles; the winged tab prevents the mating profile from rotating while the straight end is flush with the mounting profile. This connection method requires two machining services; an end tap on the mounting profile and an access hole in the mating profile in order to reach the screw head. **Additional Information:** Wing clips are available separately (without the button head socket cap screw) for instances where you want to create your own custom assembly.

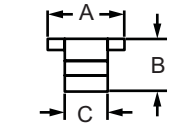

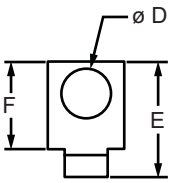

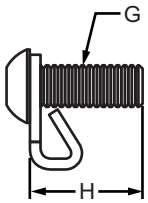

Part No.	Series	Type	Material	Color	A	B	C	D	E	F	G	H	Weight
3383	10	Assembly	Steel	Black	.431"	.293"	.240"	.275"	.645"	.489"	1/4-20	.750"	.015 lb
3183	10	Clip		Black	.431"	.293"	.240"	.275"	.645"	.489"	—	—	.005 lb
3389	15	Assembly		Black	.625"	.450"	.300"	.354"	.916"	.766"	5/16-18	1.000"	.037 lb
3189	15	Clip		Black	.625"	.450"	.300"	.354"	.916"	.766"	—	—	.010 lb
25-3383	25	Assembly		Bright	10.94mm	7.44mm	6.09mm	6.98mm	16.38mm	12.42mm	M6	16.00mm	.0068 kg
25-3183	25	Clip		Bright	10.94mm	7.44mm	6.09mm	6.98mm	16.38mm	12.42mm	—	—	.0027 kg
40-3389	40	Assembly		Bright	15.87mm	11.43mm	7.62mm	8.99mm	23.26mm	19.45mm	M8	25.00mm	.0168 kg
40-3189	40	Clip		Bright	15.87mm	11.43mm	7.62mm	8.99mm	23.26mm	19.45mm	—	—	.0064 kg

Required Machining Services

Machining Type	Profile Machined	Reference Page
Tap Profile End	Mounting Profile	861
Access Hole	Mating Profile	863

Single Tab End Fastener Assembly

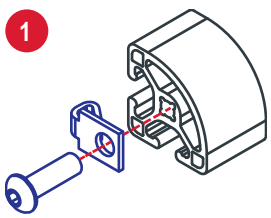

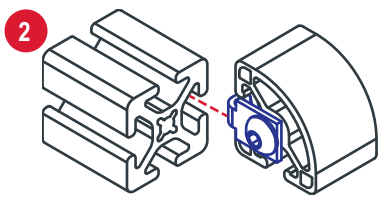

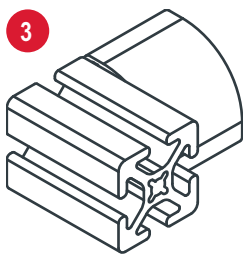

Double End Fastener

Part Description:

The double end fastener assembly is comprised of two button head socket cap screws and a double wing clip. It provides a completely hidden, fixed, 90 degree connection. The winged tabs of the clip prevent the mating profile from rotating. The double end fastener is used with larger profiles and speeds up project assembly time by replacing the need for two end fasteners. It requires an end tap service (creating two parallel through holes) on the mounting profile and two access holes in the mating profile in order to reach the screw heads. **Additional Information:** Double wing clips are available separately for instances where you want to create a custom assembly.

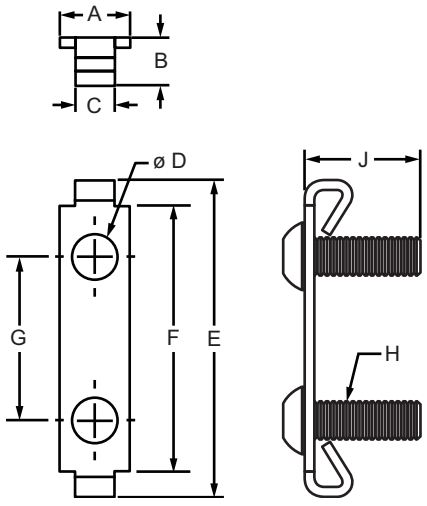

Part No.	Series	Type	Material	Color	A	B	C	D	E	F	G	H	J	Weight
3343	10	Assembly	Steel	Black	.431"	.293"	.240"	.275"	1.937"	1.625"	1.000"	1/4-20	.750"	.040 lb
3792*	10	Assembly		Bright	.431"	.293"	.240"	.275"	1.937"	1.625"	1.000"	1/4-20	.750"	.035 lb
3901	10	Assembly		Bright	.431"	.293"	.240"	.275"	1.937"	1.625"	1.000"	M6	1.000"	.034 lb
3351	10	Clip		Black	.431"	.293"	.240"	.275"	1.937"	1.625"	1.000"	—	—	.013 lb
3794	10	Clip		Bright	.431"	.293"	.240"	.275"	1.937"	1.625"	1.000"	—	—	.010 lb
3344	15	Assembly		Black	.625"	.450"	.300"	.354"	2.800"	2.500"	1.500"	5/16-18	1.000"	.090 lb
3793*	15	Assembly		Bright	.625"	.450"	.300"	.354"	2.800"	2.500"	1.500"	5/16-18	1.000"	.091 lb
3902	15	Assembly		Bright	.625"	.450"	.300"	.354"	2.800"	2.500"	1.500"	M8	.984"	.093 lb
3352	15	Clip		Black	.625"	.450"	.300"	.354"	2.800"	2.500"	1.500"	—	—	.040 lb
3795	15	Clip		Bright	.625"	.450"	.300"	.354"	2.800"	2.500"	1.500"	—	—	.040 lb

*Part number comes with stainless steel bolts.

Required Machining Services

Machining Type	Profile Machined	Reference Page
Tap Profile End	Mounting Profile	861
Access Hole	Mating Profile	863

Double End Fastener Assembly

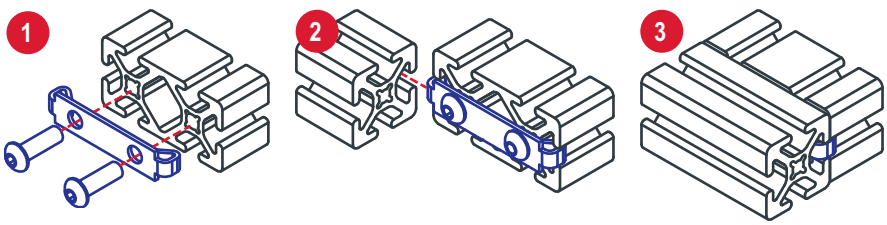

Part Description:

The hidden corner connector provides a 90 degree hidden corner connection. The corner connector comes with set screws that allow for quick, easy connections. This connection can be between the inside of two profiles or between the inside of one profile and the outside of the second profile. The hidden corner connector does not require any machining, making it a cost-effective fastening option.

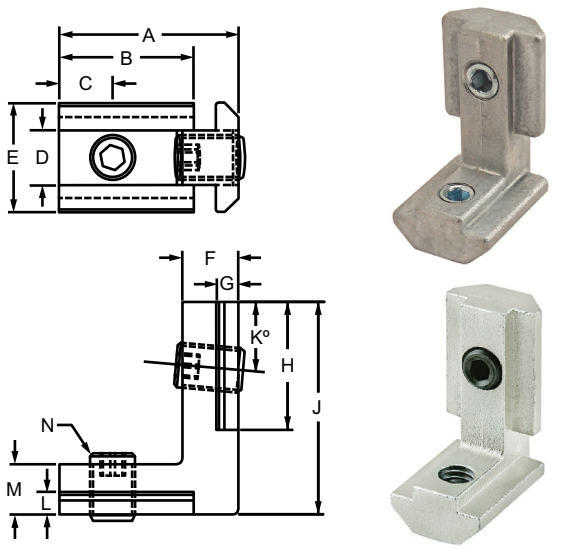

Inside-Inside Connector

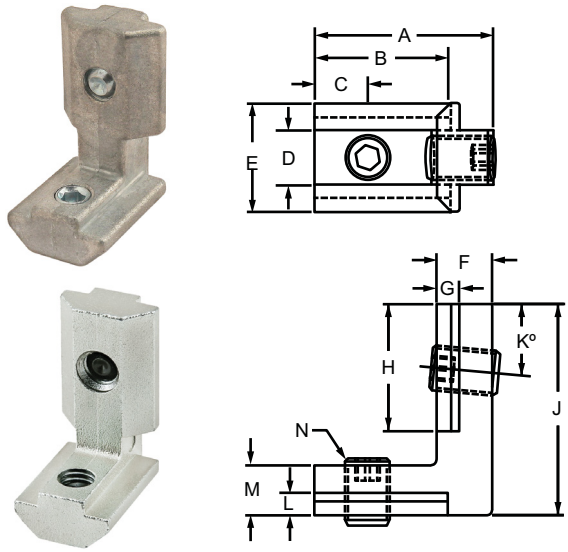

Inside-Outside Connector

Part No.	Series	Type	Material	A	B	C	D	E	F	G	H	J	K	L	M	N	Weight
33440*	10 25	Inside-Inside	Bright Zinc	.700"	.623"	.200"	.238"	.480"	.258"	.185"	.641"	1.000"	5°	.185"	.258"	M5 x 0.8	.028 lb
33460*	10 25	Inside-Outside		.700"	.623"	.200"	.238"	.480"	.258"	.185"	.641"	1.000"	5°	.185"	.258"	M5 x 0.8	.028 lb
33450**	15 30 40	Inside-Inside	Natural Zinc	.827"	.750"	.236"	.307"	.621"	.323"	.228"	.638"	1.181"	5°	.228"	.313"	M6 x 12	.054 lb
33470**	15 30 40	Inside-Outside		.827"	.732"	.236"	.307"	.621"	.323"	.228"	.638"	1.181"	5°	.228"	.313"	M6 x 12	.052 lb
33490***	45	Inside-Inside	Bright Zinc	32.00mm	28.00mm	10.00mm	9.80mm	19.00mm	8.70mm	3.80mm	25.00mm	38.00mm	0°	3.80mm	8.70mm	M8 x 12	.0445 kg
33530***	45	Inside-Outside		32.00mm	28.00mm	10.00mm	9.80mm	19.00mm	8.70mm	3.80mm	25.00mm	38.00mm	0°	3.80mm	8.70mm	M8 x 12	.0445 kg

*The suggested tool to tighten the included hardware is a 2.5mm hex wrench.

**The suggested tool to tighten the included hardware is a 3mm hex wrench.

***The suggested tool to tighten the included hardware is a 4mm hex wrench.

Hidden Corner Connector Assembly

Inside-Outside Connector Shown

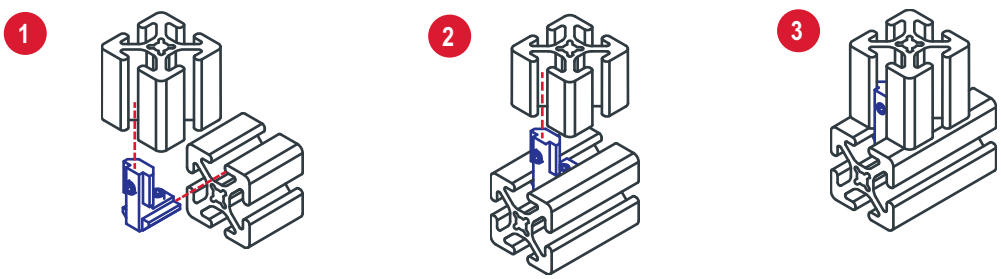

Miter Connector

Part Description:

The miter connector creates strong, internal connections ranging from 90 degrees to 180 degrees. A miter connection reduces rotation between the profiles. This connection requires that both profiles have a miter cut machining service as well as counterbores in both the mounting and mating profiles.

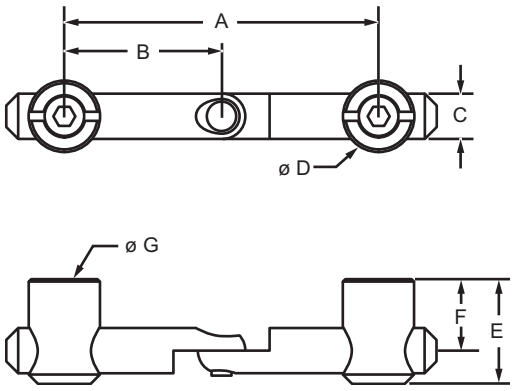

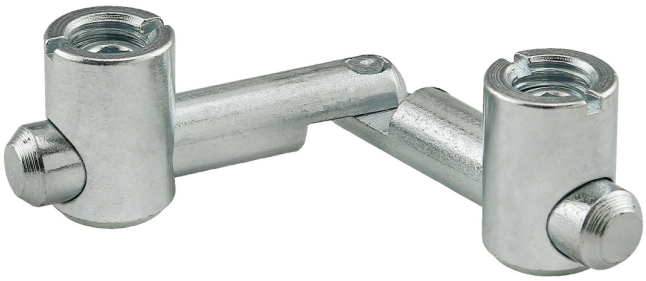

Part No.	Series	Material	Finish	A	B	C	D	E	F	G	Weight
13193	15 40 45	Steel	Bright Zinc	66.00mm (2.598")	33.00mm (1.299")	9.50mm (.374")	15.00mm (.591")	22.00mm (.866")	15.00mm (.591")	M10 x 12	.0795 kg (.175 lb)

Required Machining Services

Machining Type	Profile Machined	Reference Page
Miter Connector Profile Milling	Each Profile	876

Miter Connector Assembly

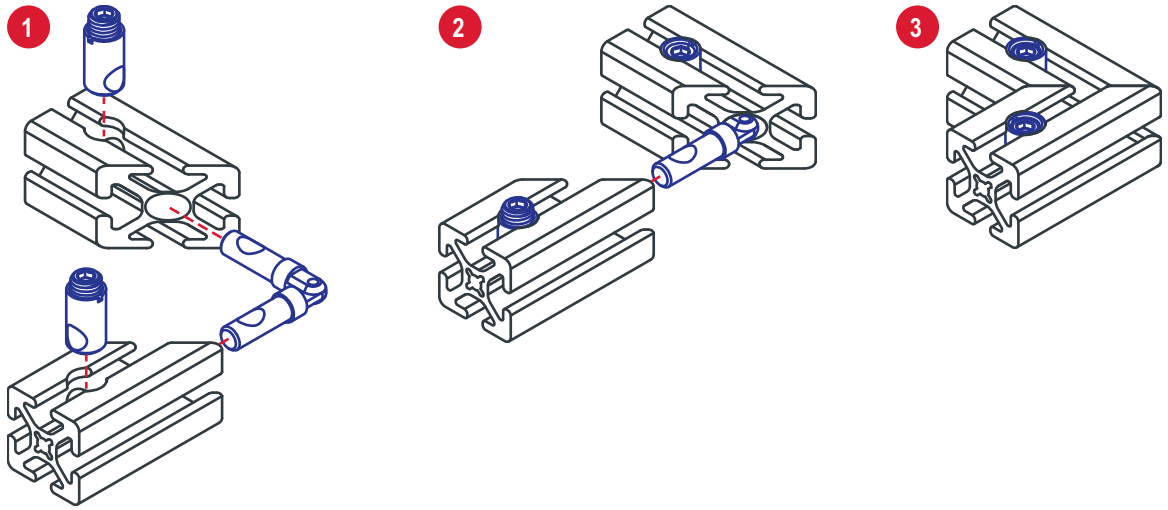

Part Description:

The 90 degree inside corner connector is a strong method for creating 90 degree connections between profiles. There are options available in aluminum or zinc. The required hardware is included with the connectors and no machining services are required, making it a cost-effective fastening method. The zinc connector has a tapped hole for panel mounting. **Tip:** The suggested tool to tighten the included hardware is a 1/8" (3.175mm) hex key.

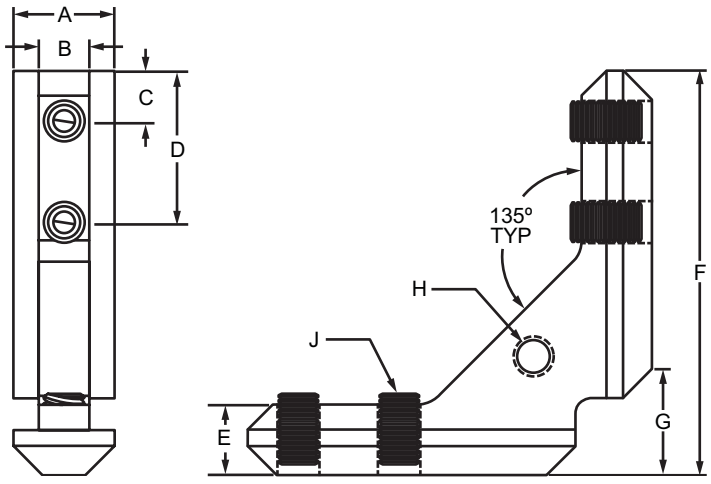

Aluminum

Zinc

Part No.	Series	Material	Finish	A	B	C	D	E	F	G	H	J	Weight
3364	15 40	Aluminum	Anodize	.625"	.313"	.312"	.937"	.436"	2.50"	.655"	—	1/4-20 x 1/2"	.097 lb
3368*	15 40	Zinc	Natural	.625"	.313"	.312"	.937"	.436"	2.50"	.655"	1/4-20 Tap	1/4-20 x 1/2"	.192 lb
40-3368*	40			15.88mm	7.95mm	7.92mm	23.79mm	11.07mm	63.50mm	16.63mm	1/4-20 Tap	1/4-20 x 1/2"	.0821 kg

*Tap thru available

90 Degree Inside Corner Connector Assembly

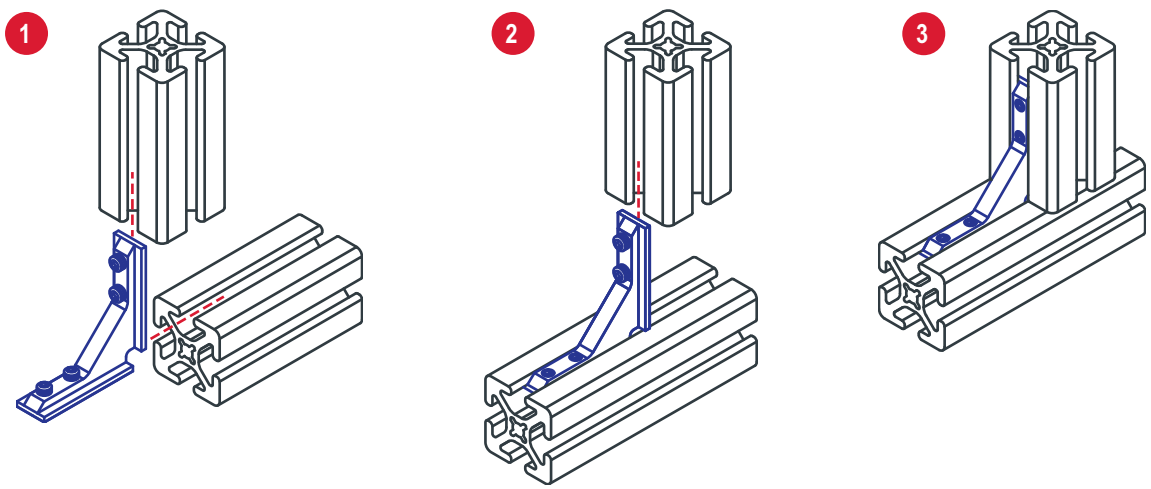

Central Connector

Part Description:

The central connector is an assembly comprised of a cam, conical set screw, spring or o-ring, and T-stud. It is a strong internal fastening method, offering a long-lasting connection. The central connector can be used when profile ends are captivated and it provides infinite positioning along the mating profile's T-slot, allowing a large degree of adjustability. The central connector is a 90 degree, hidden, aesthetic connection. This connection method requires a central connector profile milling machining service.

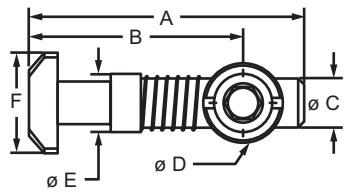

Horizontal

Vertical

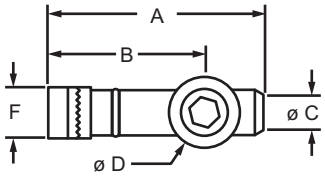

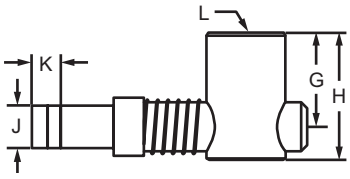

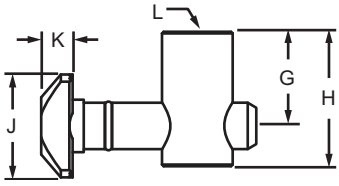

Part No.	Series	Orientation	Spring	Material	A	B	C	D	E	F	G	H	J	K	L	Weight
13187	15 40	Vertical	Yes	Steel	2.047"	1.594"	.374"	.590"	.444"	.307"	.669"	.945"	.748"	.217"	M12 x 12	.0485 kg
13188	15 40	Horizontal			2.047"	1.594"	.374"	.590"	.444"	.748"	.669"	.945"	.307"	.217"	M12 x 12	.0462 kg
13194	30	Vertical	No		32.80mm	23.80mm	6.90mm	10.80mm	—	7.80mm	14.00mm	20.00mm	15.30mm	4.80mm	M8 x 10	.0426 kg
13195	30	Horizontal			32.80mm	23.80mm	6.90mm	10.80mm	—	15.30mm	14.00mm	20.00mm	7.80mm	4.80mm	M8 x 10	.0426 kg
14012	45	Vertical	No		45.50mm	32.00mm	9.60mm	16.70mm	—	9.60mm	18.00mm	28.00mm	19.50mm	5.40mm	M12 x 12	.0558 kg
14013	45	Horizontal			45.50mm	32.00mm	9.60mm	16.70mm	—	19.50mm	18.00mm	28.00mm	9.60mm	5.40mm	M12 x 12	.0553 kg

Required Machining Services

Machining Type	Profile Machined	Reference Page
Central Connector Profile Milling	Mounting Profile	878

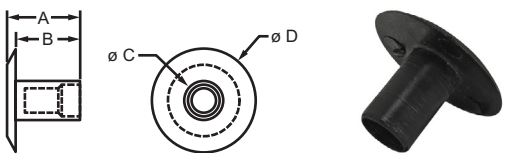

Central Connector Cover Cap

Part No.	Series	Material	A	B	C	D	Weight
13001	45	Black Nylon	12.00mm	10.50mm	6.40mm	17.00mm	.0022 Kg

Central Connector Assembly

Vertical Central Connector Shown

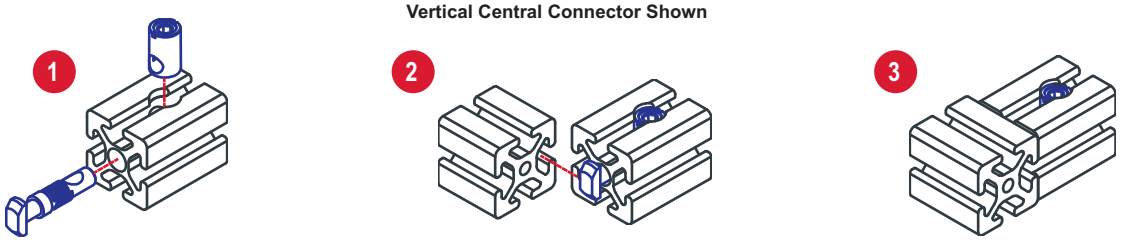

Part Description:

The bolt connector is an assembly connection providing an internal, long-lasting fastening method. The bolt connector loads from the side or end of the profile and forms a 90 degree connection. This fastening method requires only a drill through machining service to the mounting profile.

13189

13190
13192

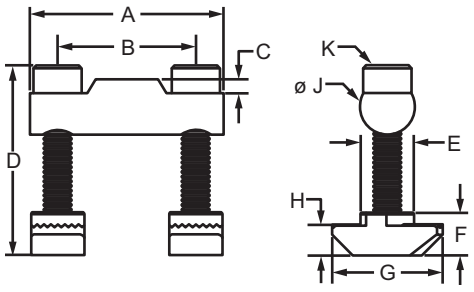

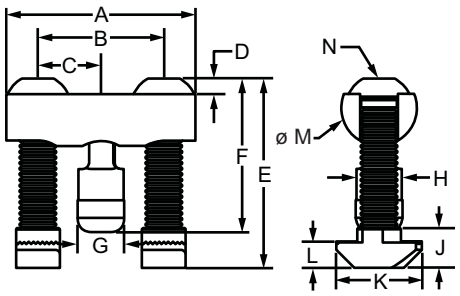

Part No.	Series	Material	A	B	C	D	E	F	G	H	J	K	L	M	N	Weight
13189	30	Steel	28.00mm	20.00mm	2.00mm	29.00mm	7.70mm	6.20mm	16.00mm	4.40mm	8.00mm	M4 x 25mm	—	—	—	.0243 kg
13190	45		42.00mm	28.00mm	14.00mm	3.40mm	44.40mm	36.50mm	10.30mm	9.70mm	8.80mm	19.00mm	5.80mm	16.80mm	M8 x 40	.0755 kg
13192	45		87.00mm	73.00mm	14.00mm	3.25mm	39.25mm	36.25mm	10.30mm	10.10mm	8.80mm	19.00mm	5.80mm	16.80mm	M8 x 35	.0130 kg

Required Machining Services

Machining Type	Profile Machined	Reference Page
Bolt Connector Profile Milling	Mounting Profile	880

Bolt Connector Assembly

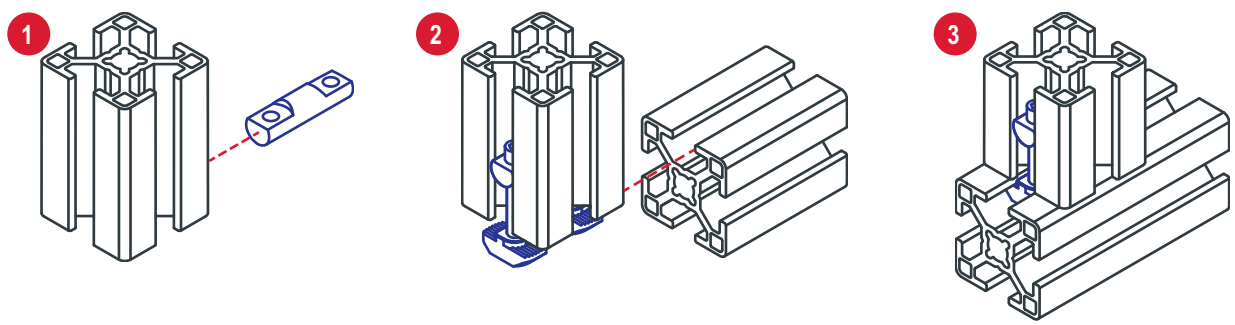

Milling Connector

Part Description:

The milling connector provides a strong, internal fastening method that requires no profile machining. It allows infinite positioning along the mating profile and can be used even when the mating profile end is captivated. The point of the set screw bites into the bottom of the T-slot profile, making it a secure connection. The milling connector can be used in pairs.

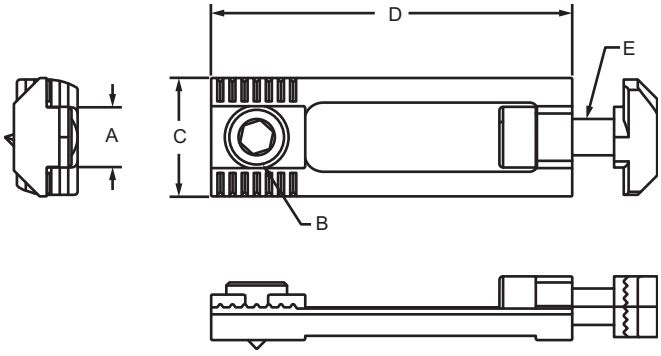

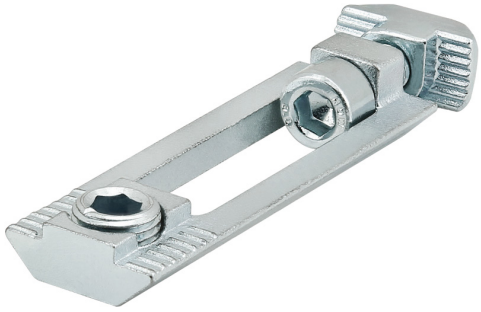

Part No.	Series	Material	Color	A	B	C	D	E	Weight
14116	30	Steel	Bright	7.80mm	M8 x 11	16.00mm	57.50mm	M5 x 14	.0499 kg
14132	15 40			7.80mm	M8 x 11	18.00mm	57.50mm	M5 x 16	.0544 kg
14133	45			9.80mm	M10 x 11	19.50mm	59.50mm	M6 x 20	.0680 kg

Milling Connector Assembly

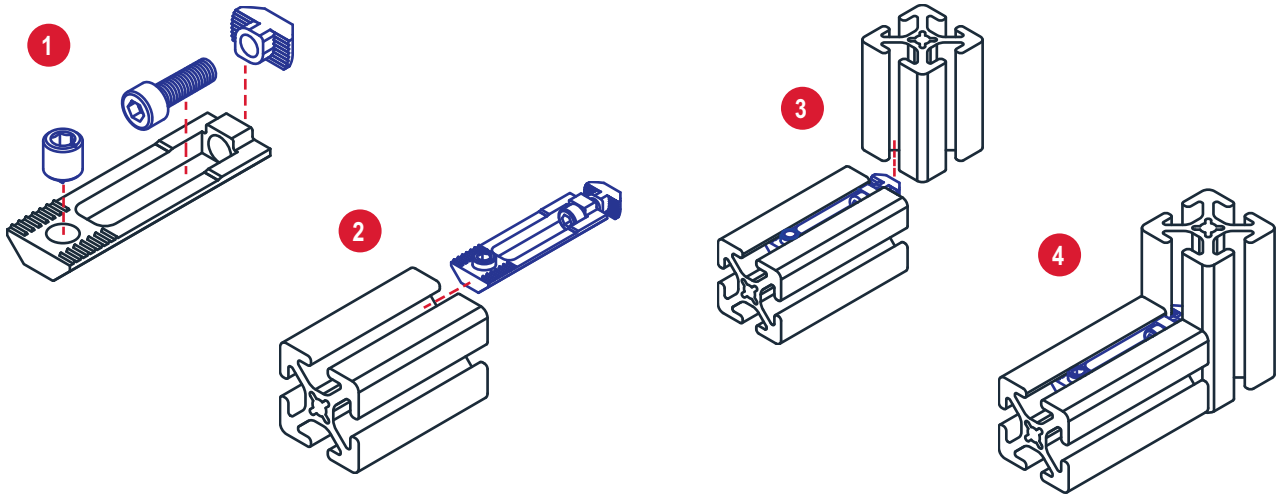

Part Description:

The plate connector is a strong external fastening method offering a long-lasting connection. The plate connector loads from the side or end of the profile and forms a 90 degree connection. The plate connector allows users to mount to the mating profile's T-slot acting as a drop-in connector. This fastening method requires only an end tap machining service to the mounting profile.

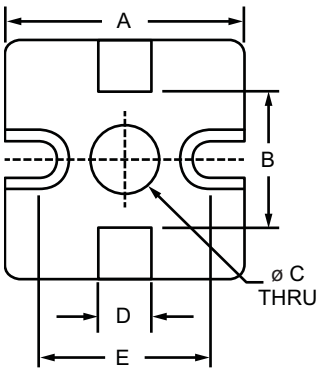

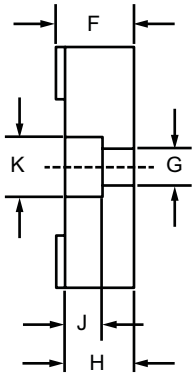

Powder Coat

Natural

Part No.	Series	Material	Finish	A	B	C	D	E	F	G	H	J	K	Weight
14137	45	Zinc	Natural	45.00mm	24.50mm	13.00mm	10.00mm	32.00mm	14.70mm	6.50mm	13.00mm	7.00mm	11.00mm	.0921 kg
14136	45		Powder Coat	45.00mm	24.50mm	13.00mm	10.00mm	32.00mm	14.70mm	6.50mm	13.00mm	7.00mm	11.00mm	.0894 kg

Required Machining Services

Machining Type	Profile Machined	Reference Page
Tap Profile End	Mounting Profile	861

Suggested Hardware (Mount to Profile)

Part No.	Series	Qty.	Description
13004	45	1	M12 x 30mm Six Lobe Screw
11-6516	45	2	M6 x 16mm SHCS
13129	45	2	M6 Drop-in T-Nut

Plate Connector Assembly

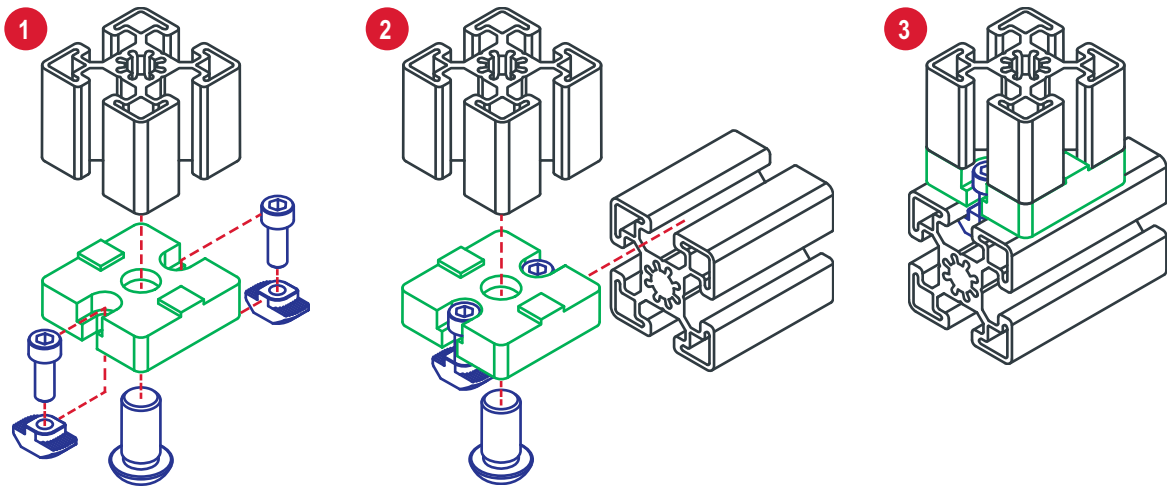

45 Degree Support Connector

Part Description:

The 45 degree support connector provides a clean, flush connection and is typically used to reinforce a 90 degree connection. It requires minimal machining (an end tap to the support bar) and mounts using standard hardware. The 45 degree support connector is designed for use with 40mm by 40mm profiles. This connection lends itself to applications with heavy loads to minimize beam deflection.

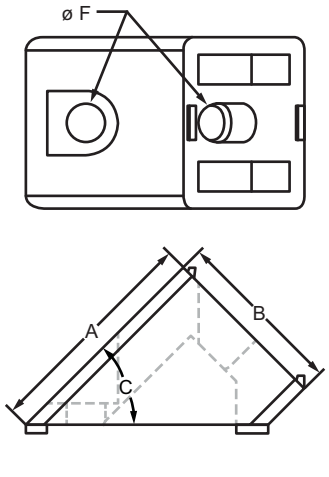

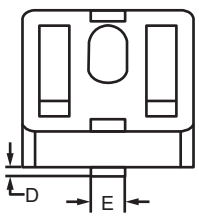

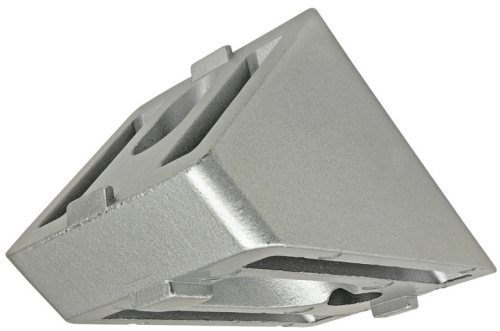

Part No.	Series	Material	Finish	A	B	C	D	E	F	Weight
14118	40	Aluminum	Clear Powder Coat	52.00mm	40.00mm	45°	2.00mm	8.00mm	9.00mm	.2123 kg

Required Machining Services

Machining Type	Profile Machined	Reference Page
Tap Profile End	Profile End	861

Suggested Hardware (Mount to T-Slot)

Part No.	Series	Qty.	Description	T-Nut	Location
11-8520	40	1	M8 x 20mm SHCS	—	To Profile End
75-3621	40	1	M8 x 16mm SHCS	Economy	To T-Slot

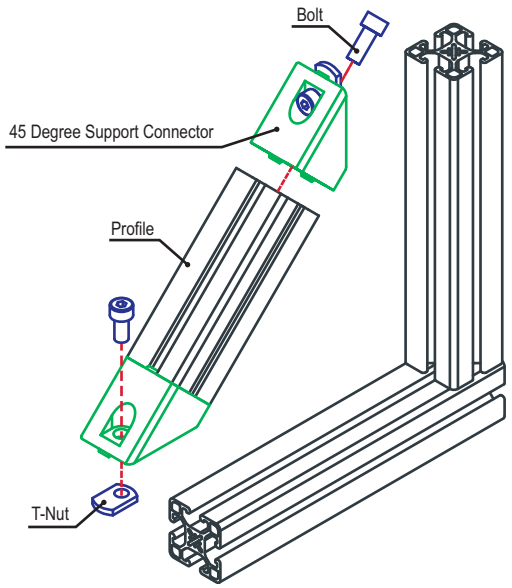

Part Description:

The 45 degree support assembly includes socket head cap screws, washers and T-nuts. The support assembly is pre-machined with counterbores and a 45 degree miter angle on both ends. This fastening method provides a clean, flush connection and is typically used to reinforce a 90 degree connection. This connection lends itself to applications with heavy loads to minimize beam deflection.

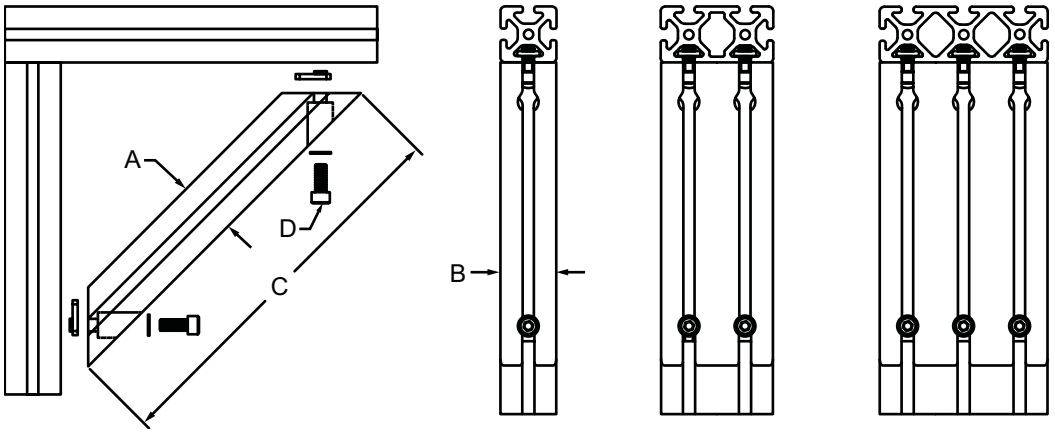

Part No.	Series	Profile	A	B	C	D (Included Hardware)						Weight	Product Representation (Length Will Vary)
						Bolt	Qty.	T-Nut	Qty.	Washer	Qty.		
2565	10	1010	1.000”	1.000”	6.000”	3067	2	3382	2	3258	2	.244 lb	
2565-Black	10	1010-Black	1.000”	1.000”	6.000”	3067	2	3382	2	3258	2	.244 lb	
2570	10	1010	1.000”	1.000”	12.000”	3067	2	3382	2	3258	2	.581 lb	
2570-Black	10	1010-Black	1.000”	1.000”	12.000”	3067	2	3382	2	3258	2	.581 lb	
2575	10	1010	1.000”	1.000”	18.000”	3067	2	3382	2	3258	2	.845 lb	
2575-Black	10	1010-Black	1.000”	1.000”	18.000”	3067	2	3382	2	3258	2	.845 lb	
2583	10	1010	1.000”	1.000”	24.000”	3067	2	3382	2	3258	2	1.056 lb	
2583-Black	10	1010-Black	1.000”	1.000”	24.000”	3067	2	3382	2	3258	2	1.056 lb	
2566	10	1020	1.000”	2.000”	6.000”	3067	4	3382	4	3258	4	.573 lb	
2566-Black	10	1020-Black	1.000”	2.000”	6.000”	3067	4	3382	4	3258	4	.573 lb	
2567	10	1020	1.000”	2.000”	12.000”	3067	4	3382	4	3258	4	1.041 lb	
2567-Black	10	1020-Black	1.000”	2.000”	12.000”	3067	4	3382	4	3258	4	1.041 lb	
2568	10	1020	1.000”	2.000”	18.000”	3067	4	3382	4	3258	4	1.509 lb	
2568-Black	10	1020-Black	1.000”	2.000”	18.000”	3067	4	3382	4	3258	4	1.509 lb	
2584	10	1020	1.000”	2.000”	24.000”	3067	4	3382	4	3258	4	1.872 lb	
2584-Black	10	1020-Black	1.000”	2.000”	24.000”	3067	4	3382	4	3258	4	1.872 lb	
2571	10	1030	1.000”	3.000”	6.000”	3067	6	3382	6	3258	6	.660 lb	
2571-Black	10	1030-Black	1.000”	3.000”	6.000”	3067	6	3382	6	3258	6	.660 lb	
2572	10	1030	1.000”	3.000”	12.000”	3067	6	3382	6	3258	6	1.579 lb	
2572-Black	10	1030-Black	1.000”	3.000”	12.000”	3067	6	3382	6	3258	6	1.579 lb	
2573	10	1030	1.000”	3.000”	18.000”	3067	6	3382	6	3258	6	2.263 lb	
2573-Black	10	1030-Black	1.000”	3.000”	18.000”	3067	6	3382	6	3258	6	2.263 lb	
2574	10	1030	1.000”	3.000”	24.000”	3067	6	3382	6	3258	6	2.669 lb	
2574-Black	10	1030-Black	1.000”	3.000”	24.000”	3067	6	3382	6	3258	6	2.669 lb	

CONTINUE

45 Degree Supports (Continued)

Part No.	Series	Profile	A	B	C	D (Included Hardware)						Weight	Product Representation (Length Will Vary)
						Bolt	Qty.	T-Nut	Qty.	Washer	Qty.		
2556	15	1501	1.500"	1.500"	6.000"	3112	2	3278	2	3260	6	.517 lb	
2556-Black	15	1501-Black	1.500"	1.500"	6.000"	3112	2	3278	2	3260	6	.517 lb	
2557	15	1501	1.500"	1.500"	12.000"	3112	2	3278	2	3260	6	1.096 lb	
2557-Black	15	1501-Black	1.500"	1.500"	12.000"	3112	2	3278	2	3260	6	1.096 lb	
2558	15	1501	1.500"	1.500"	18.000"	3112	2	3278	2	3260	6	1.594 lb	
2558-Black	15	1501-Black	1.500"	1.500"	18.000"	3112	2	3278	2	3260	6	1.594 lb	
2559	15	1501	1.500"	1.500"	24.000"	3112	2	3278	2	3260	6	2.092 lb	
2559-Black	15	1501-Black	1.500"	1.500"	24.000"	3112	2	3278	2	3260	6	2.092 lb	
2533	15	1515-ULS	1.500"	1.500"	6.000"	3112	2	3278	2	3260	2	.568 lb	
2533-Black	15	1515-ULS-Black	1.500"	1.500"	6.000"	3112	2	3278	2	3260	2	.568 lb	
2534	15	1515-ULS	1.500"	1.500"	12.000"	3112	2	3278	2	3260	2	1.036 lb	
2534-Black	15	1515-ULS-Black	1.500"	1.500"	12.000"	3112	2	3278	2	3260	2	1.036 lb	
2537	15	1515-ULS	1.500"	1.500"	18.000"	3112	2	3278	2	3260	2	1.504 lb	
2537-Black	15	1515-ULS-Black	1.500"	1.500"	18.000"	3112	2	3278	2	3260	2	1.504 lb	
2538	15	1515-ULS	1.500"	1.500"	24.000"	3112	2	3278	2	3260	2	1.972 lb	
2538-Black	15	1515-ULS-Black	1.500"	1.500"	24.000"	3112	2	3278	2	3260	2	1.972 lb	
2527	15	1515-UL	1.500"	1.500"	6.000"	3112	2	3278	2	3260	2	.579 lb	
2527-Black	15	1515-UL-Black	1.500"	1.500"	6.000"	3112	2	3278	2	3260	2	.579 lb	
2528	15	1515-UL	1.500"	1.500"	12.000"	3112	2	3278	2	3260	2	1.053 lb	
2528-Black	15	1515-UL-Black	1.500"	1.500"	12.000"	3112	2	3278	2	3260	2	1.053 lb	
2529	15	1515-UL	1.500"	1.500"	18.000"	3112	2	3278	2	3260	2	1.529 lb	
2529-Black	15	1515-UL-Black	1.500"	1.500"	18.000"	3112	2	3278	2	3260	2	1.529 lb	
2532	15	1515-UL	1.500"	1.500"	24.000"	3112	2	3278	2	3260	2	2.006 lb	
2532-Black	15	1515-UL-Black	1.500"	1.500"	24.000"	3112	2	3278	2	3260	2	2.006 lb	
2539	15	1515-LS	1.500"	1.500"	6.000"	3112	2	3278	2	3260	2	.626 lb	
2539-Black	15	1515-LS-Black	1.500"	1.500"	6.000"	3112	2	3278	2	3260	2	.626 lb	
2542	15	1515-LS	1.500"	1.500"	12.000"	3112	2	3278	2	3260	2	1.115 lb	
2542-Black	15	1515-LS-Black	1.500"	1.500"	12.000"	3112	2	3278	2	3260	2	1.115 lb	
2543	15	1515-LS	1.500"	1.500"	18.000"	3112	2	3278	2	3260	2	1.679 lb	
2543-Black	15	1515-LS-Black	1.500"	1.500"	18.000"	3112	2	3278	2	3260	2	1.679 lb	
2544	15	1515-LS	1.500"	1.500"	24.000"	3112	2	3278	2	3260	2	2.206 lb	
2544-Black	15	1515-LS-Black	1.500"	1.500"	24.000"	3112	2	3278	2	3260	2	2.206 lb	
2562	15	1515-Lite	1.500"	1.500"	6.000"	3112	2	3278	2	3260	2	.447 lb	
2562-Black	15	1515-Lite-Black	1.500"	1.500"	6.000"	3112	2	3278	2	3260	2	.447 lb	
2561	15	1515-Lite	1.500"	1.500"	12.000"	3112	2	3278	2	3260	2	1.168 lb	
2561-Black	15	1515-Lite-Black	1.500"	1.500"	12.000"	3112	2	3278	2	3260	2	1.168 lb	
2563	15	1515-Lite	1.500"	1.500"	18.000"	3112	2	3278	2	3260	2	1.702 lb	
2563-Black	15	1515-Lite-Black	1.500"	1.500"	18.000"	3112	2	3278	2	3260	2	1.702 lb	
2564	15	1515-Lite	1.500"	1.500"	24.000"	3112	2	3278	2	3260	2	2.236 lb	
2564-Black	15	1515-Lite-Black	1.500"	1.500"	24.000"	3112	2	3278	2	3260	2	2.236 lb	
2546	15	1515-S	1.500"	1.500"	6.000"	3112	2	3278	2	3260	2	.787 lb	
2546-Black	15	1515-S-Black	1.500"	1.500"	6.000"	3112	2	3278	2	3260	2	.787 lb	
2547	15	1515-S	1.500"	1.500"	12.000"	3112	2	3278	2	3260	2	1.475 lb	
2547-Black	15	1515-S-Black	1.500"	1.500"	12.000"	3112	2	3278	2	3260	2	1.475 lb	
2548	15	1515-S	1.500"	1.500"	18.000"	3112	2	3278	2	3260	2	2.162 lb	
2548-Black	15	1515-S-Black	1.500"	1.500"	18.000"	3112	2	3278	2	3260	2	2.162 lb	
2549	15	1515-S	1.500"	1.500"	24.000"	3112	2	3278	2	3260	2	2.850 lb	
2549-Black	15	1515-S-Black	1.500"	1.500"	24.000"	3112	2	3278	2	3260	2	2.850 lb	

View page 229 for dimensional drawing

CONTINUE

Part No.	Series	Profile	A	B	C	D (Included Hardware)						Weight	Product Representation (Length Will Vary)
						Bolt	Qty.	T-Nut	Qty.	Washer	Qty.		
2525	15	1515	1.500"	1.500"	6.000"	3112	2	3278	2	3260	2	.706 lb	
2525-Black	15	1515-Black	1.500"	1.500"	6.000"	3112	2	3278	2	3260	2	.706 lb	
2535	15	1515	1.500"	1.500"	12.000"	3112	2	3278	2	3260	2	1.492 lb	
2535-Black	15	1515-Black	1.500"	1.500"	12.000"	3112	2	3278	2	3260	2	1.492 lb	
2545	15	1515	1.500"	1.500"	18.000"	3112	2	3278	2	3260	2	2.188 lb	
2545-Black	15	1515-Black	1.500"	1.500"	18.000"	3112	2	3278	2	3260	2	2.188 lb	
2555	15	1515	1.500"	1.500"	24.000"	3112	2	3278	2	3260	2	2.884 lb	
2555-Black	15	1515-Black	1.500"	1.500"	24.000"	3112	2	3278	2	3260	2	2.884 lb	
2551	15	1530-LS	1.500"	3.000"	6.000"	3112	4	3278	4	3260	4	1.216 lb	
2551-Black	15	1530-LS-Black	1.500"	3.000"	6.000"	3112	4	3278	4	3260	4	1.216 lb	
2552	15	1530-LS	1.500"	3.000"	12.000"	3112	4	3278	4	3260	4	2.233 lb	
2552-Black	15	1530-LS-Black	1.500"	3.000"	12.000"	3112	4	3278	4	3260	4	2.233 lb	
2553	15	1530-LS	1.500"	3.000"	18.000"	3112	4	3278	4	3260	4	3.250 lb	
2553-Black	15	1530-LS-Black	1.500"	3.000"	18.000"	3112	4	3278	4	3260	4	3.250 lb	
2554	15	1530-LS	1.500"	3.000"	24.000"	3112	4	3278	4	3260	4	4.267 lb	
2554-Black	15	1530-LS-Black	1.500"	3.000"	24.000"	3112	4	3278	4	3260	4	4.267 lb	
2578	15	1530-Lite	1.500"	3.000"	6.000"	3112	4	3278	4	3260	4	.865 lb	
2578-Black	15	1530-Lite-Black	1.500"	3.000"	6.000"	3112	4	3278	4	3260	4	.865 lb	
2579	15	1530-Lite	1.500"	3.000"	12.000"	3112	4	3278	4	3260	4	2.263 lb	
2579-Black	15	1530-Lite-Black	1.500"	3.000"	12.000"	3112	4	3278	4	3260	4	2.263 lb	
2580	15	1530-Lite	1.500"	3.000"	18.000"	3112	4	3278	4	3260	4	3.295 lb	
2580-Black	15	1530-Lite-Black	1.500"	3.000"	18.000"	3112	4	3278	4	3260	4	3.295 lb	
2581	15	1530-Lite	1.500"	3.000"	24.000"	3112	4	3278	4	3260	4	4.327 lb	
2581-Black	15	1530-Lite-Black	1.500"	3.000"	24.000"	3112	4	3278	4	3260	4	4.327 lb	
2569	15	1530-S	1.500"	3.000"	6.000"	3112	4	3278	4	3260	4	1.429 lb	
2569-Black	15	1530-S-Black	1.500"	3.000"	6.000"	3112	4	3278	4	3260	4	1.429 lb	
2576	15	1530-S	1.500"	3.000"	12.000"	3112	4	3278	4	3260	4	2.658 lb	
2576-Black	15	1530-S-Black	1.500"	3.000"	12.000"	3112	4	3278	4	3260	4	2.658 lb	
2577	15	1530-S	1.500"	3.000"	18.000"	3112	4	3278	4	3260	4	3.887 lb	
2577-Black	15	1530-S-Black	1.500"	3.000"	18.000"	3112	4	3278	4	3260	4	3.887 lb	
2582	15	1530-S	1.500"	3.000"	24.000"	3112	4	3278	4	3260	4	5.117 lb	
2582-Black	15	1530-S-Black	1.500"	3.000"	24.000"	3112	4	3278	4	3260	4	5.117 lb	
2530	15	1530	1.500"	3.000"	6.000"	3112	4	3278	4	3260	4	1.021 lb	
2530-Black	15	1530-Black	1.500"	3.000"	6.000"	3112	4	3278	4	3260	4	1.021 lb	
2540	15	1530	1.500"	3.000"	12.000"	3112	4	3278	4	3260	4	2.707 lb	
2540-Black	15	1530-Black	1.500"	3.000"	12.000"	3112	4	3278	4	3260	4	2.707 lb	
2550	15	1530	1.500"	3.000"	18.000"	3112	4	3278	4	3260	4	3.961 lb	
2550-Black	15	1530-Black	1.500"	3.000"	18.000"	3112	4	3278	4	3260	4	3.961 lb	
2560	15	1530	1.500"	3.000"	24.000"	3112	4	3278	4	3260	4	5.215 lb	
2560-Black	15	1530-Black	1.500"	3.000"	24.000"	3112	4	3278	4	3260	4	5.215 lb	
2526	15	1545	1.500"	4.500"	6.000"	3112	6	3278	6	3260	6	1.495 lb	
2526-Black	15	1545-Black	1.500"	4.500"	6.000"	3112	6	3278	6	3260	6	1.495 lb	
2531	15	1545	1.500"	4.500"	12.000"	3112	6	3278	6	3260	6	3.199 lb	
2531-Black	15	1545-Black	1.500"	4.500"	12.000"	3112	6	3278	6	3260	6	3.199 lb	
2536	15	1545	1.500"	4.500"	18.000"	3112	6	3278	6	3260	6	6.203 lb	
2536-Black	15	1545-Black	1.500"	4.500"	18.000"	3112	6	3278	6	3260	6	6.203 lb	
2541	15	1545	1.500"	4.500"	24.000"	3112	6	3278	6	3260	6	8.171 lb	
2541-Black	15	1545-Black	1.500"	4.500"	24.000"	3112	6	3278	6	3260	6	8.171 lb	

View page 229 for dimensional drawing
CONTINUE

45 Degree Supports (Continued)

Part No.	Series	Profile	A	B	C	D (Included Hardware)						Weight	Product Representation (Length Will Vary)
						Bolt	Qty.	T-Nut	Qty.	Washer	Qty.		
20-2565	20	20-2020	20.00mm	20.00mm	160.00mm	11-5512	2	14122	2	11-6040	2	.0790 kg	
20-2565-Black	20	20-2020-Black	20.00mm	20.00mm	160.00mm	11-5512	2	14122	2	11-6040	2	.0790 kg	
20-2570	20	20-2020	20.00mm	20.00mm	320.00mm	11-5512	2	14122	2	11-6040	2	.1324 kg	
20-2570-Black	20	20-2020-Black	20.00mm	20.00mm	320.00mm	11-5512	2	14122	2	11-6040	2	.1324 kg	
20-2575	20	20-2020	20.00mm	20.00mm	480.00mm	11-5512	2	14122	2	11-6040	2	.2186 kg	
20-2575-Black	20	20-2020-Black	20.00mm	20.00mm	480.00mm	11-5512	2	14122	2	11-6040	2	.2186 kg	
20-2566	20	20-2040	20.00mm	40.00mm	160.00mm	11-5512	4	14122	4	11-6040	4	.1360 kg	
20-2566-Black	20	20-2040-Black	20.00mm	40.00mm	160.00mm	11-5512	4	14122	4	11-6040	4	.1360 kg	
20-2567	20	20-2040	20.00mm	40.00mm	320.00mm	11-5512	4	14122	4	11-6040	4	.2522 kg	
20-2567-Black	20	20-2040-Black	20.00mm	40.00mm	320.00mm	11-5512	4	14122	4	11-6040	4	.2522 kg	
20-2568	20	20-2040	20.00mm	40.00mm	480.00mm	11-5512	4	14122	4	11-6040	4	.3579 kg	
20-2568-Black	20	20-2040-Black	20.00mm	40.00mm	480.00mm	11-5512	4	14122	4	11-6040	4	.3579 kg	

Part No.	Series	Profile	A	B	C	D (Included Hardware)						Weight	Product Representation (Length Will Vary)
						Bolt	Qty.	T-Nut	Qty.	Washer	Qty.		
25-2565	25	25-2525	25.00mm	25.00mm	160.00mm	13-6512	2	3859	2	13-6045	2	.1173 kg	
25-2565-Black	25	25-2525-Black	25.00mm	25.00mm	160.00mm	13-6512	2	3859	2	13-6045	2	.1173 kg	
25-2570	25	25-2525	25.00mm	25.00mm	320.00mm	13-6512	2	3859	2	13-6045	2	.2312 kg	
25-2570-Black	25	25-2525-Black	25.00mm	25.00mm	320.00mm	13-6512	2	3859	2	13-6045	2	.2312 kg	
25-2575	25	25-2525	25.00mm	25.00mm	480.00mm	13-6512	2	3859	2	13-6045	2	.3274 kg	
25-2575-Black	25	25-2525-Black	25.00mm	25.00mm	480.00mm	13-6512	2	3859	2	13-6045	2	.3274 kg	
25-2566	25	25-2550	25.00mm	50.00mm	160.00mm	13-6512	4	3859	4	13-6045	4	.2045 kg	
25-2566-Black	25	25-2550-Black	25.00mm	50.00mm	160.00mm	13-6512	4	3859	4	13-6045	4	.2045 kg	
25-2567	25	25-2550	25.00mm	50.00mm	320.00mm	13-6512	4	3859	4	13-6045	4	.4150 kg	
25-2567-Black	25	25-2550-Black	25.00mm	50.00mm	320.00mm	13-6512	4	3859	4	13-6045	4	.4150 kg	
25-2568	25	25-2550	25.00mm	50.00mm	480.00mm	13-6512	4	3859	4	13-6045	4	.5775 kg	
25-2568-Black	25	25-2550-Black	25.00mm	50.00mm	480.00mm	13-6512	4	3859	4	13-6045	4	.5775 kg	

Part No.	Series	Profile	A	B	C	D (Included Hardware)						Weight	Product Representation (Length Will Vary)
						Bolt	Qty.	T-Nut	Qty.	Washer	Qty.		
30-2565	30	30-3030	30.00mm	30.00mm	160.00mm	11-8516	2	13025	2	11-6042	2	.1791 kg	
30-2565-Black	30	30-3030-Black	30.00mm	30.00mm	160.00mm	11-8516	2	13025	2	11-6042	2	.1791 kg	
30-2570	30	30-3030	30.00mm	30.00mm	320.00mm	11-8516	2	13025	2	11-6042	2	.3184 kg	
30-2570-Black	30	30-3030-Black	30.00mm	30.00mm	320.00mm	11-8516	2	13025	2	11-6042	2	.3184 kg	
30-2575	30	30-3030	30.00mm	30.00mm	480.00mm	11-8516	2	13025	2	11-6042	2	.4576 kg	
30-2575-Black	30	30-3030-Black	30.00mm	30.00mm	480.00mm	11-8516	2	13025	2	11-6042	2	.4576 kg	
30-2566	30	30-3060	30.00mm	60.00mm	160.00mm	11-8516	4	13025	4	11-6042	4	.1718 kg	
30-2566-Black	30	30-3060-Black	30.00mm	60.00mm	160.00mm	11-8516	4	13025	4	11-6042	4	.1718 kg	
30-2567	30	30-3060	30.00mm	60.00mm	320.00mm	11-8516	4	13025	4	11-6042	4	.5421 kg	
30-2567-Black	30	30-3060-Black	30.00mm	60.00mm	320.00mm	11-8516	4	13025	4	11-6042	4	.5421 kg	
30-2568	30	30-3060	30.00mm	60.00mm	480.00mm	11-8516	4	13025	4	11-6042	4	.8505 kg	
30-2568-Black	30	30-3060-Black	30.00mm	60.00mm	480.00mm	11-8516	4	13025	4	11-6042	4	.8505 kg	
30-2569	30	30-3060	30.00mm	60.00mm	640.00mm	11-8516	4	13025	4	11-6042	4	1.1075 kg	
30-2569-Black	30	30-3060-Black	30.00mm	60.00mm	640.00mm	11-8516	4	13025	4	11-6042	4	1.1075 kg	

View page 229 for dimensional drawing

CONTINUE

Part No.	Series	Profile	A	B	C	D (Included Hardware)						Weight	Product Representation (Length Will Vary)
						Bolt	Qty.	T-Nut	Qty.	Washer	Qty.		
40-2525	40	40-4040	40.00mm	40.00mm	160.00mm	13-8518	2	3838	2	13-6042	2	.3099 kg	
40-2525-Black	40	40-4040-Black	40.00mm	40.00mm	160.00mm	13-8518	2	3838	2	13-6042	2	.3099 kg	
40-2535	40	40-4040	40.00mm	40.00mm	320.00mm	13-8518	2	3838	2	13-6042	2	.7842 kg	
40-2535-Black	40	40-4040-Black	40.00mm	40.00mm	320.00mm	13-8518	2	3838	2	13-6042	2	.7842 kg	
40-2545	40	40-4040	40.00mm	40.00mm	480.00mm	13-8518	2	3838	2	13-6042	2	.8981 kg	
40-2545-Black	40	40-4040-Black	40.00mm	40.00mm	480.00mm	13-8518	2	3838	2	13-6042	2	.8981 kg	
40-2555	40	40-4040	40.00mm	40.00mm	640.00mm	13-8518	2	3838	2	13-6042	2	1.2165 kg	
40-2555-Black	40	40-4040-Black	40.00mm	40.00mm	640.00mm	13-8518	2	3838	2	13-6042	2	1.2165 kg	
40-2562	40	40-4040-Lite	40.00mm	40.00mm	160.00mm	13-8518	2	3838	2	13-6042	2	.2414 kg	
40-2562-Black	40	40-4040-Lite-Black	40.00mm	40.00mm	160.00mm	13-8518	2	3838	2	13-6042	2	.2414 kg	
40-2561	40	40-4040-Lite	40.00mm	40.00mm	320.00mm	13-8518	2	3838	2	13-6042	2	.5175 kg	
40-2561-Black	40	40-4040-Lite-Black	40.00mm	40.00mm	320.00mm	13-8518	2	3838	2	13-6042	2	.5175 kg	
40-2563	40	40-4040-Lite	40.00mm	40.00mm	480.00mm	13-8518	2	3838	2	13-6042	2	.9001 kg	
40-2563-Black	40	40-4040-Lite-Black	40.00mm	40.00mm	480.00mm	13-8518	2	3838	2	13-6042	2	.9001 kg	
40-2564	40	40-4040-Lite	40.00mm	40.00mm	640.00mm	13-8518	2	3838	2	13-6042	2	.8772 kg	
40-2564-Black	40	40-4040-Lite-Black	40.00mm	40.00mm	640.00mm	13-8518	2	3838	2	13-6042	2	.8772 kg	
40-2530	40	40-4080	40.00mm	80.00mm	160.00mm	13-8518	4	3838	4	13-6042	4	.7411 kg	
40-2530-Black	40	40-4080-Black	40.00mm	80.00mm	160.00mm	13-8518	4	3838	4	13-6042	4	.7411 kg	
40-2540	40	40-4080	40.00mm	80.00mm	320.00mm	13-8518	4	3838	4	13-6042	4	1.1910 kg	
40-2540-Black	40	40-4080-Black	40.00mm	80.00mm	320.00mm	13-8518	4	3838	4	13-6042	4	1.1910 kg	
40-2550	40	40-4080	40.00mm	80.00mm	480.00mm	13-8518	4	3838	4	13-6042	4	1.9075 kg	
40-2550-Black	40	40-4080-Black	40.00mm	80.00mm	480.00mm	13-8518	4	3838	4	13-6042	4	1.9075 kg	
40-2560	40	40-4080	40.00mm	80.00mm	640.00mm	13-8518	4	3838	4	13-6042	4	2.7006 kg	
40-2560-Black	40	40-4080-Black	40.00mm	80.00mm	640.00mm	13-8518	4	3838	4	13-6042	4	2.7006 kg	
40-2578	40	40-4080-Lite	40.00mm	80.00mm	160.00mm	13-8518	4	3838	4	13-6042	4	.5919 kg	
40-2578-Black	40	40-4080-Lite-Black	40.00mm	80.00mm	160.00mm	13-8518	4	3838	4	13-6042	4	.5919 kg	
40-2579	40	40-4080-Lite	40.00mm	80.00mm	320.00mm	13-8518	4	3838	4	13-6042	4	1.2491 kg	
40-2579-Black	40	40-4080-Lite-Black	40.00mm	80.00mm	320.00mm	13-8518	4	3838	4	13-6042	4	1.2491 kg	
40-2580	40	40-4080-Lite	40.00mm	80.00mm	480.00mm	13-8518	4	3838	4	13-6042	4	1.3580 kg	
40-2580-Black	40	40-4080-Lite-Black	40.00mm	80.00mm	480.00mm	13-8518	4	3838	4	13-6042	4	1.3580 kg	
40-2581	40	40-4080-Lite	40.00mm	80.00mm	640.00mm	13-8518	4	3838	4	13-6042	4	1.9590 kg	
40-2581-Black	40	40-4080-Lite-Black	40.00mm	80.00mm	640.00mm	13-8518	4	3838	4	13-6042	4	1.9590 kg	

View page 229 for dimensional drawing

CONTINUE

45 Degree Supports (Continued)

Part No.	Series	Profile	A	B	C	D (Included Hardware)						Weight	Product Representation (Length Will Vary)
						Bolt	Qty.	T-Nut	Qty.	Washer	Qty.		
45-2525	45	45-4545	45.00mm	45.00mm	160.00mm	11-8520	2	13049	2	11-6042	2	.2818 kg	
45-2525-Black	45	45-4545-Black	45.00mm	45.00mm	160.00mm	11-8520	2	13049	2	11-6042	2	.2818 kg	
45-2535	45	45-4545	45.00mm	45.00mm	320.00mm	11-8520	2	13049	2	11-6042	2	.7378 kg	
45-2535-Black	45	45-4545-Black	45.00mm	45.00mm	320.00mm	11-8520	2	13049	2	11-6042	2	.7378 kg	
45-2545	45	45-4545	45.00mm	45.00mm	480.00mm	11-8520	2	13049	2	11-6042	2	.7933 kg	
45-2545-Black	45	45-4545-Black	45.00mm	45.00mm	480.00mm	11-8520	2	13049	2	11-6042	2	.7933 kg	
45-2555	45	45-4545	45.00mm	45.00mm	640.00mm	11-8520	2	13049	2	11-6042	2	1.0358 kg	
45-2555-Black	45	45-4545-Black	45.00mm	45.00mm	640.00mm	11-8520	2	13049	2	11-6042	2	1.0358 kg	
45-2562	45	45-4545-Lite	45.00mm	45.00mm	160.00mm	11-8520	2	13049	2	11-6042	2	.4000 kg	
45-2562-Black	45	45-4545-Lite-Black	45.00mm	45.00mm	160.00mm	11-8520	2	13049	2	11-6042	2	.4000 kg	
45-2561	45	45-4545-Lite	45.00mm	45.00mm	320.00mm	11-8520	2	13049	2	11-6042	2	.4871 kg	
45-2561-Black	45	45-4545-Lite-Black	45.00mm	45.00mm	320.00mm	11-8520	2	13049	2	11-6042	2	.4871 kg	
45-2563	45	45-4545-Lite	45.00mm	45.00mm	480.00mm	11-8520	2	13049	2	11-6042	2	1.0677 kg	
45-2563-Black	45	45-4545-Lite-Black	45.00mm	45.00mm	480.00mm	11-8520	2	13049	2	11-6042	2	1.0677 kg	
45-2564	45	45-4545-Lite	45.00mm	45.00mm	640.00mm	11-8520	2	13049	2	11-6042	2	1.2820 kg	
45-2564-Black	45	45-4545-Lite-Black	45.00mm	45.00mm	640.00mm	11-8520	2	13049	2	11-6042	2	1.2820 kg	
45-2530	45	45-4590	45.00mm	90.00mm	160.00mm	11-8520	4	13049	4	11-6042	4	.7068 kg	
45-2530-Black	45	45-4590-Black	45.00mm	90.00mm	160.00mm	11-8520	4	13049	4	11-6042	4	.7068 kg	
45-2540	45	45-4590	45.00mm	90.00mm	320.00mm	11-8520	4	13049	4	11-6042	4	1.2820 kg	
45-2540-Black	45	45-4590-Black	45.00mm	90.00mm	320.00mm	11-8520	4	13049	4	11-6042	4	1.2820 kg	
45-2550	45	45-4590	45.00mm	90.00mm	480.00mm	11-8520	4	13049	4	11-6042	4	1.8572 kg	
45-2550-Black	45	45-4590-Black	45.00mm	90.00mm	480.00mm	11-8520	4	13049	4	11-6042	4	1.8572 kg	
45-2560	45	45-4590	45.00mm	90.00mm	640.00mm	11-8520	4	13049	4	11-6042	4	2.4324 kg	
45-2560-Black	45	45-4590-Black	45.00mm	90.00mm	640.00mm	11-8520	4	13049	4	11-6042	4	2.4324 kg	

View page 229 for dimensional drawing

Part Description:

The 2 hole - straight flat plate is an external fastening method that requires no machining services. It is a durable connection that can be easily repositioned and reused. This flat plate can provide infinite positioning along the profile T-slot, allowing for a large degree of adjustability. It engages the 2-degree drop-lock feature for most profile series when the assembly bolts are tightened to the required torque, creating a strong connection. **Tip:** Pre-load your hardware prior to connecting profiles to simplify your assembly and save time.

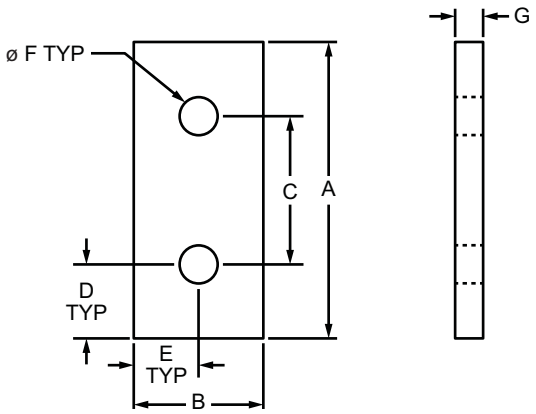

Part No.	Series	Material	Alloy*	Finish	A	B	C	D	E	F	G	Weight
4107	10	Aluminum	6105-T5	Clear Anodize	2.000"	.875"	1.000"	.500"	.438"	.257"	.188"	.029 lb
4107-Black	10			Black Anodize	2.000"	.875"	1.000"	.500"	.438"	.257"	.188"	.029 lb
4307	15			Clear Anodize	3.000"	1.490"	1.500"	.750"	.745"	.328"	.250"	.103 lb
4307-Black	15			Black Anodize	3.000"	1.490"	1.500"	.750"	.745"	.328"	.250"	.103 lb
20-4107	20			Clear Anodize	40.00mm	18.00mm	20.00mm	10.00mm	9.00mm	5.56mm	4.00mm	.0072 kg
20-4107-Black	20			Black Anodize	40.00mm	18.00mm	20.00mm	10.00mm	9.00mm	5.56mm	4.00mm	.0072 kg
25-4107	25			Clear Anodize	50.00mm	22.00mm	25.00mm	12.50mm	11.00mm	6.30mm	4.00mm	.0109 kg
25-4107-Black	25			Black Anodize	50.00mm	22.00mm	25.00mm	12.50mm	11.00mm	6.30mm	4.00mm	.0109 kg
30-4307	30			Clear Anodize	60.00mm	27.00mm	30.00mm	15.00mm	13.50mm	6.30mm	4.00mm	.0163 kg
30-4307-Black	30			Black Anodize	60.00mm	27.00mm	30.00mm	15.00mm	13.50mm	6.30mm	4.00mm	.0163 kg
40-4307	40			Clear Anodize	80.00mm	39.80mm	40.00mm	20.00mm	19.90mm	8.30mm	6.00mm	.0490 kg
40-4307-Black	40			Black Anodize	80.00mm	39.80mm	40.00mm	20.00mm	19.90mm	8.30mm	6.00mm	.0490 kg
45-4307	45			Clear Anodize	90.00mm	42.00mm	45.00mm	22.50mm	21.00mm	8.30mm	6.00mm	.0576 kg
45-4307-Black	45			Black Anodize	90.00mm	42.00mm	45.00mm	22.50mm	21.00mm	8.30mm	6.00mm	.0576 kg

* Or comparable

Suggested Hardware (Mount to T-Slot)

Part No.	Series	Qty.	Bolt	T-Nut
3321	10	2	1/4-20 x 1/2" FBHSCS	Economy
3320	15	2	5/16-18 x 11/16" FBHSCS	Economy
75-3656	20	2	M5 x 10mm BHSCS	Economy
75-3404	25	2	M6 x 10mm BHSCS	Economy
75-3600	30	2	M6 x 12mm BHSCS	Drop-in
75-3422	40	2	M8 x 16mm BHSCS	Economy
75-3619	45	2	M8 x 18mm BHSCS	Drop-in

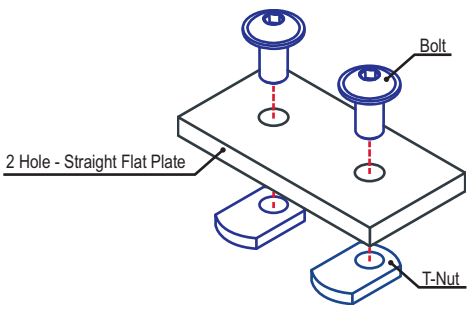

3 Hole - Straight Flat Plate

Part Description:

The 3 hole - straight flat plate is an external fastening method that requires no machining services. It is a durable connection that can be easily repositioned and reused. This flat plate can provide infinite positioning along the profile T-slot, allowing for a large degree of adjustability. It engages the 2-degree drop-lock feature for most profile series when the assembly bolts are tightened to the required torque, creating a strong connection. **Tip:** Use a double slide-in economy T-nut (pg. 366) to save time and money. Pre-load your hardware prior to connecting profiles to simplify your assembly.

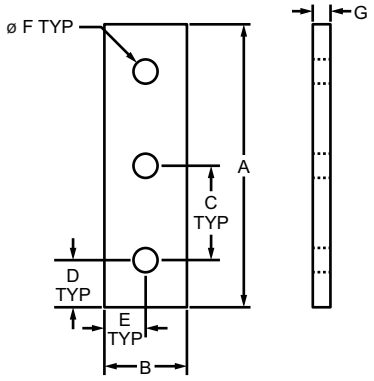

Part No.	Series	Material	Alloy*	Finish	A	B	C	D	E	F	G	Weight
4118	10	Aluminum	6105-T5	Clear Anodize	3.000"	.875"	1.000"	.500"	.438"	.257"	.188"	.044 lb
4118-Black	10			Black Anodize	3.000"	.875"	1.000"	.500"	.438"	.257"	.188"	.044 lb
4306	15			Clear Anodize	4.500"	1.490"	1.500"	.750"	.745"	.328"	.250"	.155 lb
4306-Black	15			Black Anodize	4.500"	1.490"	1.500"	.750"	.745"	.328"	.250"	.155 lb
20-4118	20			Clear Anodize	60.00mm	18.00mm	20.00mm	10.00mm	9.00mm	5.56mm	4.00mm	.0108 kg
20-4118-Black	20			Black Anodize	60.00mm	18.00mm	20.00mm	10.00mm	9.00mm	5.56mm	4.00mm	.0108 kg
25-4118	25			Clear Anodize	75.00mm	22.00mm	25.00mm	12.50mm	11.00mm	6.30mm	4.00mm	.0163 kg
25-4118-Black	25			Black Anodize	75.00mm	22.00mm	25.00mm	12.50mm	11.00mm	6.30mm	4.00mm	.0163 kg
30-4306	30			Clear Anodize	90.00mm	27.00mm	30.00mm	15.00mm	13.50mm	6.30mm	4.00mm	.0249 kg
30-4306-Black	30			Black Anodize	90.00mm	27.00mm	30.00mm	15.00mm	13.50mm	6.30mm	4.00mm	.0249 kg
40-4306	40			Clear Anodize	120.00mm	39.80mm	40.00mm	20.00mm	19.90mm	8.30mm	6.00mm	.0730 kg
40-4306-Black	40			Black Anodize	120.00mm	39.80mm	40.00mm	20.00mm	19.90mm	8.30mm	6.00mm	.0730 kg
45-4306	45			Clear Anodize	135.00mm	42.00mm	45.00mm	22.50mm	21.00mm	8.30mm	6.00mm	.0880 kg
45-4306-Black	45			Black Anodize	135.00mm	42.00mm	45.00mm	22.50mm	21.00mm	8.30mm	6.00mm	.0880 kg

* Or comparable

Suggested Hardware (Mount to T-Slot)

Part No.	Series	Qty.	Bolt	T-Nut
3321	10	3	1/4-20 x 1/2" FBHSCS	Economy
3320	15	3	5/16-18 x 11/16" FBHSCS	Economy
75-3656	20	3	M5 x 10mm BHSCS	Economy
75-3404	25	3	M6 x 10mm BHSCS	Economy
75-3600	30	3	M6 x 12mm BHSCS	Drop-in
75-3422	40	3	M8 x 16mm BHSCS	Economy
75-3619	45	3	M8 x 18mm BHSCS	Drop-in

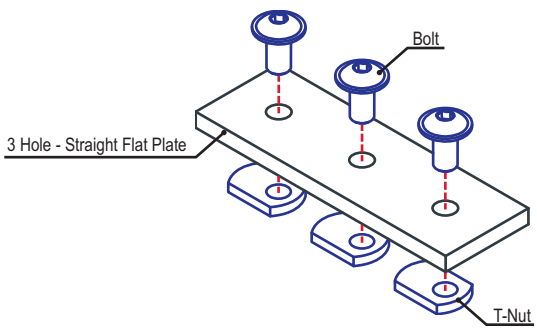

Part Description:

The 4 hole - straight flat plate is an external fastening method that requires no machining services. It is a durable connection that can be easily repositioned and reused. This flat plate can provide infinite positioning along the profile T-slot, allowing for a large degree of adjustability. It engages the 2-degree drop-lock feature when the assembly bolts are tightened to the required torque, creating a strong connection. **Tip:** Use double or triple slide-in economy T-nuts (pg. 366-367) to save time and money. Pre-load your hardware prior to connecting profiles to simplify your assembly.

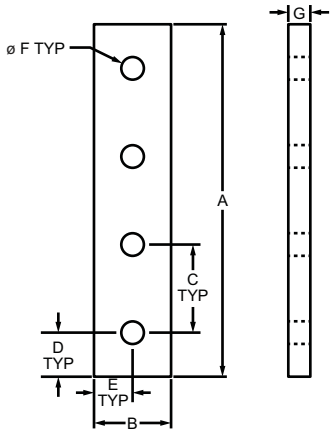

Part No.	Series	Material	Alloy*	Finish	A	B	C	D	E	F	G	Weight
4117	10	Aluminum	6105-T5	Clear Anodize	4.000"	.875"	1.000"	.500"	.438"	.257"	.188"	.058 lb
4117-Black	10			Black Anodize	4.000"	.875"	1.000"	.500"	.438"	.257"	.188"	.058 lb
4305	15			Clear Anodize	6.000"	1.490"	1.500"	.750"	.745"	.328"	.250"	.206 lb
4305-Black	15			Black Anodize	6.000"	1.490"	1.500"	.750"	.745"	.328"	.250"	.206 lb
20-4117	20			Clear Anodize	80.00mm	18.00mm	20.00mm	10.00mm	9.00mm	5.56mm	4.00mm	.0145 kg
20-4117-Black	20			Black Anodize	80.00mm	18.00mm	20.00mm	10.00mm	9.00mm	5.56mm	4.00mm	.0145 kg
25-4117	25			Clear Anodize	100.00mm	22.00mm	25.00mm	12.50mm	11.00mm	6.30mm	4.00mm	.0227 kg
25-4117-Black	25			Black Anodize	100.00mm	22.00mm	25.00mm	12.50mm	11.00mm	6.30mm	4.00mm	.0227 kg
30-4305	30			Clear Anodize	120.00mm	27.00mm	30.00mm	15.00mm	13.50mm	6.81mm	4.00mm	.0332 kg
30-4305-Black	30			Black Anodize	120.00mm	27.00mm	30.00mm	15.00mm	13.50mm	6.81mm	4.00mm	.0332 kg
40-4305	40			Clear Anodize	160.00mm	39.80mm	40.00mm	20.00mm	19.90mm	8.30mm	6.00mm	.0975 kg
40-4305-Black	40			Black Anodize	160.00mm	39.80mm	40.00mm	20.00mm	19.90mm	8.30mm	6.00mm	.0975 kg
45-4305	45			Clear Anodize	180.00mm	44.50mm	45.00mm	22.50mm	22.25mm	8.33mm	6.00mm	.1255 kg
45-4305-Black	45			Black Anodize	180.00mm	44.50mm	45.00mm	22.50mm	22.25mm	8.33mm	6.00mm	.1255 kg

* Or comparable

Suggested Hardware (Mount to T-Slot)

Part No.	Series	Qty.	Bolt	T-Nut
3321	10	4	1/4-20 x 1/2" FBHSCS	Economy
3320	15	4	5/16-18 x 11/16" FBHSCS	Economy
75-3656	20	4	M5 x 10mm BHSCS	Economy
75-3404	25	4	M6 x 10mm BHSCS	Economy
75-3600	30	4	M6 x 12mm BHSCS	Drop-in
75-3422	40	4	M8 x 16mm BHSCS	Economy
75-3619	45	4	M8 x 18mm BHSCS	Drop-in

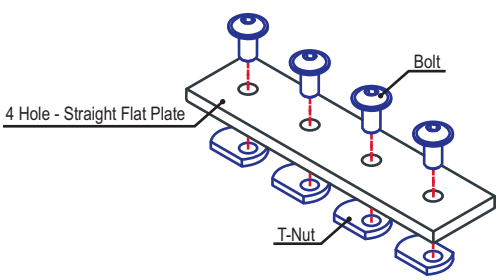

4 Hole - Square Flat Plate

Part Description:

The 4 hole - square flat plate is an external fastening method that requires no machining services. It is a durable connection that can be repositioned and reused. This connection can provide infinite positioning along the profile T-slot, allowing for a large degree of adjustability. The 4 hole - square flat plate engages the 2-degree drop-lock feature when the assembly bolts are tightened to the required torque, creating a strong connection. **Tip:** Use a double slide-in economy T-nut (pg. 366) to save time and money. Pre-load your hardware prior to connecting profiles to simplify your assembly.

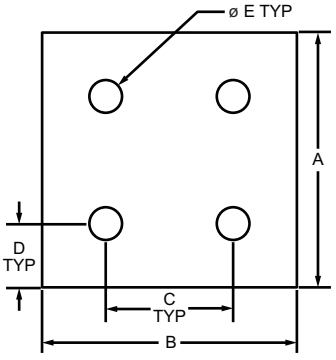

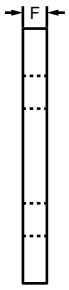

Part No.	Series	Material	Alloy*	Finish	A	B	C	D	E	F	Weight
4167	10	Aluminum	6105-T5	Clear Anodize	2.000"	2.000"	1.000"	.500"	.257"	.188"	.068 lb
4167-Black	10			Black Anodize	2.000"	2.000"	1.000"	.500"	.257"	.188"	.068 lb
4367	15			Clear Anodize	3.000"	3.000"	1.500"	.750"	.328"	.250"	.209 lb
4367-Black	15			Black Anodize	3.000"	3.000"	1.500"	.750"	.328"	.250"	.209 lb
20-4167	20			Clear Anodize	40.00mm	40.00mm	20.00mm	10.00mm	5.56mm	4.00mm	.0162 kg
20-4167-Black	20			Black Anodize	40.00mm	40.00mm	20.00mm	10.00mm	5.56mm	4.00mm	.0162 kg
25-4167	25			Clear Anodize	50.00mm	50.00mm	25.00mm	12.50mm	6.30mm	4.00mm	.0252 kg
25-4167-Black	25			Black Anodize	50.00mm	50.00mm	25.00mm	12.50mm	6.30mm	4.00mm	.0252 kg
30-4367	30			Clear Anodize	60.00mm	60.00mm	30.00mm	15.00mm	6.81mm	4.00mm	.0372 kg
30-4367-Black	30			Black Anodize	60.00mm	60.00mm	30.00mm	15.00mm	6.81mm	4.00mm	.0372 kg
40-4367	40			Clear Anodize	80.00mm	80.00mm	40.00mm	20.00mm	8.30mm	6.00mm	.0958 kg
40-4367-Black	40			Black Anodize	80.00mm	80.00mm	40.00mm	20.00mm	8.30mm	6.00mm	.0958 kg
45-4367	45			Clear Anodize	90.00mm	90.00mm	45.00mm	22.50mm	8.33mm	6.00mm	.1273 kg
45-4367-Black	45			Black Anodize	90.00mm	90.00mm	45.00mm	22.50mm	8.33mm	6.00mm	.1273 kg

* Or comparable

Suggested Hardware (Mount to T-Slot)

Part No.	Series	Qty.	Bolt	T-Nut
3321	10	4	1/4-20 x 1/2" FBHSCS	Economy
3320	15	4	5/16-18 x 11/16" FBHSCS	Economy
75-3656	20	4	M5 x 10mm BHSCS	Economy
75-3404	25	4	M6 x 10mm BHSCS	Economy
75-3600	30	4	M6 x 12mm BHSCS	Drop-in
75-3422	40	4	M8 x 16mm BHSCS	Economy
75-3619	45	4	M8 x 18mm BHSCS	Drop-in

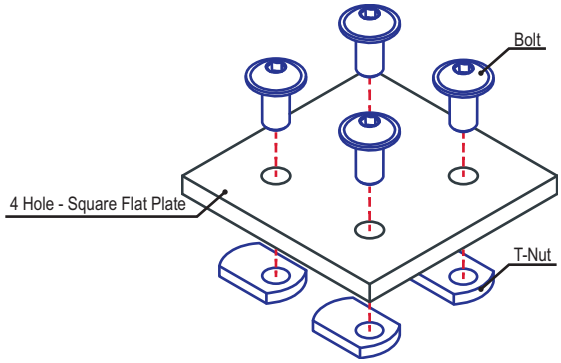

6 Hole - Rectangular Flat Plate

Part Description:

The 6 hole - rectangular flat plate is an external fastening method that requires no machining services. It is a durable connection that can be easily repositioned and reused. The flat plate can provide infinite positioning along the profile T-slot, enabling a large degree of adjustability. When the bolts are tightened to the required torque the 2-degree drop-lock feature is engaged, helping to ensure the strength of the connection. **Tip:** Use double or triple slide-in economy T-nuts (pg. 366-367) to save time and money. Pre-load your hardware prior to connecting profiles to simplify your assembly.

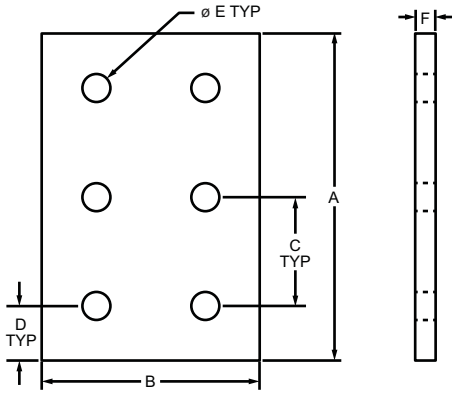

Part No.	Series	Material	Alloy*	Finish	A	B	C	D	E	F	Weight
4166	10	Aluminum	6105-T5	Clear Anodize	3.000"	2.000"	1.000"	.500"	.257"	.188"	.101 lb
4166-Black	10			Black Anodize	3.000"	2.000"	1.000"	.500"	.257"	.188"	.101 lb
4366	15			Clear Anodize	4.500"	3.000"	1.500"	.750"	.328"	.250"	.312 lb
4366-Black	15			Black Anodize	4.500"	3.000"	1.500"	.750"	.328"	.250"	.312 lb
20-4166	20			Clear Anodize	60.00mm	40.00mm	20.00mm	10.00mm	5.56mm	4.00mm	.0243 kg
20-4166-Black	20			Black Anodize	60.00mm	40.00mm	20.00mm	10.00mm	5.56mm	4.00mm	.0243 kg
25-4166	25			Clear Anodize	75.00mm	50.00mm	25.00mm	12.50mm	6.30mm	4.00mm	.0376 kg
25-4166-Black	25			Black Anodize	75.00mm	50.00mm	25.00mm	12.50mm	6.30mm	4.00mm	.0376 kg
30-4366	30			Clear Anodize	90.00mm	60.00mm	30.00mm	15.00mm	6.81mm	4.00mm	.0558 kg
30-4366-Black	30			Black Anodize	90.00mm	60.00mm	30.00mm	15.00mm	6.81mm	4.00mm	.0558 kg
40-4366	40			Clear Anodize	120.00mm	80.00mm	40.00mm	20.00mm	8.30mm	6.00mm	.1438 kg
40-4366-Black	40			Black Anodize	120.00mm	80.00mm	40.00mm	20.00mm	8.30mm	6.00mm	.1438 kg
45-4366	45			Clear Anodize	135.00mm	90.00mm	45.00mm	22.50mm	8.33mm	6.00mm	.1909 kg
45-4366-Black	45			Black Anodize	135.00mm	90.00mm	45.00mm	22.50mm	8.33mm	6.00mm	.1909 kg

* Or comparable

Suggested Hardware (Mount to T-Slot)

Part No.	Series	Qty.	Bolt	T-Nut
3321	10	6	1/4-20 x 1/2" FBHSCS	Economy
3320	15	6	5/16-18 x 11/16" FBHSCS	Economy
75-3656	20	6	M5 x 10mm BHSCS	Economy
75-3404	25	6	M6 x 10mm BHSCS	Economy
75-3600	30	6	M6 x 12mm BHSCS	Drop-in
75-3422	40	6	M8 x 16mm BHSCS	Economy
75-3619	45	6	M8 x 18mm BHSCS	Drop-in

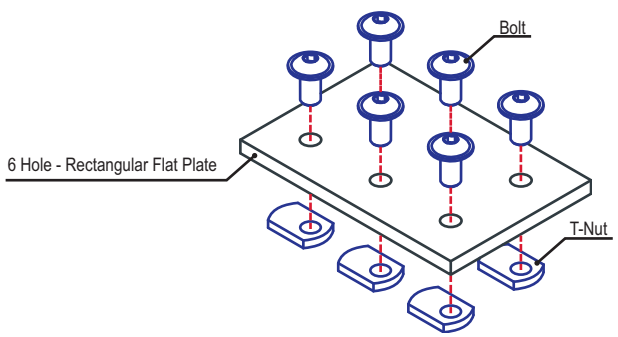

8 Hole - Rectangular Flat Plate

Part Description:

The 8 hole - rectangular flat plate is an external fastening method that requires no machining services. It is a durable connection that can be easily repositioned and reused. The flat plate can provide infinite positioning along the profile T-slot, enabling a large degree of adjustability. When the bolts are tightened to the required torque the 2-degree drop-lock feature is engaged, helping to ensure the strength of the connection. **Tip:** Use double or triple slide-in economy T-nuts (pg. 366-367) to save time and money. Pre-load your hardware prior to connecting profiles to simplify your assembly.

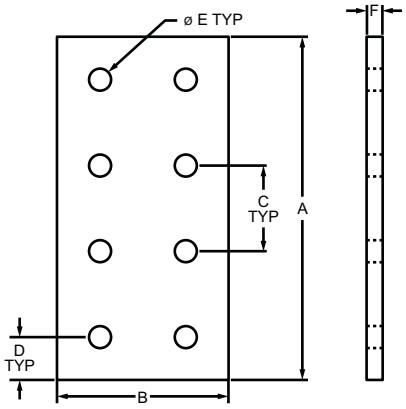

Part No.	Series	Material	Alloy*	Finish	A	B	C	D	E	F	Weight
4165	10	Aluminum	6105-T5	Clear Anodize	4.000"	2.000"	1.000"	.500"	.257"	.188"	.136 lb
4165-Black	10			Black Anodize	4.000"	2.000"	1.000"	.500"	.257"	.188"	.136 lb
4365	15			Clear Anodize	6.000"	3.000"	1.500"	.750"	.328"	.250"	.414 lb
4365-Black	15			Black Anodize	6.000"	3.000"	1.500"	.750"	.328"	.250"	.414 lb
20-4165	20			Clear Anodize	80.00mm	40.00mm	20.00mm	10.00mm	5.56mm	4.00mm	.0324 kg
20-4165-Black	20			Black Anodize	80.00mm	40.00mm	20.00mm	10.00mm	5.56mm	4.00mm	.0324 kg
25-4165	25			Clear Anodize	100.00mm	50.00mm	25.00mm	12.50mm	6.30mm	4.00mm	.0494 kg
25-4165-Black	25			Black Anodize	100.00mm	50.00mm	25.00mm	12.50mm	6.30mm	4.00mm	.0494 kg
30-4365	30			Clear Anodize	120.00mm	60.00mm	30.00mm	15.00mm	6.81mm	4.00mm	.0744 kg
30-4365-Black	30			Black Anodize	120.00mm	60.00mm	30.00mm	15.00mm	6.81mm	4.00mm	.0744 kg
40-4365	40			Clear Anodize	160.00mm	80.00mm	40.00mm	20.00mm	8.30mm	6.00mm	.1919 kg
40-4365-Black	40			Black Anodize	160.00mm	80.00mm	40.00mm	20.00mm	8.30mm	6.00mm	.1919 kg
45-4365	45			Clear Anodize	180.00mm	90.00mm	45.00mm	22.50mm	8.33mm	6.00mm	.2546 kg
45-4365-Black	45			Black Anodize	180.00mm	90.00mm	45.00mm	22.50mm	8.33mm	6.00mm	.2546 kg

* Or comparable

Suggested Hardware (Mount to T-Slot)

Part No.	Series	Qty.	Bolt	T-Nut
3321	10	8	1/4-20 x 1/2" FBHSCS	Economy
3320	15	8	5/16-18 x 11/16" FBHSCS	Economy
75-3656	20	8	M5 x 10mm BHSCS	Economy
75-3404	25	8	M6 x 10mm BHSCS	Economy
75-3600	30	8	M6 x 12mm BHSCS	Drop-in
75-3422	40	8	M8 x 16mm BHSCS	Economy
75-3619	45	8	M8 x 18mm BHSCS	Drop-in

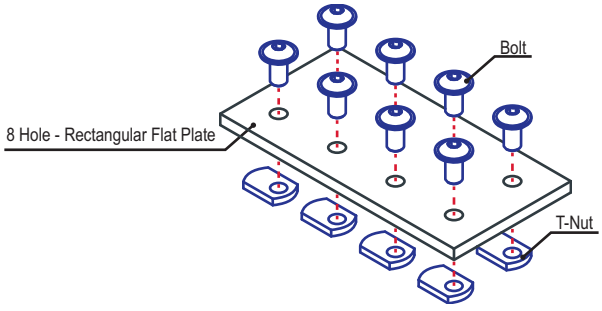

Part Description:

The 2 hole - straight transition flat plate connects profiles within the same product type (either fractional or metric) but of differing series. It is an external fastening method that requires no machining services. This option is reconfigurable and reusable and can provide infinite positioning along the profile T-slot, allowing for a large degree of adjustability. **Tip:** Pre-load your hardware prior to connecting profiles to simplify your assembly and save time.

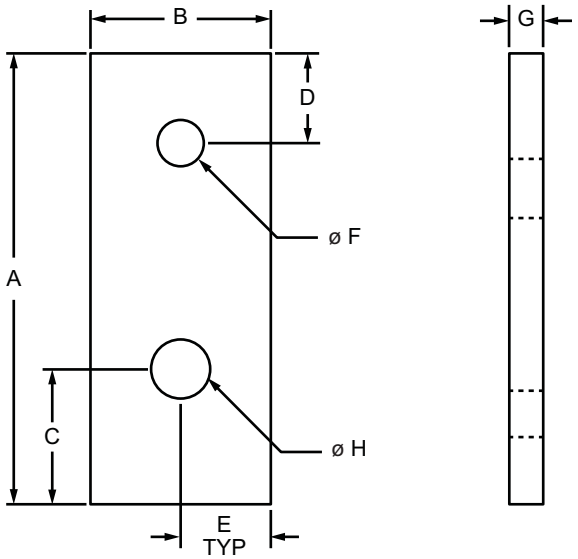

Part No.	Series	Material	Alloy*	Finish	A	B	C	D	E	F	G	H	Weight
4510	10 to 15	Aluminum	6105-T5	Clear Anodize	2.500"	1.000"	.750"	.500"	.500"	.257"	.188"	.328"	.043 lb
4510-Black	10 to 15			Black Anodize	2.500"	1.000"	.750"	.500"	.500"	.257"	.188"	.328"	.043 lb
65-4510	25 to 40			Clear Anodize	65.00mm	25.00mm	20.00mm	12.50mm	12.50mm	6.30mm	4.00mm	8.30mm	.0158 kg
65-4510-Black	25 to 40			Black Anodize	65.00mm	25.00mm	20.00mm	12.50mm	12.50mm	6.30mm	4.00mm	8.30mm	.0163 kg

* Or comparable

Suggested Hardware (Mount to T-Slot)

Part No.	Series	Qty.	Bolt	T-Nut
3321	10 to 15	1	1/4-20 x 1/2" FBHSCS	Economy
3435		1	5/16-18 x 5/8" BHSCS, Washer	Economy
75-3404	25 to 40	1	M6 x 10mm BHSCS	Economy
75-3422		1	M8 x 16mm BHSCS	Economy

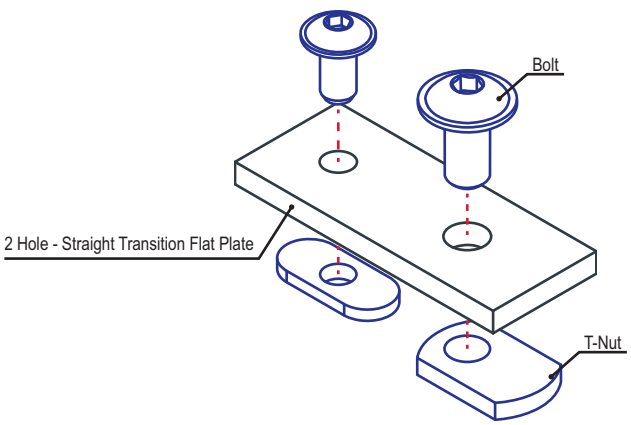

2 Hole - Straight Transition Flat Plate with Flush Offset

Part Description:

The 2 hole - straight transition flat plate with flush offset is an external fastening method that connects fractional profiles of differing series. The offset design creates a flush connection between the different sized profiles. It is a durable connection that is reconfigurable and reusable and can provide infinite positioning along the profile T-slot.
Tip: Pre-load your hardware prior to connecting profiles to simplify your assembly and save time.

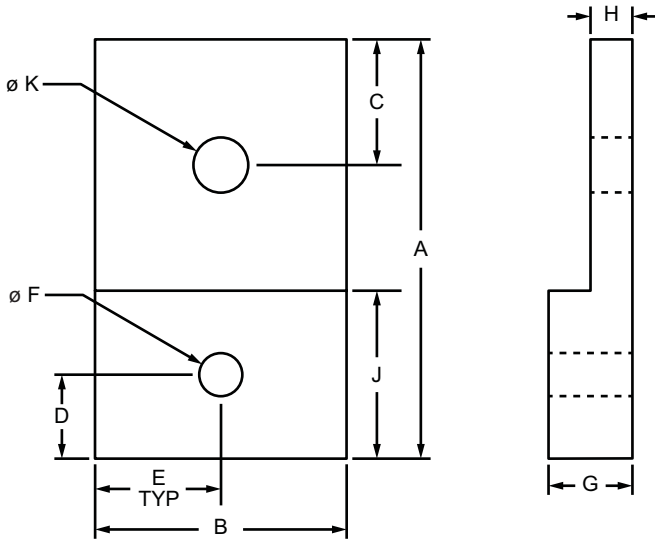

Part No.	Series	Material	Alloy*	Finish	A	B	C	D	E	F	G	H	J	K	Weight
4521	10 to 15	Aluminum	6105-T5	Clear Anodize	2.500"	1.500"	.750"	.500"	.750"	.257"	.500"	.250"	1.000"	.328"	.122 lb
4521-Black	10 to 15			Black Anodize	2.500"	1.500"	.750"	.500"	.750"	.257"	.500"	.250"	1.000"	.328"	.122 lb

* Or comparable

Suggested Hardware (Mount to T-Slot)

Part No.	Series	Qty.	Bolt	T-Nut
3384	10 to 15	1	1/4-20 x 3/4" FBHSCS	Economy
3320		1	5/16-18 x11/16" FBHSCS	Economy

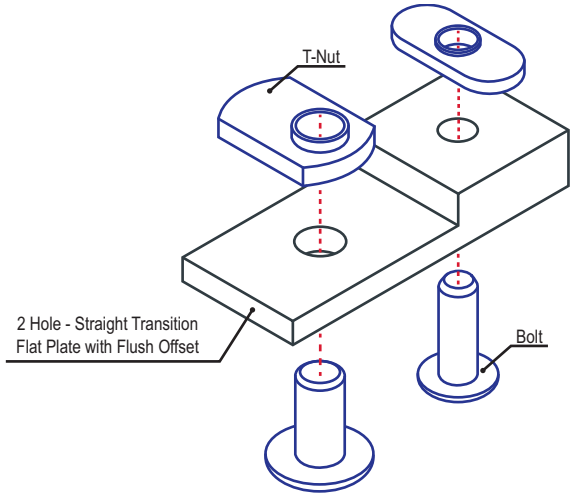

2 Hole - Straight Slotted Transition Flat Plate with Flush Offset

Part Description:

The 2 hole - straight slotted transition flat plate with flush offset is an external fastening method that connects fractional profiles of differing series. One of the bolt holes is slotted, as opposed to circular, to allow for an added degree of adjustability when lining up profiles. The offset design creates a flush connection between the different sized profiles. It is a durable connection that is reconfigurable and reusable and can provide infinite positioning along the profile T-slot. **Tip:** Pre-load your hardware prior to connecting profiles to simplify your assembly and save time.

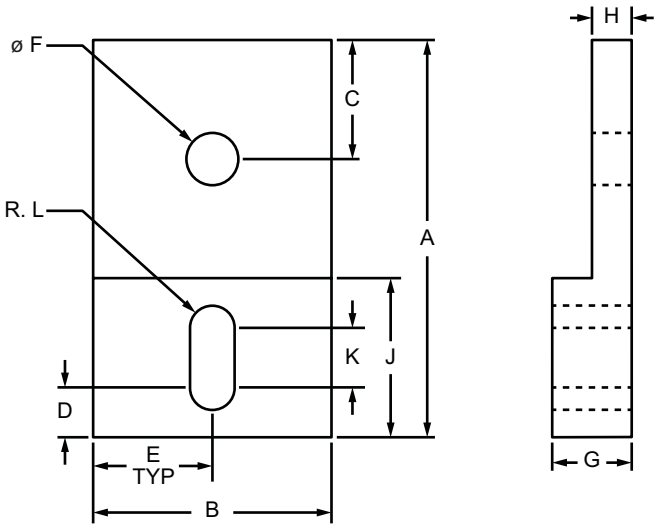

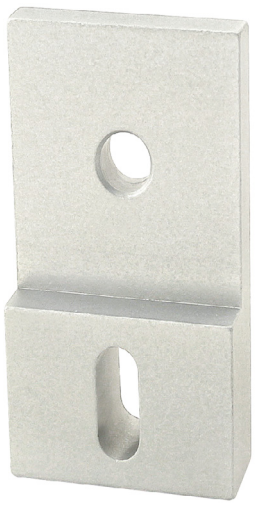

Part No.	Series	Material	Alloy*	Finish	A	B	C	D	E	F	G	H	J	K	L	Weight
4522	10 to 15	Aluminum	6105-T5	Clear Anodize	2.500"	1.500"	.750"	.312"	.750"	.328"	.500"	.250"	1.000"	.375"	.141"	.117 lb
4522-Black	10 to 15			Black Anodize	2.500"	1.500"	.750"	.312"	.750"	.328"	.500"	.250"	1.000"	.375"	.141"	.117 lb

* Or comparable

Suggested Hardware (Mount to T-Slot)

Part No.	Series	Qty.	Bolt	T-Nut
3384	10 to 15	1	1/4-20 x 3/4" FBHSCS	Economy
3320		1	5/16-18 x11/16" FBHSCS	Economy

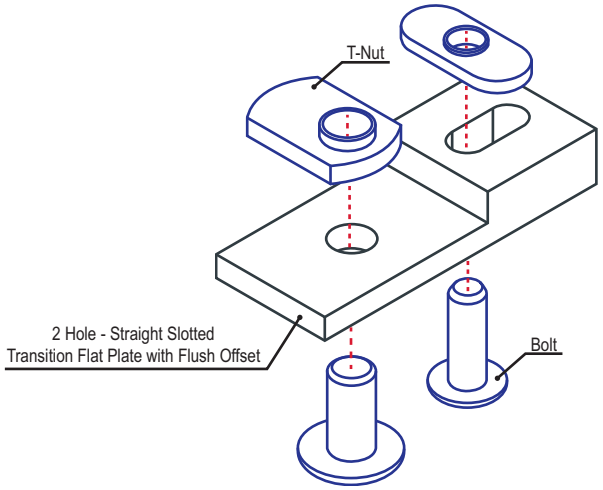

3 Hole - Straight Transition Flat Plate Small Series Primary

Part Description:

The 3 hole - straight transition flat plate small series primary connects profiles within the same product type (either fractional or metric) but of differing series. It is an external fastening method that requires no machining services. This option is reconfigurable and reusable and can provide infinite positioning along the profile T-slot, allowing for a large degree of adjustability. **Tip:** Use a double slide-in economy T-nut (pg. 366) to save time and money. Pre-load your hardware prior to connecting profiles to simplify your assembly.

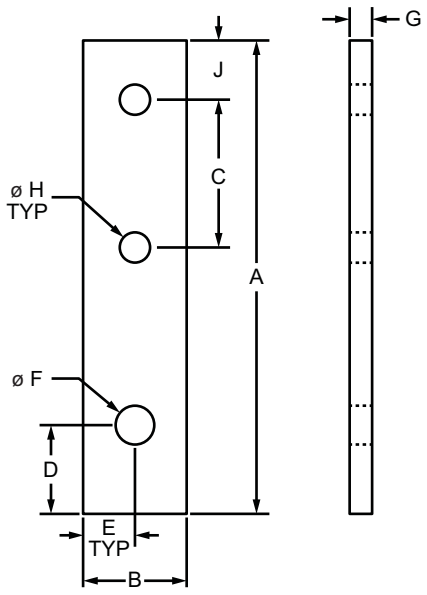

Part No.	Series	Material	Alloy*	Finish	A	B	C	D	E	F	G	H (Qty.)	J	Weight
4506	10 to 15	Aluminum	6105-T5	Clear Anodize	4.000"	.875"	1.250"	.750"	.438"	.328"	.250"	.257" (2)	.500"	.078 lb
4506-Black	10 to 15			Black Anodize	4.000"	.875"	1.250"	.750"	.438"	.328"	.250"	.257" (2)	.500"	.078 lb
65-4506	25 to 40			Clear Anodize	90.00mm	22.00mm	25.50mm	20.00mm	11.00mm	8.30mm	6.00mm	6.30mm (2)	12.00mm	.0290 kg
65-4506-Black	25 to 40			Black Anodize	90.00mm	22.00mm	25.50mm	20.00mm	11.00mm	8.30mm	6.00mm	6.30mm (2)	12.00mm	.0290 kg

* Or comparable

Suggested Hardware (Mount to T-Slot)

Part No.	Series	Qty.	Bolt	T-Nut
3321	10 to 15	2	1/4-20 x 1/2" FBHSCS	Economy
3320		1	5/16-18 x 11/16" FBHSCS	Economy
75-3405	25 to 40	2	M6 x 12mm BHSCS	Economy
75-3422		1	M8 x 16mm BHSCS	Economy

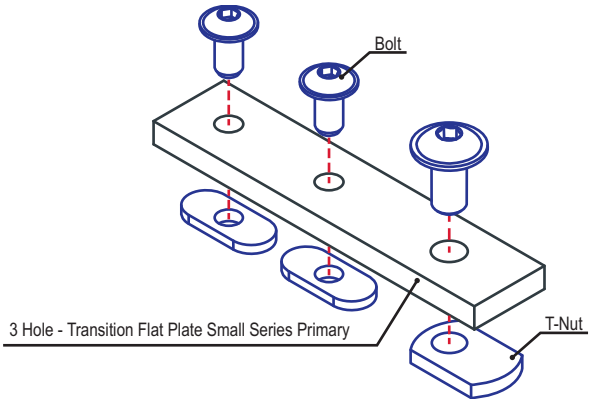

3 Hole - Straight Transition Flat Plate Large Series Primary

Part Description:

The 3 hole - straight transition flat plate large series primary connects profiles within the same product type (either fractional or metric) but of differing series. It is an external fastening method that requires no machining services. This option is reconfigurable and reusable and can provide infinite positioning along the profile T-slot, allowing for a large degree of adjustability. **Tip:** Use a double slide-in economy T-nut (pg. 366) to save time and money. Pre-load your hardware prior to connecting profiles to simplify your assembly.

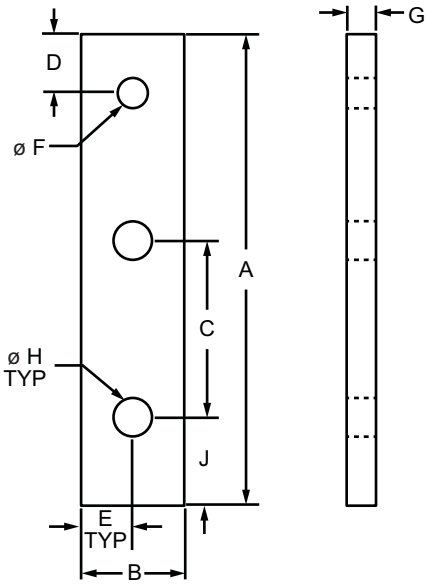

Part No.	Series	Material	Alloy*	Finish	A	B	C	D	E	F	G	H (Qty.)	J	Weight
4505	10 to 15	Aluminum	6105-T5	Clear Anodize	4.000"	.875"	1.500"	.500"	.438"	.257"	.250"	.328" (2)	.750"	.078 lb
4505-Black	10 to 15			Black Anodize	4.000"	.875"	1.500"	.500"	.438"	.257"	.250"	.328" (2)	.750"	.078 lb
65-4505	25 to 40			Clear Anodize	105.00mm	22.00mm	40.00mm	12.50mm	11.00mm	6.30mm	6.00mm	8.30mm (2)	20.00mm	.0331 kg
65-4505-Black	25 to 40			Black Anodize	105.00mm	22.00mm	40.00mm	12.50mm	11.00mm	6.30mm	6.00mm	8.30mm (2)	20.00mm	.0331 kg

* Or comparable

Suggested Hardware (Mount to T-Slot)

Part No.	Series	Qty.	Bolt	T-Nut
3321	10 to 15	1	1/4-20 x 1/2" FBHSCS	Economy
3320		2	5/16-18 x 11/16" FBHSCS	Economy
75-3405	25 to 40	1	M6 x 12mm BHSCS	Economy
75-3422		2	M8 x 16mm BHSCS	Economy

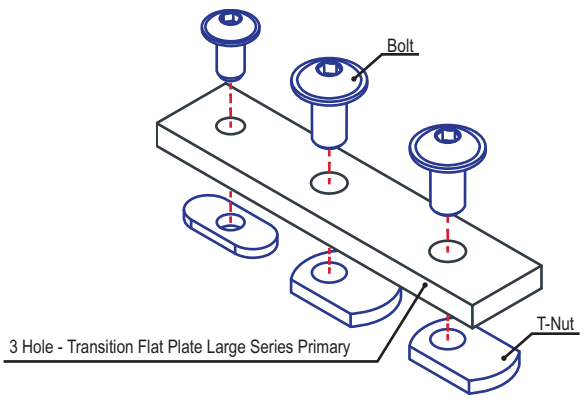

4 Hole - Straight Transition Flat Plate

Part Description:

The 4 hole - straight transition flat plate connects fractional profiles of differing series. It is an external fastening method that requires no machining services. This option is reconfigurable and reusable and can provide infinite positioning along the profile T-slot, allowing for a large degree of adjustability. **Tip:** Use a double slide-in economy T-nut (pg. 366) to save time and money. Pre-load your hardware prior to connecting profiles to simplify your assembly.

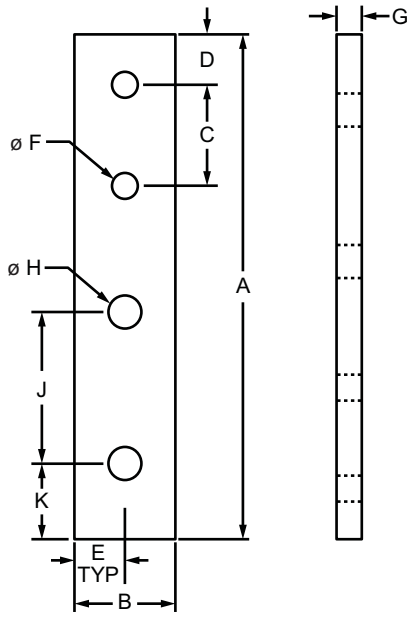

Part No.	Series	Material	Alloy*	Finish	A	B	C	D	E	F (Qty.)	G	H (Qty.)	J	K	Weight
4514	10 to 15	Aluminum	6105-T5	Clear Anodize	5.000"	1.000"	1.000"	.500"	.500"	.257" (2)	.250"	.328" (2)	1.500"	.750"	.114 lb
4514-Black	10 to 15			Black Anodize	5.000"	1.000"	1.000"	.500"	.500"	.257" (2)	.250"	.328" (2)	1.500"	.750"	.114 lb

* Or comparable

Suggested Hardware (Mount to T-Slot)

Part No.	Series	Qty.	Bolt	T-Nut
3321	10 to 15	2	1/4-20 x 1/2" FBHSCS	Economy
3320		2	5/16-18 x 11/16" FBHSCS	Economy

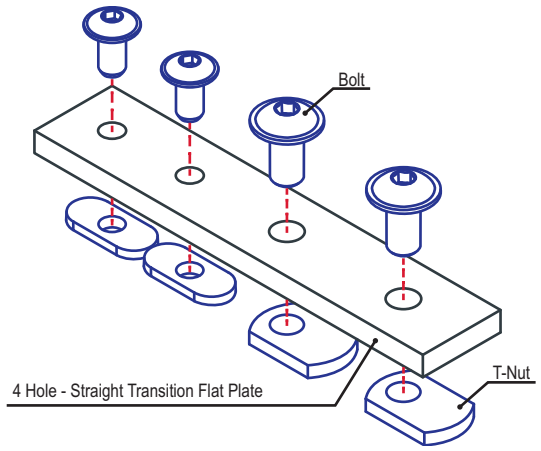

Part Description:

The 4 hole - rectangular transition flat plate connects fractional profiles of differing series. It is an external fastening method that requires no machining services. This option is reconfigurable and reusable and can provide infinite positioning along the profile T-slot, allowing for a large degree of adjustability. **Tip:** Use a double slide-in economy T-nut (pg. 366) to save time and money. Pre-load your hardware prior to connecting profiles to simplify your assembly.

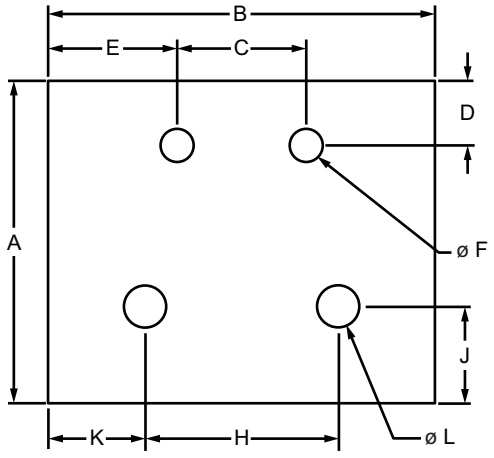

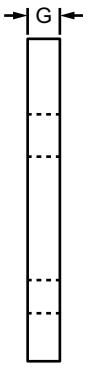

Part No.	Series	Material	Alloy*	Finish	A	B	C	D	E	F (Qty.)	G	H	J	K	L (Qty.)	Weight
4515	10 to 15	Aluminum	6105-T5	Clear Anodize	2.500"	3.000"	1.000"	.500"	1.000"	.257" (2)	.250"	1.500"	.750"	.750"	.328" (2)	.173 lb
4515-Black	10 to 15			Black Anodize	2.500"	3.000"	1.000"	.500"	1.000"	.257" (2)	.250"	1.500"	.750"	.750"	.328" (2)	.173 lb

* Or comparable

Suggested Hardware (Mount to T-Slot)

Part No.	Series	Qty.	Bolt	T-Nut
3321	10 to 15	2	1/4-20 x 1/2" FBHSCS	Economy
3320		2	5/16-18 x 11/16" FBHSCS	Economy

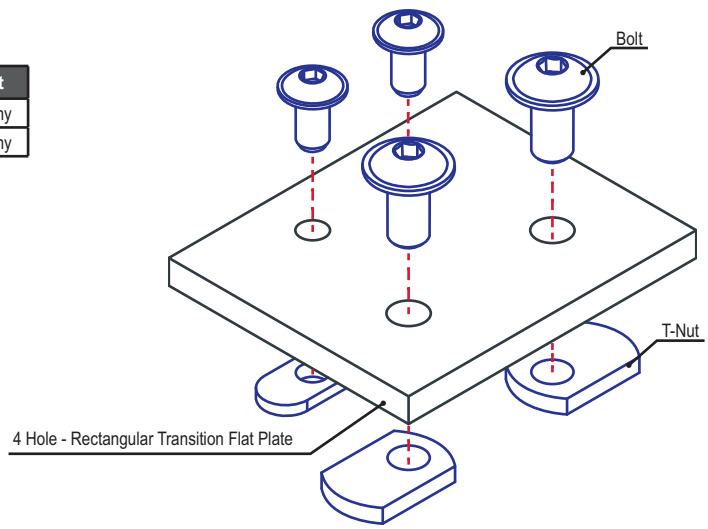

4 Hole - Rectangular Transition Flat Plate with Flush Offset

80/20® Inc.

Part Description:

The 4 hole - rectangular transition flat plate with flush offset is an external fastening method that connects fractional profiles of differing series. One of the bolt holes is slotted, as opposed to circular, to allow for an added degree of adjustability when lining up profiles. The offset design creates a flush connection between the different sized profiles. It is a durable connection that is reconfigurable and reusable and can provide infinite positioning along the profile T-slot. **Tip:** Use a double slide-in economy T-nut (pg. 366) to save time and money. Pre-load your hardware prior to connecting profiles to simplify your assembly.

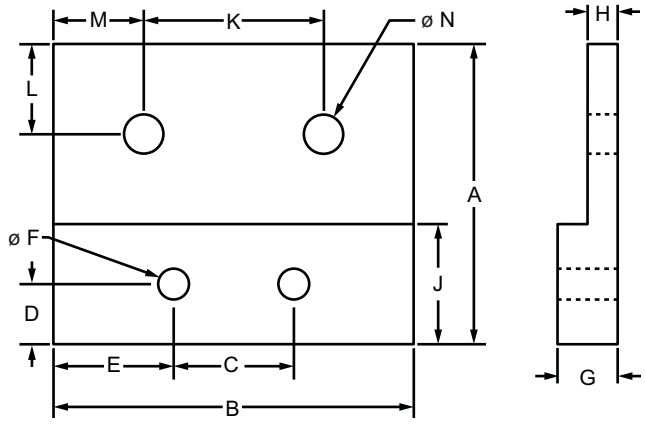

Part No.	Series	Color	A	B	C	D	E	F (Qty.)	G	H	J	K	L	M	N	Weight
4523	10 to 15	Clear	2.500"	3.000"	1.000"	.500"	1.000"	.257" (2)	.500"	.250"	1.000"	1.500"	.750"	.750"	.328"	.243 lb
4523-Black	10 to 15	Black	2.500"	3.000"	1.000"	.500"	1.000"	.257" (2)	.500"	.250"	1.000"	1.500"	.750"	.750"	.328"	.243 lb

Material Specifications

Material	Alloy*	Finish
Aluminum	6105-T5	Anodize

* Or comparable

Suggested Hardware (Mount to T-Slot)

Part No.	Series	Qty.	Bolt	T-Nut
3384	10 to 15	2	1/4-20 x 3/4" FBHSCS	Economy
3320		2	5/16-18 x 11/16" FBHSCS	Economy

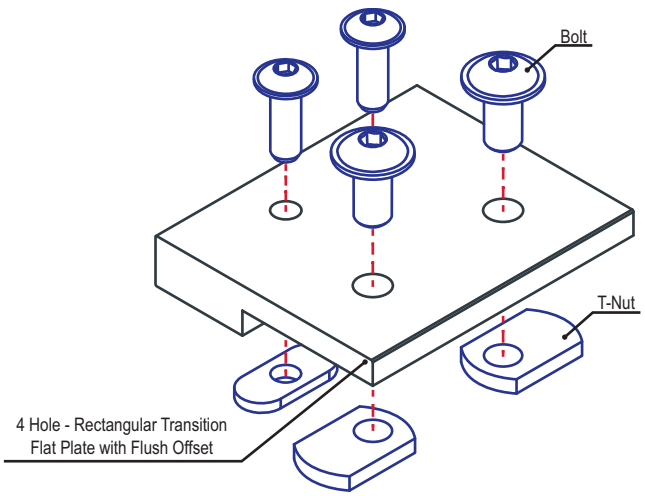

4 Hole - Rectangular Slotted Transition Flat Plate with Flush Offset

Part Description:

The 4 hole - rectangular slotted transition flat plate with flush offset is an external fastening method that connects fractional profiles of differing series. One of the bolt holes is slotted, as opposed to circular, to allow for an added degree of adjustability when lining up profiles. The offset design creates a flush connection between the different sized profiles. It is a durable connection that is reconfigurable and reusable and can provide infinite positioning along the profile T-slot. **Tip:** Use a double slide-in economy T-nut (pg. 366) to save time and money. Pre-load your hardware prior to connecting profiles to simplify your assembly.

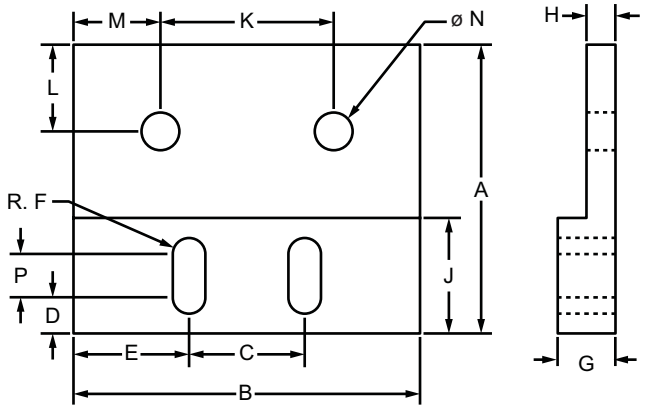

Part No.	Series	Color	A	B	C	D	E	F (Qty.)	G	H	J	K	L	M	N (Qty.)	P	Weight
4524	10 to 15	Clear	2.500"	3.000"	1.000"	.312"	1.000"	.141" (2)	.500"	.250"	1.000"	1.500"	.750"	.750"	.328" (2)	.375"	.239 lb
4524-Black	10 to 15	Black	2.500"	3.000"	1.000"	.312"	1.000"	.141" (2)	.500"	.250"	1.000"	1.500"	.750"	.750"	.328" (2)	.375"	.239 lb

Material Specifications

Material	Alloy*	Finish
Aluminum	6105-T5	Anodize

* Or comparable

Suggested Hardware (Mount to T-Slot)

Part No.	Series	Qty.	Bolt	T-Nut
3384	10 to 15	2	1/4-20 x 3/4" FBHSCS	Economy
3320		2	5/16-18 x 11/16" FBHSCS	Economy

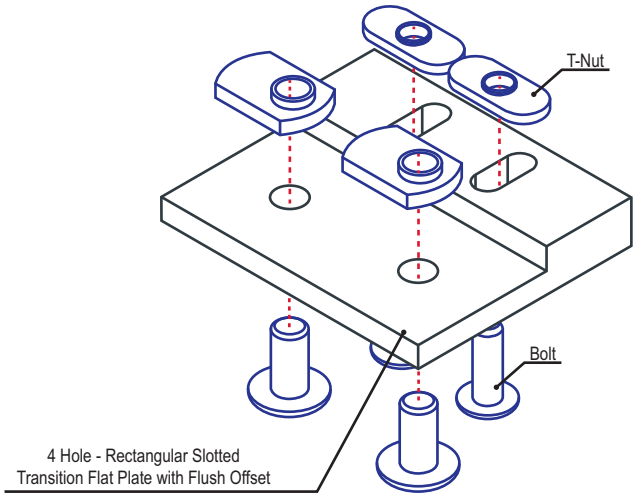

6 Hole - Rectangular Transition Flat Plate Small Series Primary

Part Description:

The 6 hole - rectangular transition flat plate small series primarily connects fractional profiles of differing series. It is an external fastening method that requires no machining services. This option is reconfigurable and reusable and can provide infinite positioning along the profile T-slot, allowing for a large degree of adjustability. **Tip:** Use a double slide-in economy T-nut (pg. 366) to save time and money. Pre-load your hardware prior to connecting profiles to simplify your assembly.

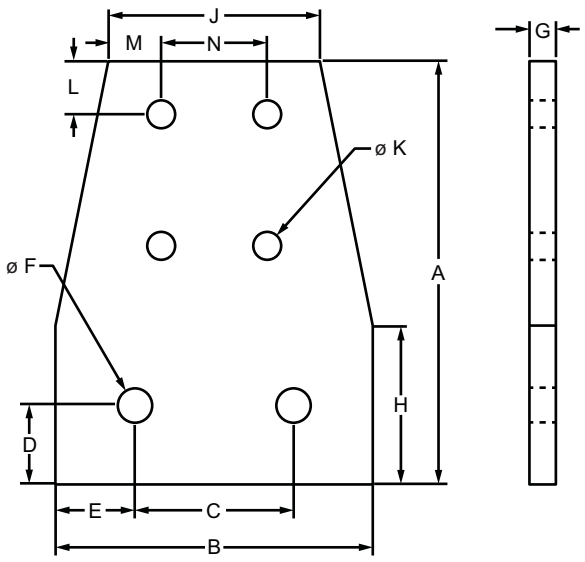

Part No.	Series	Color	A	B	C	D	E	F (Qty.)	G	H	J	K (Qty.)	L	M	N	Weight
4519	10 to 15	Clear	4.000"	3.000"	1.500"	.750"	.750"	.328" (2)	.250"	1.500"	2.000"	.257" (4)	.500"	.500"	1.000"	.250 lb
4519-Black	10 to 15	Black	4.000"	3.000"	1.500"	.750"	.750"	.328" (2)	.250"	1.500"	2.000"	.257" (4)	.500"	.500"	1.000"	.250 lb

Material Specifications

Material	Alloy*	Finish
Aluminum	6105-T5	Anodize

* Or comparable

Suggested Hardware (Mount to T-Slot)

Part No.	Series	Qty.	Bolt	T-Nut
3321	10 to 15	4	1/4-20 x 1/2" FBHSCS	Economy
3320		2	5/16-18 x 11/16" FBHSCS	Economy

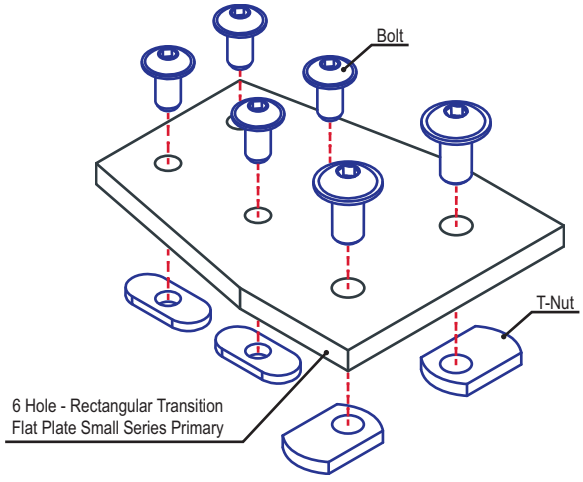

6 Hole - Rectangular Transition Flat Plate Large Series Primary

Part Description:

The 6 hole - rectangular transition flat plate large series primarily connects fractional profiles of differing series. It is an external fastening method that requires no machining services. This option is reconfigurable and reusable and can provide infinite positioning along the profile T-slot, allowing for a large degree of adjustability. **Tip:** Use a double slide-in economy T-nut (pg. 366) to save time and money. Pre-load your hardware prior to connecting profiles to simplify your assembly.

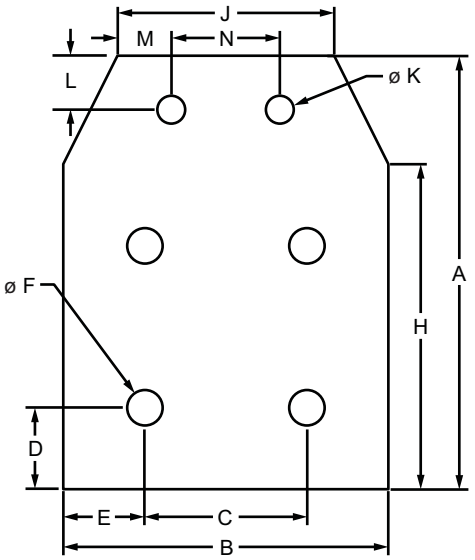

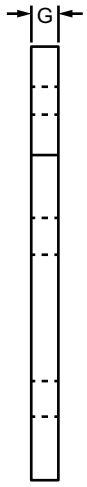

Part No.	Series	Color	A	B	C	D	E	F (Qty.)	G	H	J	K (Qty.)	L	M	N	Weight
4520	10 to 15	Clear	4.000"	3.000"	1.500"	.750"	.750"	.328" (4)	.250"	3.000"	2.000"	.257" (2)	.500"	.500"	1.000"	.264 lb
4520-Black	10 to 15	Black	4.000"	3.000"	1.500"	.750"	.750"	.328" (4)	.250"	3.000"	2.000"	.257" (2)	.500"	.500"	1.000"	.264 lb

Material Specifications

Material	Alloy*	Finish
Aluminum	6105-T5	Anodize

* Or comparable

Suggested Hardware (Mount to T-Slot)

Part No.	Series	Qty.	Bolt	T-Nut
3321	10 to 15	2	1/4-20 x 1/2" FBHSCS	Economy
3320		4	5/16-18 x 11/16" FBHSCS	Economy

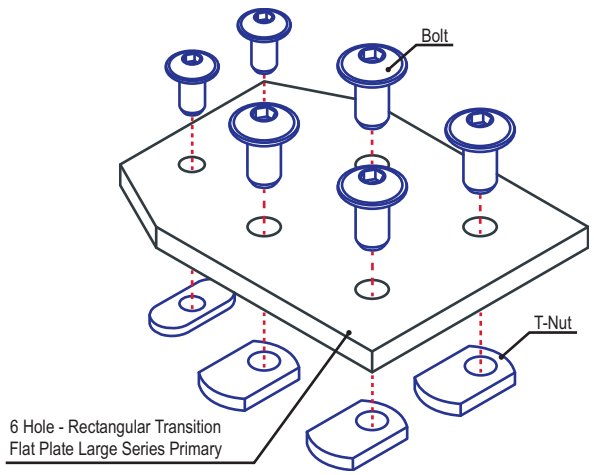

8 Hole - Rectangular Transition Flat Plate

Part Description:

The 8 hole - rectangular transition flat plate connects fractional profiles of differing series. It is an external fastening method that requires no machining services. This option is reconfigurable and reusable and can provide infinite positioning along the profile T-slot, allowing for a large degree of adjustability. **Tip:** Use a double slide-in economy T-nut (pg. 366) to save time and money. Pre-load your hardware prior to connecting profiles to simplify your assembly.

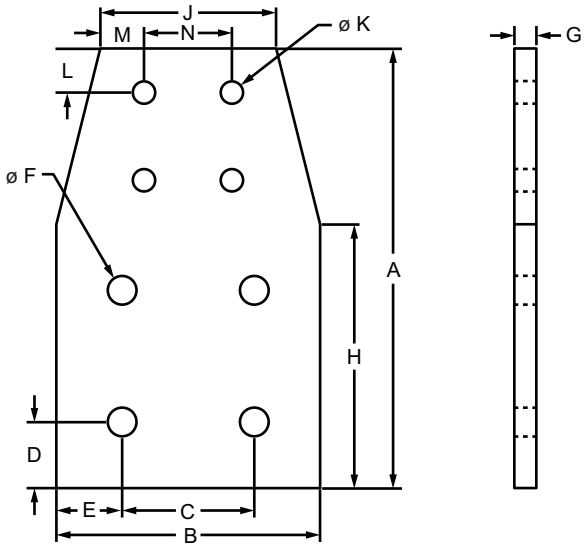

Part No.	Series	Color	A	B	C	D	E	F (Qty.)	G	H	J	K (Qty.)	L	M	N	Weight
4518	10 to 15	Clear	5.000"	3.000"	1.500"	.750"	.750"	.328" (4)	.250"	3.000"	2.000"	.257" (4)	.500"	.500"	1.000"	.327 lb
4518-Black	10 to 15	Black	5.000"	3.000"	1.500"	.750"	.750"	.328" (4)	.250"	3.000"	2.000"	.257" (4)	.500"	.500"	1.000"	.327 lb

Material Specifications

Material	Alloy*	Finish
Aluminum	6105-T5	Anodize

* Or comparable

Suggested Hardware (Mount to T-Slot)

Part No.	Series	Qty.	Bolt	T-Nut
3321	10 to 15	4	1/4-20 x 1/2" FBHSCS	Economy
3320		4	5/16-18 x 11/16" FBHSCS	Economy

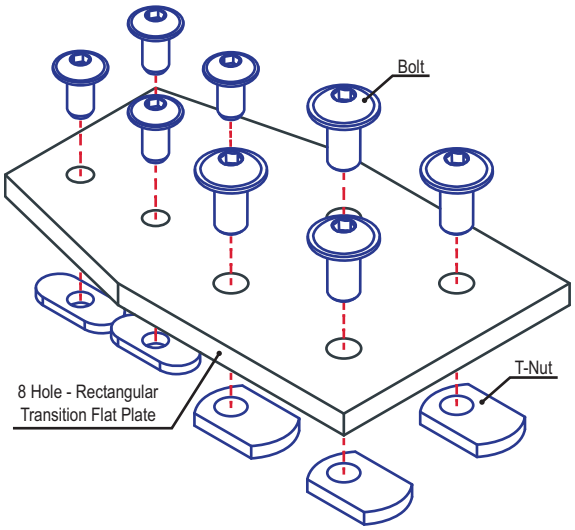

Part Description:

The 4 hole - 90 degree angled flat plate is an external fastening method that requires no machining services. This flat plate creates a 90 degree angle between profiles and its shape reinforces the strength of the connection. It is a durable option that is easy to assemble and can be reconfigured and reused. **Tip:** Use double or triple slide-in economy T-nuts (pg. 366-367) to save time and money. Pre-load your hardware prior to connecting profiles to simplify your assembly.

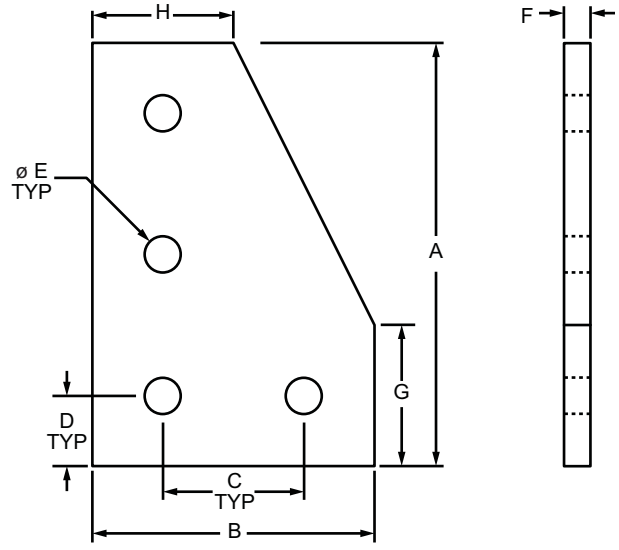

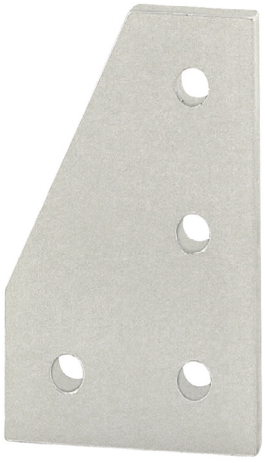

Part No.	Series	Material	Alloy*	Finish	A	B	C	D	E	F	G	H	Weight
4150	10	Aluminum	6105-T5	Clear Anodize	3.000"	2.000"	1.000"	.500"	.257"	.188"	1.000"	1.000"	.087 lb
4150-Black	10			Black Anodize	3.000"	2.000"	1.000"	.500"	.257"	.188"	1.000"	1.000"	.087 lb
4350	15			Clear Anodize	4.500"	3.000"	1.500"	.750"	.328"	.250"	1.500"	1.500"	.264 lb
4350-Black	15			Black Anodize	4.500"	3.000"	1.500"	.750"	.328"	.250"	1.500"	1.500"	.264 lb
25-4150	25			Clear Anodize	75.00mm	50.00mm	25.00mm	12.50mm	6.20mm	4.00mm	25.00mm	25.00mm	.0318 kg
25-4150-Black	25			Black Anodize	75.00mm	50.00mm	25.00mm	12.50mm	6.20mm	4.00mm	25.00mm	25.00mm	.0318 kg
40-4350	40			Clear Anodize	120.00mm	80.00mm	40.00mm	20.00mm	8.30mm	6.00mm	40.00mm	40.00mm	.1207 kg
40-4350-Black	40			Black Anodize	120.00mm	80.00mm	40.00mm	20.00mm	8.30mm	6.00mm	40.00mm	40.00mm	.1207 kg

* Or comparable

Suggested Hardware (Mount to T-Slot)

Part No.	Series	Qty.	Bolt	T-Nut
3321	10	4	1/4-20 x 1/2" FBHSCS	Economy
3320	15	4	5/16-18 x 11/16" FBHSCS	Economy
75-3404	25	4	M6 x 10mm BHSCS	Economy
75-3422	40	4	M8 x 16mm BHSCS	Economy

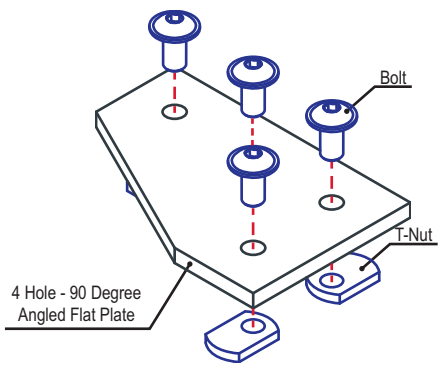

5 Hole - 90 Degree Angled Flat Plate

Part Description:

The 5 hole - 90 degree angled flat plate is an external fastening method that requires no machining services. This flat plate creates a 90 degree angle between profiles and its shape reinforces the strength of the connection. It is a durable option that is easy to assemble and can be reconfigured and reused. **Tip:** Use double or triple slide-in economy T-nuts (pg. 366-367) to save time and money. Pre-load your hardware prior to connecting profiles to simplify your assembly.

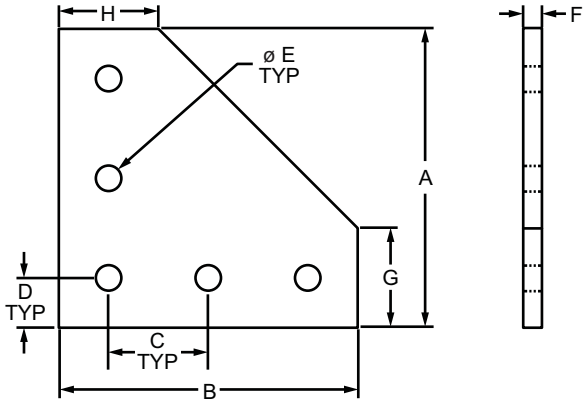

Part No.	Series	Material	Alloy*	Finish	A	B	C	D	E	F	G	H	Weight
4151	10	Aluminum	6105-T5	Clear Anodize	3.000"	3.000"	1.000"	.500"	.257"	.188"	1.000"	1.000"	.119 lb
4151-Black	10			Black Anodize	3.000"	3.000"	1.000"	.500"	.257"	.188"	1.000"	1.000"	.119 lb
4351	15			Clear Anodize	4.500"	4.500"	1.500"	.750"	.328"	.250"	1.500"	1.500"	.363 lb
4351-Black	15			Black Anodize	4.500"	4.500"	1.500"	.750"	.328"	.250"	1.500"	1.500"	.363 lb
25-4151	25			Clear Anodize	75.00mm	75.00mm	25.00mm	12.50mm	6.30mm	4.00mm	25.00mm	25.00mm	.0454 kg
25-4151-Black	25			Black Anodize	75.00mm	75.00mm	25.00mm	12.50mm	6.30mm	4.00mm	25.00mm	25.00mm	.0454 kg
30-4351	30			Clear Anodize	90.00mm	90.00mm	30.00mm	15.00mm	6.30mm	4.00mm	30.00mm	30.00mm	.0644 kg
30-4351-Black	30			Black Anodize	90.00mm	90.00mm	30.00mm	15.00mm	6.30mm	4.00mm	30.00mm	30.00mm	.0644 kg
40-4351	40			Clear Anodize	120.00mm	120.00mm	40.00mm	20.00mm	8.30mm	6.00mm	40.00mm	40.00mm	.1719 kg
40-4351-Black	40			Black Anodize	120.00mm	120.00mm	40.00mm	20.00mm	8.30mm	6.00mm	40.00mm	40.00mm	.1719 kg
45-4351	45			Clear Anodize	135.00mm	135.00mm	45.00mm	22.50mm	8.30mm	6.00mm	45.00mm	45.00mm	.2214 kg
45-4351-Black	45			Black Anodize	135.00mm	135.00mm	45.00mm	22.50mm	8.30mm	6.00mm	45.00mm	45.00mm	.2214 kg

* Or comparable

Suggested Hardware (Mount to T-Slot)

Part No.	Series	Qty.	Bolt	T-Nut
3321	10	5	1/4-20 x 1/2" FBHSCS	Economy
3320	15	5	5/16-18 x 11/16" FBHSCS	Economy
75-3404	25	5	M6 x 10mm BHSCS	Economy
75-3600	30	5	M6 x 12mm BHSCS	Drop-In
75-3422	40	5	M8 x 16mm BHSCS	Economy
75-3619	45	5	M8 x 18mm BHSCS	Drop-In

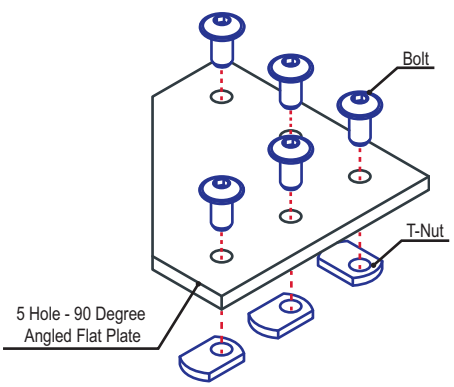

6 Hole - 90 Degree Angled Stacked Flat Plate

Part Description:

The 6 hole - 90 degree angled stacked flat plate is an external fastening method that requires no machining services. This flat plate creates a 90 degree angle between profiles and its shape reinforces the strength of the connection. It is a durable option that is easy to assemble and can be reconfigured and reused. **Tip:** Use double or triple slide-in economy T-nuts (pg. 366-367) to save time and money. Pre-load your hardware prior to connecting profiles to simplify your assembly.

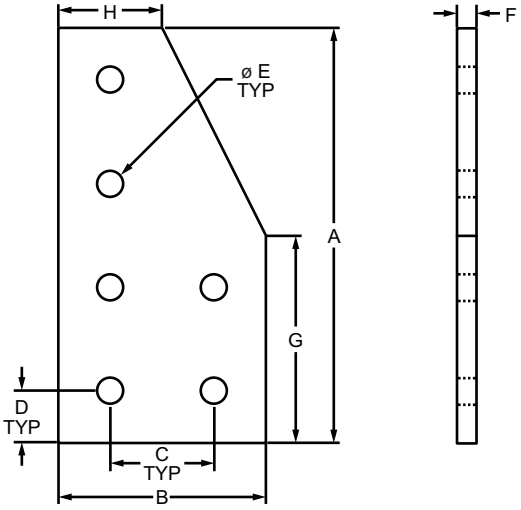

Part No.	Series	Material	Alloy*	Finish	A	B	C	D	E	F	G	H	Weight
4120	10	Aluminum	6105-T5	Clear Anodize	4.000"	2.000"	1.000"	.500"	.257"	.188"	2.000"	1.000"	.121 lb
4120-Black	10			Black Anodize	4.000"	2.000"	1.000"	.500"	.257"	.188"	2.000"	1.000"	.121 lb
4320	15			Clear Anodize	6.000"	3.000"	1.500"	.750"	.328"	.250"	3.000"	1.500"	.444 lb
4320-Black	15			Black Anodize	6.000"	3.000"	1.500"	.750"	.328"	.250"	3.000"	1.500"	.444 lb
25-4120	25			Clear Anodize	100.00mm	50.00mm	25.00mm	12.50mm	6.30mm	4.00mm	50.00mm	25.00mm	.0440 kg
25-4120-Black	25			Black Anodize	100.00mm	50.00mm	25.00mm	12.50mm	6.30mm	4.00mm	50.00mm	25.00mm	.0440 kg
40-4320	40			Clear Anodize	160.00mm	80.00mm	40.00mm	20.00mm	8.30mm	6.00mm	80.00mm	40.00mm	.1696 kg
40-4320-Black	40			Black Anodize	160.00mm	80.00mm	40.00mm	20.00mm	8.30mm	6.00mm	80.00mm	40.00mm	.1696 kg

* Or comparable

Suggested Hardware (Mount to T-Slot)

Part No.	Series	Qty.	Bolt	T-Nut
3321	10	6	1/4-20 x 1/2" FBHSCS	Economy
3320	15	6	5/16-18 x 11/16" FBHSCS	Economy
75-3404	25	6	M6 x 10mm BHSCS	Economy
75-3422	40	6	M8 x 16mm BHSCS	Economy

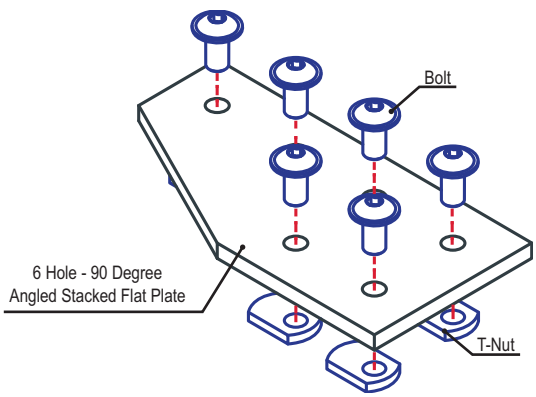

6 Hole - 90 Degree Angled Squared Flat Plate

Part Description:

The 6 hole - 90 degree angled squared flat plate is an external fastening method that requires no machining services. This flat plate creates a 90 degree angle between profiles and its shape reinforces the strength of the connection. It is a durable option that is easy to assemble and can be reconfigured and reused. **Tip:** Use double or triple slide-in economy T-nuts (pg. 366-367) to save time and money. Pre-load your hardware prior to connecting profiles to simplify your assembly.

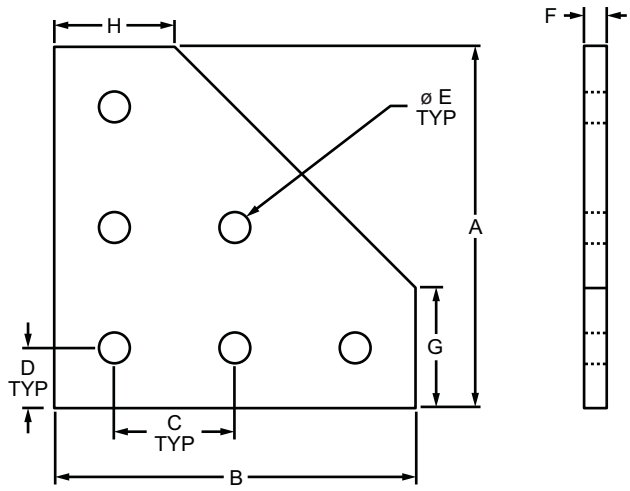

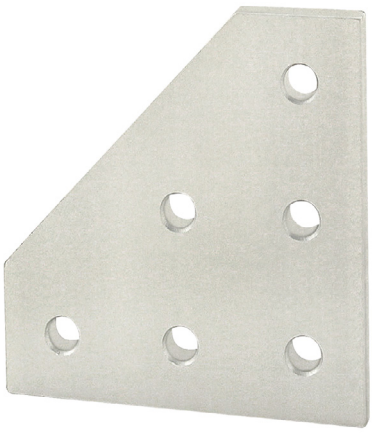

Part No.	Series	Material	Alloy*	Finish	A	B	C	D	E	F	G	H	Weight
4061	10	Aluminum	6105-T5	Clear Anodize	3.000"	3.000"	1.000"	.500"	.257"	.188"	1.000"	1.000"	.117 lb
4061-Black	10			Black Anodize	3.000"	3.000"	1.000"	.500"	.257"	.188"	1.000"	1.000"	.117 lb
4461	15			Clear Anodize	4.500"	4.500"	1.500"	.750"	.328"	.250"	1.500"	1.500"	.361 lb
4461-Black	15			Black Anodize	4.500"	4.500"	1.500"	.750"	.328"	.250"	1.500"	1.500"	.361 lb

* Or comparable

Suggested Hardware (Mount to T-Slot)

Part No.	Series	Qty.	Bolt	T-Nut
3321	10	6	1/4-20 x 1/2" FBHSCS	Economy
3320	15	6	5/16-18 x 11/16" FBHSCS	Economy

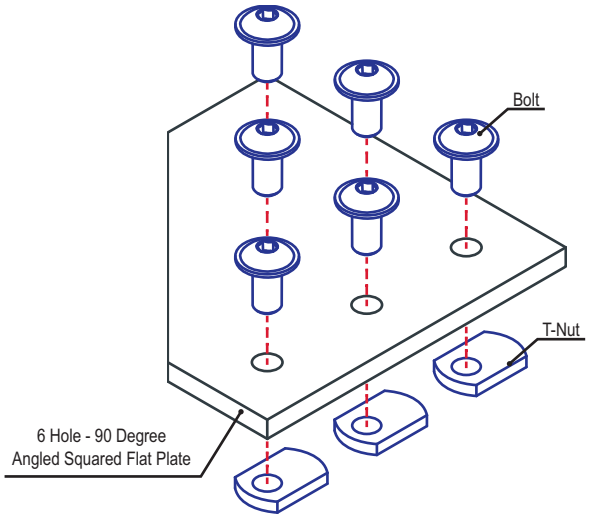

Part Description:

The 7 hole - 90 degree angled squared flat plate is an external fastening method that requires no machining services. This flat plate creates a 90 degree angle between profiles and its shape reinforces the strength of the connection. It is a durable option that is easy to assemble and can be reconfigured and reused. **Tip:** Use double or triple slide-in economy T-nuts (pg. 366-367) to save time and money. Pre-load your hardware prior to connecting profiles to simplify your assembly.

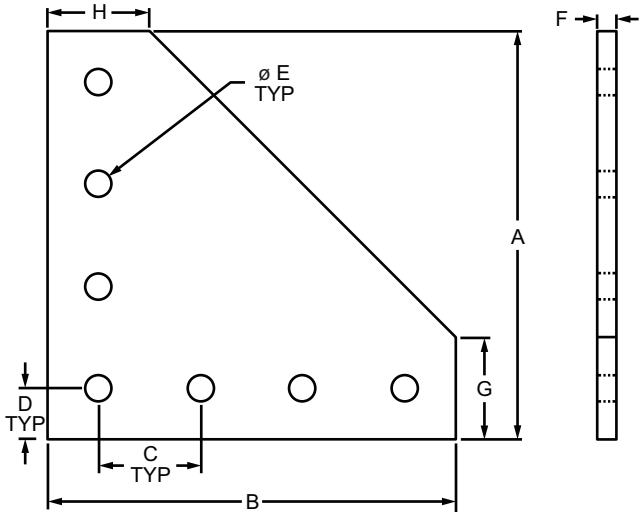

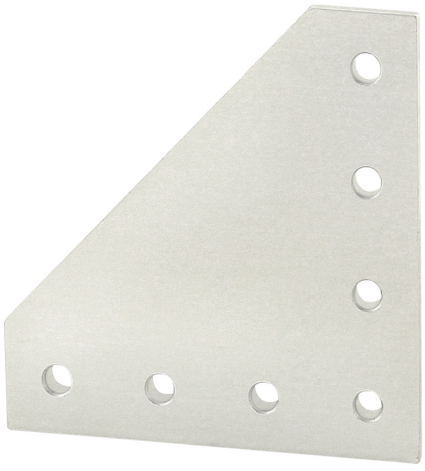

Part No.	Series	Material	Alloy*	Finish	A	B	C	D	E	F	G	H	Weight
4152	10	Aluminum	6105-T5	Clear Anodize	4.000"	4.000"	1.000"	.500"	.257"	.188"	1.000"	1.000"	.199 lb
4152-Black	10			Black Anodize	4.000"	4.000"	1.000"	.500"	.257"	.188"	1.000"	1.000"	.199 lb
4352	15			Clear Anodize	6.000"	6.000"	1.500"	.750"	.328"	.250"	1.500"	1.500"	.622 lb
4352-Black	15			Black Anodize	6.000"	6.000"	1.500"	.750"	.328"	.250"	1.500"	1.500"	.622 lb
25-4152	25			Clear Anodize	100.00mm	100.00mm	25.00mm	12.50mm	6.30mm	4.00mm	25.00mm	25.00mm	.0744 kg
25-4152-Black	25			Black Anodize	100.00mm	100.00mm	25.00mm	12.50mm	6.30mm	4.00mm	25.00mm	25.00mm	.0744 kg
40-4352	40			Clear Anodize	160.00mm	160.00mm	40.00mm	20.00mm	8.30mm	6.00mm	40.00mm	40.00mm	.2886 kg
40-4352-Black	40			Black Anodize	160.00mm	160.00mm	40.00mm	20.00mm	8.30mm	6.00mm	40.00mm	40.00mm	.2886 kg

* Or comparable

Suggested Hardware (Mount to T-Slot)

Part No.	Series	Qty.	Bolt	T-Nut
3321	10	7	1/4-20 x 1/2" FBHSCS	Economy
3320	15	7	5/16-18 x 11/16" FBHSCS	Economy
75-3404	25	7	M6 x 10mm BHSCS	Economy
75-3422	40	7	M8 x 16mm BHSCS	Economy

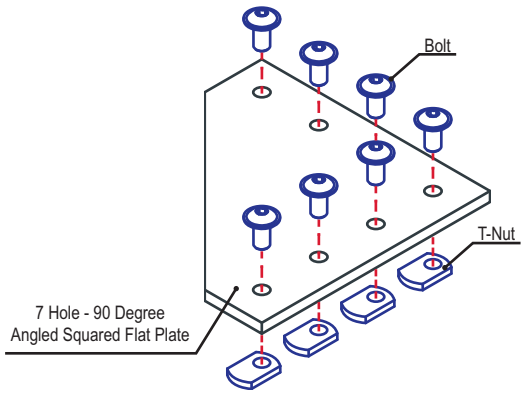

7 Hole - 90 Degree Angled Stacked Flat Plate

Part Description:

The 7 hole - 90 degree angled stacked flat plate is an external fastening method that requires no machining services. This flat plate creates a 90 degree angle between profiles and its shape reinforces the strength of the connection. It is a durable option that is easy to assemble and can be reconfigured and reused. **Tip:** Use double or triple slide-in economy T-nuts (pg. 366-367) to save time and money. Pre-load your hardware prior to connecting profiles to simplify your assembly.

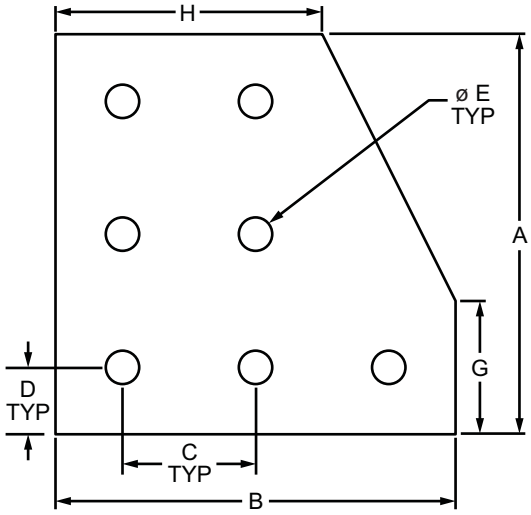

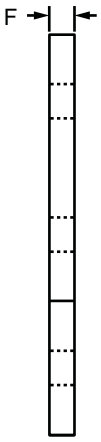

Part No.	Series	Material	Alloy*	Finish	A	B	C	D	E	F	G	H	Weight
4129	10	Aluminum	6105-T5	Clear Anodize	3.000"	3.000"	1.000"	.500"	.257"	.188"	1.000"	2.000"	.133 lb
4129-Black	10			Black Anodize	3.000"	3.000"	1.000"	.500"	.257"	.188"	1.000"	2.000"	.133 lb
4329	15			Clear Anodize	4.500"	4.500"	1.500"	.750"	.328"	.250"	1.500"	3.000"	.414 lb
4329-Black	15			Black Anodize	4.500"	4.500"	1.500"	.750"	.328"	.250"	1.500"	3.000"	.414 lb
25-4129	25			Clear Anodize	75.00mm	75.00mm	25.00mm	12.50mm	6.30mm	4.00mm	25.00mm	50.00mm	.0508 kg
25-4129-Black	25			Black Anodize	75.00mm	75.00mm	25.00mm	12.50mm	6.30mm	4.00mm	25.00mm	50.00mm	.0508 kg
40-4329	40			Clear Anodize	120.00mm	120.00mm	40.00mm	20.00mm	8.30mm	6.00mm	40.00mm	80.00mm	.1960 kg
40-4329-Black	40			Black Anodize	120.00mm	120.00mm	40.00mm	20.00mm	8.30mm	6.00mm	40.00mm	80.00mm	.1960 kg

* Or comparable

Suggested Hardware (Mount to T-Slot)

Part No.	Series	Qty.	Bolt	T-Nut
3321	10	7	1/4-20 x 1/2" FBHSCS	Economy
3320	15	7	5/16-18 x 11/16" FBHSCS	Economy
75-3404	25	7	M6 x 10mm BHSCS	Economy
75-3422	40	7	M8 x 16mm BHSCS	Economy

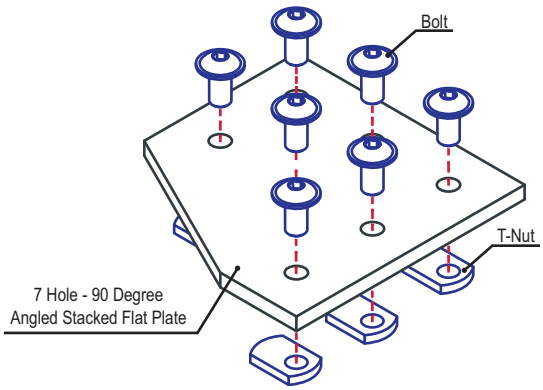

Part Description:

The 9 hole - 90 degree angled flat plate is an external fastening method that requires no machining services. This flat plate creates a 90 degree angle between profiles and its shape reinforces the strength of the connection. It is a durable option that is easy to assemble and can be reconfigured and reused. **Tip:** Use double or triple slide-in economy T-nuts (pg. 366-367) to save time and money. Pre-load your hardware prior to connecting profiles to simplify your assembly.

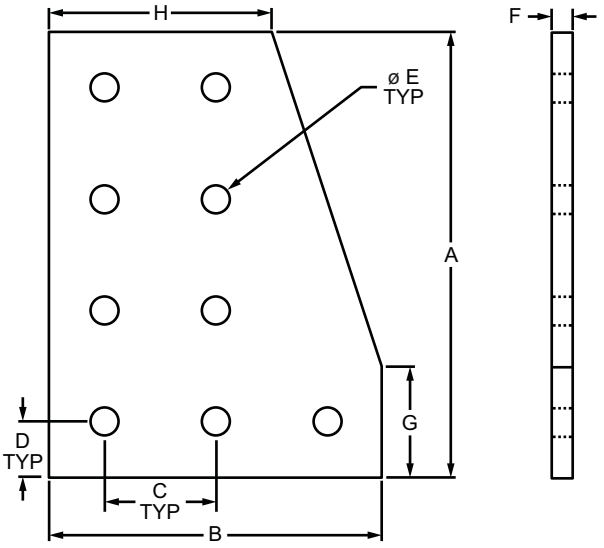

Part No.	Series	Material	Alloy*	Finish	A	B	C	D	E	F	G	H	Weight
4126	10	Aluminum	6105-T5	Clear Anodize	4.000"	3.000"	1.000"	.500"	.257"	.188"	1.000"	2.000"	.176 lb
4126-Black	10			Black Anodize	4.000"	3.000"	1.000"	.500"	.257"	.188"	1.000"	2.000"	.176 lb
4326	15			Clear Anodize	6.000"	4.500"	1.500"	.750"	.328"	.250"	1.500"	3.000"	.546 lb
4326-Black	15			Black Anodize	6.000"	4.500"	1.500"	.750"	.328"	.250"	1.500"	3.000"	.546 lb

* Or comparable

Suggested Hardware (Mount to T-Slot)

Part No.	Series	Qty.	Bolt	T-Nut
3321	10	9	1/4-20 x 1/2" FBHSCS	Economy
3320	15	9	5/16-18 x 11/16" FBHSCS	Economy

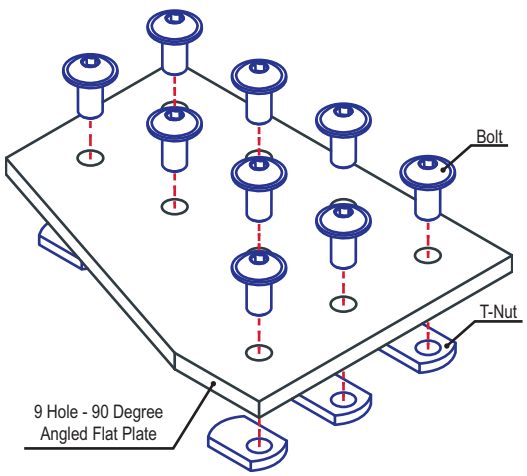

10 Hole - 90 Degree Angled Flat Plate

Part Description:

The 10 hole - 90 degree angled flat plate is an external fastening method that requires no machining services. This flat plate creates a 90 degree angle between profiles and its shape reinforces the strength of the connection. It is a durable option that is easy to assemble and can be reconfigured and reused. **Tip:** Use double or triple slide-in economy T-nuts (pg. 366-367) to save time and money. Pre-load your hardware prior to connecting profiles to simplify your assembly.

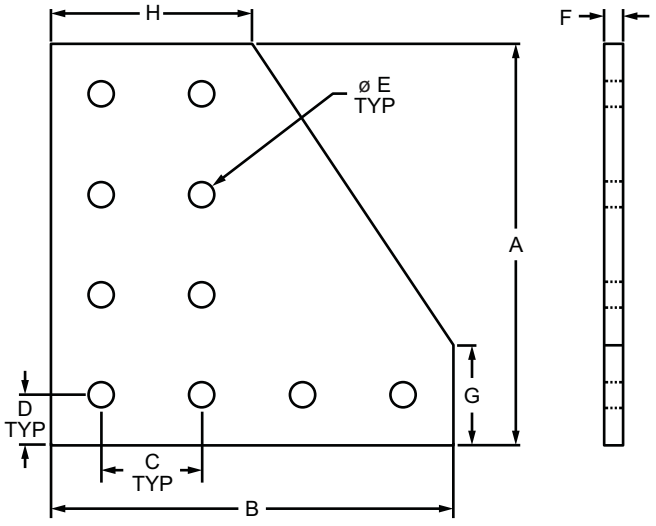

Part No.	Series	Material	Alloy*	Finish	A	B	C	D	E	F	G	H	Weight
4127	10	Aluminum	6105-T5	Clear Anodize	4.000"	4.000"	1.000"	.500"	.257"	.188"	1.000"	2.000"	.222 lb
4127-Black	10			Black Anodize	4.000"	4.000"	1.000"	.500"	.257"	.188"	1.000"	2.000"	.222 lb
4327	15			Clear Anodize	6.000"	6.000"	1.500"	.750"	.328"	.250"	1.500"	3.000"	.688 lb
4327-Black	15			Black Anodize	6.000"	6.000"	1.500"	.750"	.328"	.250"	1.500"	3.000"	.688 lb

* Or comparable

Suggested Hardware (Mount to T-Slot)

Part No.	Series	Qty.	Bolt	T-Nut
3321	10	10	1/4-20 x 1/2" FBHSCS	Economy
3320	15	10	5/16-18 x 11/16" FBHSCS	Economy

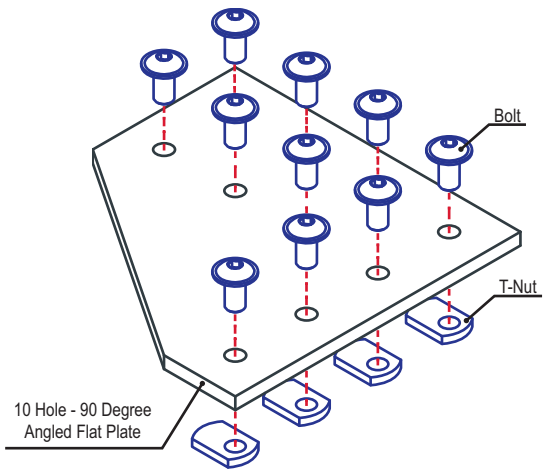

Part Description:

The 12 hole - 90 degree angled flat plate is an external fastening method that requires no machining services. This flat plate creates a 90 degree angle between profiles and its shape reinforces the strength of the connection. It is a durable option that is easy to assemble and can be reconfigured and reused. **Tip:** Use double or triple slide-in economy T-nuts (pg. 366-367) to save time and money. Pre-load your hardware prior to connecting profiles to simplify your assembly.

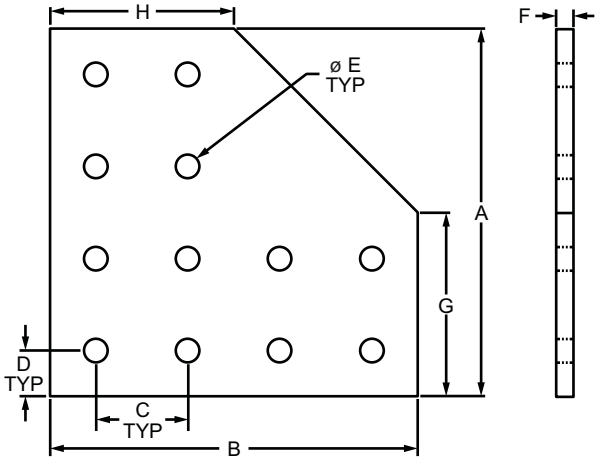

Part No.	Series	Material	Alloy*	Finish	A	B	C	D	E	F	G	H	Weight
4128	10	Aluminum	6105-T5	Clear Anodize	4.000"	4.000"	1.000"	.500"	.257"	.188"	2.000"	2.000"	.244 lb
4128-Black	10			Black Anodize	4.000"	4.000"	1.000"	.500"	.257"	.188"	2.000"	2.000"	.244 lb
4328	15			Clear Anodize	6.000"	6.000"	1.500"	.750"	.328"	.250"	3.000"	3.000"	.752 lb
4328-Black	15			Black Anodize	6.000"	6.000"	1.500"	.750"	.328"	.250"	3.000"	3.000"	.752 lb
25-4128	25			Clear Anodize	100.00mm	100.00mm	25.00mm	12.50mm	6.30mm	4.00mm	50.00mm	50.00mm	.1769 kg
25-4128-Black	25			Black Anodize	100.00mm	100.00mm	25.00mm	12.50mm	6.30mm	4.00mm	50.00mm	50.00mm	.1769 kg
40-4328	40			Clear Anodize	160.00mm	160.00mm	40.00mm	20.00mm	8.30mm	6.00mm	80.00mm	80.00mm	.3483 kg
40-4328-Black	40			Black Anodize	160.00mm	160.00mm	40.00mm	20.00mm	8.30mm	6.00mm	80.00mm	80.00mm	.3483 kg

* Or comparable

Suggested Hardware (Mount to T-Slot)

Part No.	Series	Qty.	Bolt	T-Nut
3321	10	12	1/4-20 x 1/2" FBHSCS	Economy
3320	15	12	5/16-18 x 11/16" FBHSCS	Economy
75-3404	25	12	M6 x 10mm BHSCS	Economy
75-3422	40	12	M8 x 16mm BHSCS	Economy

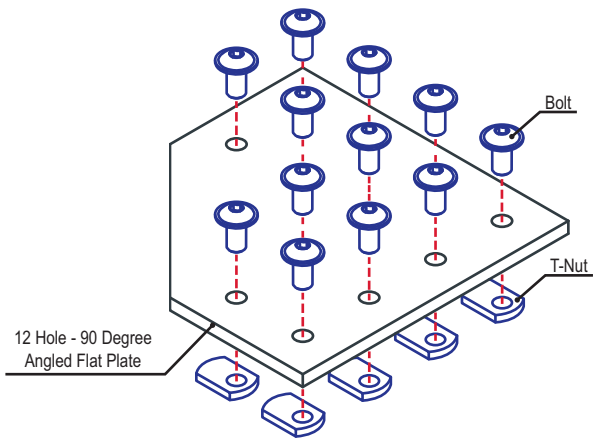

4 Hole - 15 Degree Angled Flat Plate

Part Description:

The 4 hole - 15 degree angled flat plate is an external fastening method that requires no machining services. This flat plate creates a 15 degree angle between profiles and its shape reinforces the strength of the connection. It is a durable option that is easy to assemble and can be reconfigured and reused. **Tip:** Use a double slide-in economy T-nut (pg. 366) to save time and money. Pre-load your hardware prior to connecting profiles to simplify your assembly.

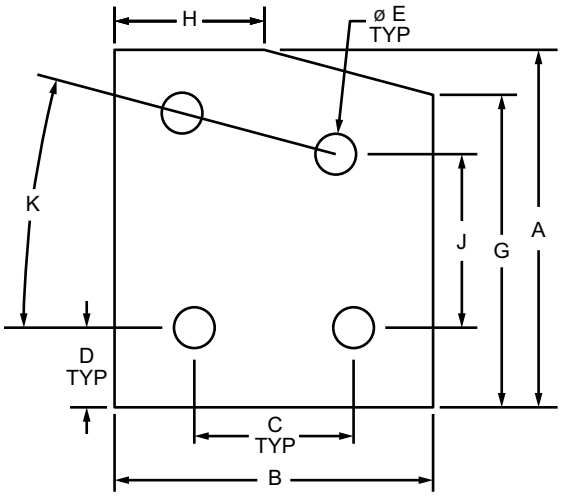

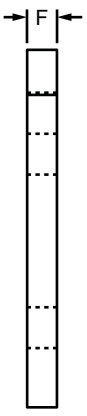

Part No.	Series	Material	Alloy*	Finish	A	B	C	D	E	F	G	H	J	K	Weight
4110	10	Aluminum	6105-T5	Clear Anodize	2.250"	2.000"	1.000"	.500"	.257"	.188"	1.966"	.940"	1.092"	15°	.075 lb
4110-Black	10			Black Anodize	2.250"	2.000"	1.000"	.500"	.257"	.188"	1.966"	.940"	1.092"	15°	.075 lb
4316	15			Clear Anodize	3.500"	3.000"	1.500"	.750"	.328"	.250"	2.949"	.944"	1.617"	15°	.104 lb
4316-Black	15			Black Anodize	3.500"	3.000"	1.500"	.750"	.328"	.250"	2.949"	.944"	1.617"	15°	.104 lb
40-4316	40			Clear Anodize	94.00mm	80.00mm	40.00mm	20.00mm	8.30mm	6.00mm	79.20mm	24.80mm	43.40mm	15°	.1057 kg
40-4316-Black	40			Black Anodize	94.00mm	80.00mm	40.00mm	20.00mm	8.30mm	6.00mm	79.20mm	24.80mm	43.40mm	15°	.1057 kg

* Or comparable

Suggested Hardware (Mount to T-Slot)

Part No.	Series	Qty.	Bolt	T-Nut
3321	10	4	1/4-20 x 1/2" FBHSCS	Economy
3320	15	4	5/16-18 x 11/16" FBHSCS	Economy
75-3422	40	4	M8 x 16mm BHSCS	Economy

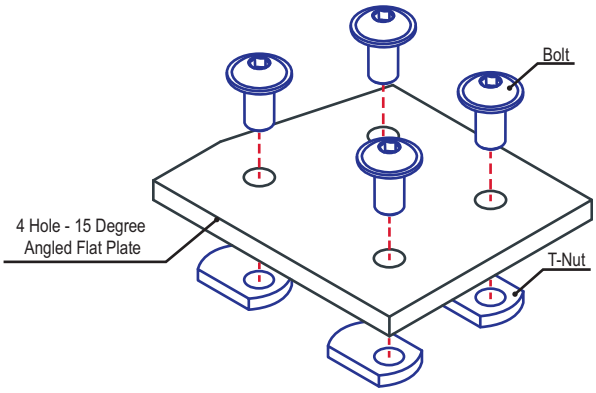

Part Description:

The 6 hole - 15 degree angled flat plate is an external fastening method that requires no machining services. This flat plate creates a 15 degree angle between profiles and its shape reinforces the strength of the connection. It is a durable option that is easy to assemble and can be reconfigured and reused. **Tip:** Use a double slide-in economy T-nut (pg. 366) to save time and money. Pre-load your hardware prior to connecting profiles to simplify your assembly.

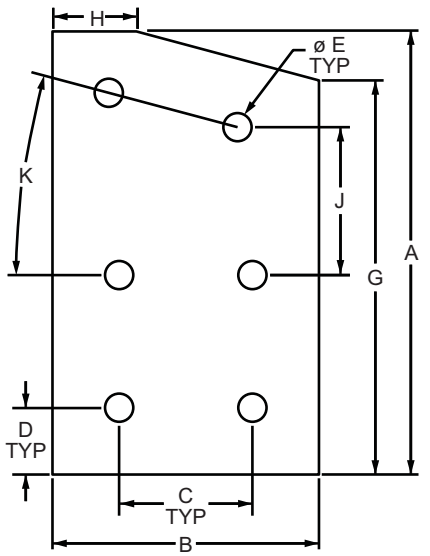

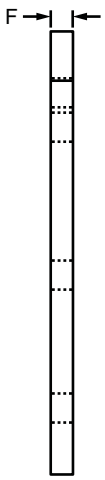

Part No.	Series	Material	Alloy*	Finish	A	B	C	D	E	F	G	H	J	K	Weight
4315	15	Aluminum	6105-T5	Clear Anodize	5.000"	3.000"	1.500"	.750"	.328"	.250"	4.307"	2.056"	1.669"	15°	.336 lb
4315-Black	15			Black Anodize	5.000"	3.000"	1.500"	.750"	.328"	.250"	4.307"	2.056"	1.669"	15°	.336 lb

* Or comparable

Suggested Hardware (Mount to T-Slot)

Part No.	Series	Qty.	Bolt	T-Nut
3320	15	6	5/16-18 x 11/16" FBHSCS	Economy

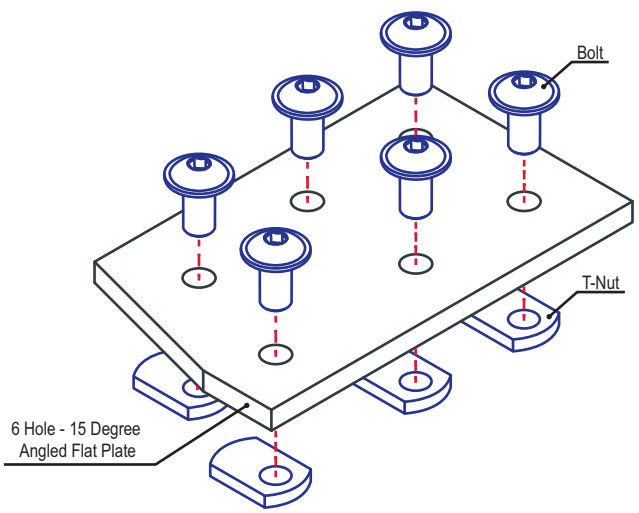

4 Hole - 30 Degree Angled Flat Plate

Part Description:

The 4 hole - 30 degree angled flat plate is an external fastening method that requires no machining services. This flat plate creates a 30 degree angle between profiles and its shape reinforces the strength of the connection. It is a durable option that is easy to assemble and can be reconfigured and reused. **Tip:** Use a double slide-in economy T-nut (pg. 366) to save time and money. Pre-load your hardware prior to connecting profiles to simplify your assembly.

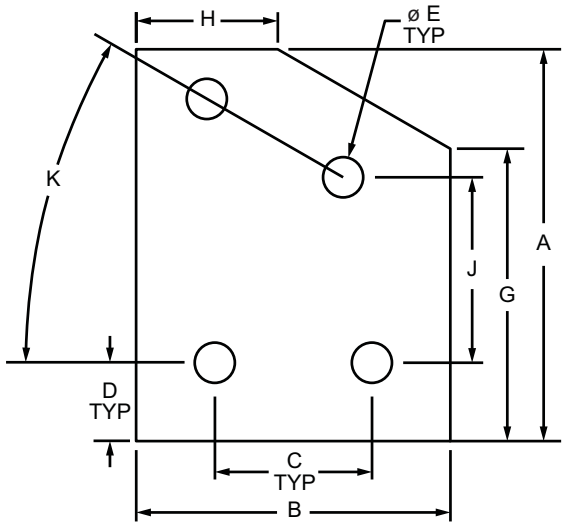

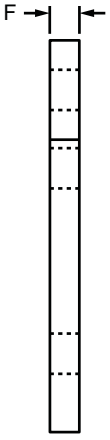

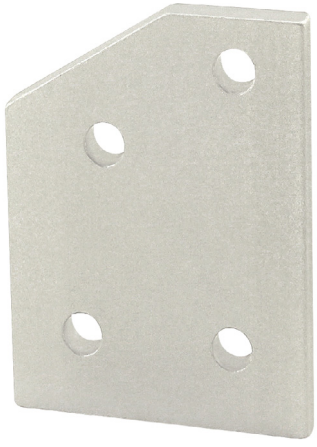

Part No.	Series	Material	Alloy*	Finish	A	B	C	D	E	F	G	H	J	K	Weight
4143	10	Aluminum	6105-T5	Clear Anodize	2.500"	2.000"	1.000"	.500"	.257"	.188"	1.866"	.902"	1.183"	30°	.080 lb
4143-Black	10			Black Anodize	2.500"	2.000"	1.000"	.500"	.257"	.188"	1.866"	.902"	1.183"	30°	.080 lb
4331	15			Clear Anodize	3.500"	3.000"	1.500"	.750"	.328"	.250"	2.799"	1.786"	1.650"	30°	.234 lb
4331-Black	15			Black Anodize	3.500"	3.000"	1.500"	.750"	.328"	.250"	2.799"	1.786"	1.650"	30°	.234 lb
40-4331	40			Clear Anodize	93.40mm	80.00mm	40.00mm	20.00mm	8.30mm	6.00mm	75.20mm	48.50mm	45.50mm	30°	.1084 kg
40-4331-Black	40			Black Anodize	93.40mm	80.00mm	40.00mm	20.00mm	8.30mm	6.00mm	75.20mm	48.50mm	45.50mm	30°	.1084 kg

* Or comparable

Suggested Hardware (Mount to T-Slot)

Part No.	Series	Qty.	Bolt	T-Nut
3321	10	4	1/4-20 x 1/2" FBHSCS	Economy
3320	15	4	5/16-18 x 11/16" FBHSCS	Economy
75-3422	40	4	M8 x 16mm BHSCS	Economy

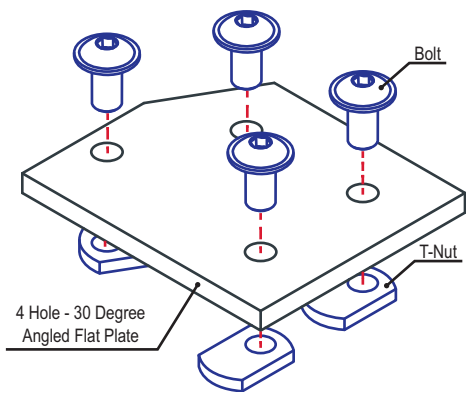

Part Description:

The 6 hole - 30 degree angled flat plate is an external fastening method that requires no machining services. This flat plate creates a 30 degree angle between profiles and its shape reinforces the strength of the connection. It is a durable option that is easy to assemble and can be reconfigured and reused. **Tip:** Use a double slide-in economy T-nut (pg. 366) to save time and money. Pre-load your hardware prior to connecting profiles to simplify your assembly.

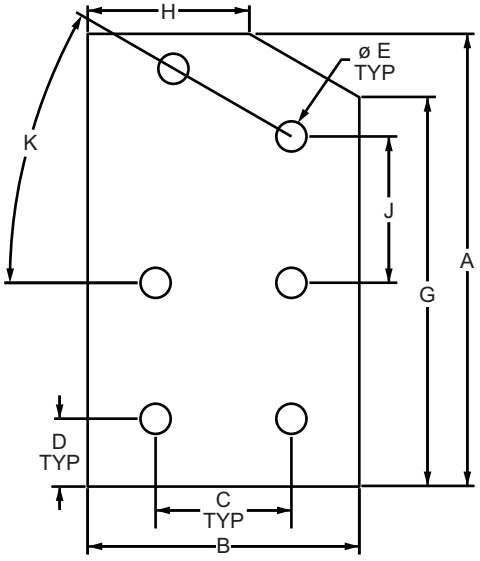

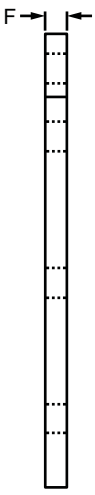

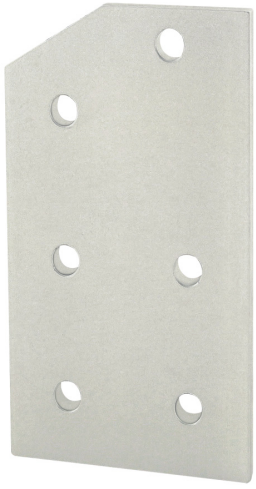

Part No.	Series	Material	Alloy*	Finish	A	B	C	D	E	F	G	H	J	K	Weight
4330	15	Aluminum	6105-T5	Clear Anodize	5.000"	3.000"	1.500"	.750"	.328"	.250"	4.299"	1.786"	1.616"	30°	.338 lb
4330-Black	15			Black Anodize	5.000"	3.000"	1.500"	.750"	.328"	.250"	4.299"	1.786"	1.616"	30°	.338 lb
40-4330	40			Clear Anodize	133.40mm	80.00mm	40.00mm	20.00mm	8.30mm	6.00mm	115.20mm	48.50mm	45.50mm	30°	.1551 kg
40-4330-Black	40			Black Anodize	133.40mm	80.00mm	40.00mm	20.00mm	8.30mm	6.00mm	115.20mm	48.50mm	45.50mm	30°	.1551 kg

* Or comparable

Suggested Hardware (Mount to T-Slot)

Part No.	Series	Qty.	Bolt	T-Nut
3320	15	6	5/16-18 x 11/16" FBHSCS	Economy
75-3422	40	6	M8 x 16mm BHSCS	Economy

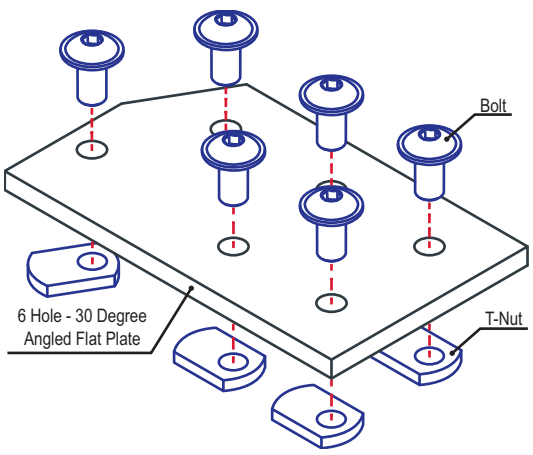

4 Hole - 45 Degree Angled Flat Plate

Part Description:

The 4 hole - 45 degree angled flat plate is an external fastening method that requires no machining services. This flat plate creates a 45 degree angle between profiles and its shape reinforces the strength of the connection. It is a durable option that is easy to assemble and can be reconfigured and reused. **Tip:** Use a double slide-in economy T-nut (pg. 366) to save time and money. Pre-load your hardware prior to connecting profiles to simplify your assembly.

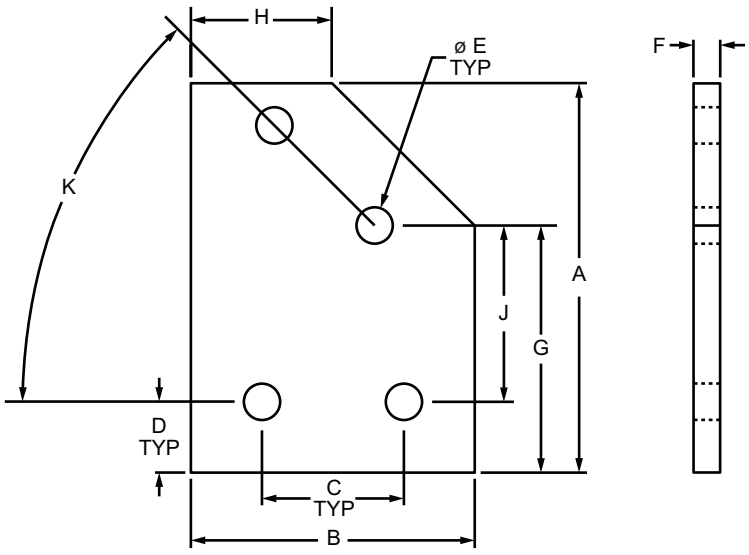

Part No.	Series	Material	Alloy*	Finish	A	B	C	D	E	F	G	H	J	K	Weight
4145	10	Aluminum	6105-T5	Clear Anodize	2.750"	2.000"	1.000"	.500"	.257"	.188"	1.744"	.994"	1.244"	45°	.086 lb
4145-Black	10			Black Anodize	2.750"	2.000"	1.000"	.500"	.257"	.188"	1.744"	.994"	1.244"	45°	.086 lb
4346	15			Clear Anodize	4.500"	3.000"	1.500"	.750"	.328"	.250"	2.561"	1.061"	1.811"	45°	.270 lb
4346-Black	15			Black Anodize	4.500"	3.000"	1.500"	.750"	.328"	.250"	2.561"	1.061"	1.811"	45°	.270 lb
40-4346	40			Clear Anodize	120.00mm	80.00mm	40.00mm	20.00mm	8.30mm	6.00mm	68.60mm	28.60mm	48.60mm	45°	.1111 kg
40-4346-Black	40			Black Anodize	120.00mm	80.00mm	40.00mm	20.00mm	8.30mm	6.00mm	68.60mm	28.60mm	48.60mm	45°	.1111 kg

* Or comparable

Suggested Hardware (Mount to T-Slot)

Part No.	Series	Qty.	Bolt	T-Nut
3321	10	4	1/4-20 x 1/2" FBHSCS	Economy
3320	15	4	5/16-18 x 11/16" FBHSCS	Economy
75-3422	40	4	M8 x 16mm BHSCS	Economy

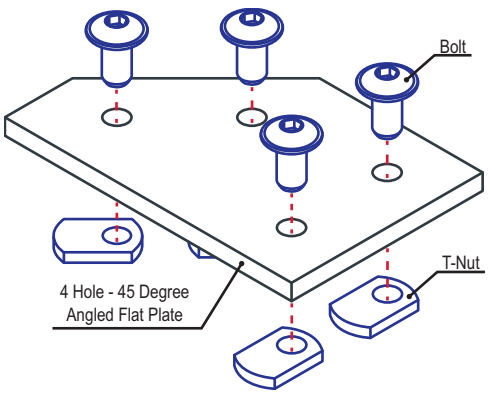

Part Description:

The 6 hole - 45 degree angled flat plate is an external fastening method that requires no machining services. This flat plate creates a 45 degree angle between profiles and its shape reinforces the strength of the connection. It is a durable option that is easy to assemble and can be reconfigured and reused. **Tip:** Use a double slide-in economy T-nut (pg. 366) to save time and money. Pre-load your hardware prior to connecting profiles to simplify your assembly.

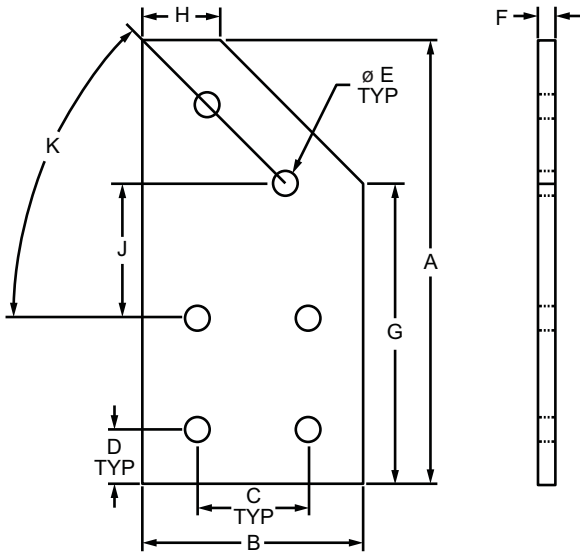

Part No.	Series	Material	Alloy*	Finish	A	B	C	D	E	F	G	H	J	K	Weight
4345	15	Aluminum	6105-T5	Clear Anodize	6.000"	3.000"	1.500"	.750"	.328"	.250"	4.061"	1.061"	1.811"	45°	.368 lb
4345-Black	15			Black Anodize	6.000"	3.000"	1.500"	.750"	.328"	.250"	4.061"	1.061"	1.811"	45°	.368 lb
40-4345	40			Clear Anodize	160.00mm	80.00mm	40.00mm	20.00mm	8.30mm	6.00mm	108.60mm	28.60mm	48.60mm	45°	.1801 kg
40-4345-Black	40			Black Anodize	160.00mm	80.00mm	40.00mm	20.00mm	8.30mm	6.00mm	108.60mm	28.60mm	48.60mm	45°	.1801 kg

* Or comparable

Suggested Hardware (Mount to T-Slot)

Part No.	Series	Qty.	Bolt	T-Nut
3320	15	6	5/16-18 x 11/16" FBHSCS	Economy
75-3422	40	6	M8 x 16mm BHSCS	Economy

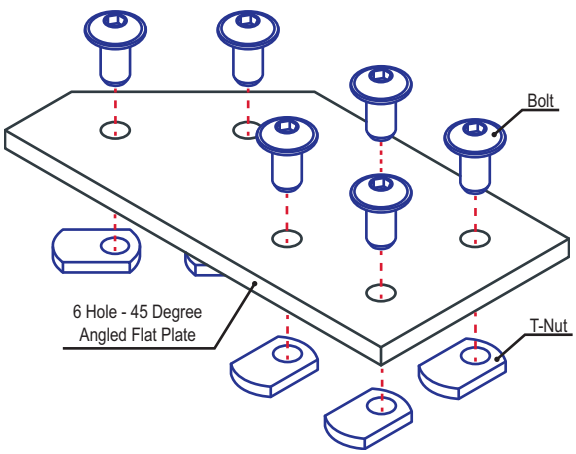

4 Hole - 60 Degree Angled Flat Plate

Part Description:

The 4 hole - 60 degree angled flat plate is an external fastening method that requires no machining services. This flat plate creates a 60 degree angle between profiles and its shape reinforces the strength of the connection. It is a durable option that is easy to assemble and can be reconfigured and reused. **Tip:** Use a double slide-in economy T-nut (pg. 366) to save time and money. Pre-load your hardware prior to connecting profiles to simplify your assembly.

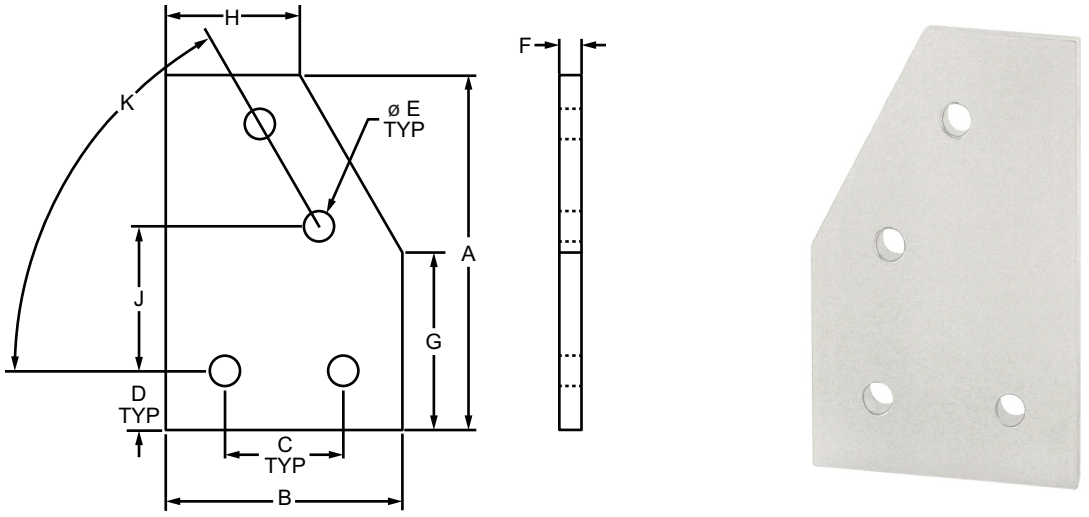

Part No.	Series	Material	Alloy*	Finish	A	B	C	D	E	F	G	H	J	K	Weight
4164	10	Aluminum	6105-T5	Clear Anodize	3.000"	2.000"	1.000"	.500"	.257"	.188"	1.500"	1.134"	1.221"	60°	.092 lb
4164-Black	10			Black Anodize	3.000"	2.000"	1.000"	.500"	.257"	.188"	1.500"	1.134"	1.221"	60°	.092 lb
4361	15			Clear Anodize	4.500"	3.000"	1.500"	.750"	.328"	.250"	2.250"	1.701"	1.558"	60°	.280 lb
4361-Black	15			Black Anodize	4.500"	3.000"	1.500"	.750"	.328"	.250"	2.250"	1.701"	1.558"	60°	.280 lb
40-4361	40			Clear Anodize	120.00mm	80.00mm	40.00mm	20.00mm	8.30mm	6.00mm	60.00mm	45.40mm	47.30mm	60°	.1296 kg
40-4361-Black	40			Black Anodize	120.00mm	80.00mm	40.00mm	20.00mm	8.30mm	6.00mm	60.00mm	45.40mm	47.30mm	60°	.1296 kg

* Or comparable

Suggested Hardware (Mount to T-Slot)

Part No.	Series	Qty.	Bolt	T-Nut
3321	10	4	1/4-20 x 1/2" FBHSCS	Economy
3320	15	4	5/16-18 x 11/16" FBHSCS	Economy
75-3422	40	4	M8 x 16mm BHSCS	Economy

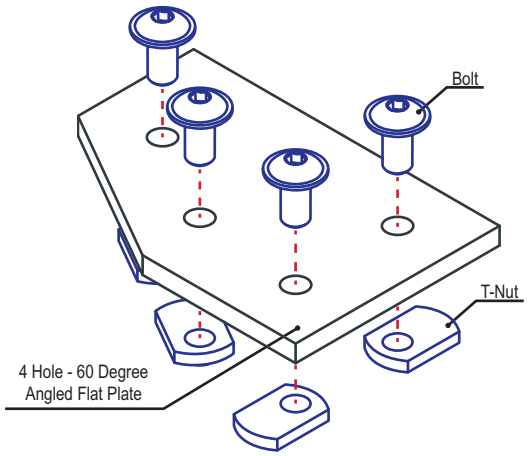

6 Hole - 60 Degree Angled Flat Plate

Part Description:

The 6 hole - 60 degree angled flat plate is an external fastening method that requires no machining services. This flat plate creates a 60 degree angle between profiles and its shape reinforces the strength of the connection. It is a durable option that is easy to assemble and can be reconfigured and reused. **Tip:** Use a double slide-in economy T-nut (pg. 366) to save time and money. Pre-load your hardware prior to connecting profiles to simplify your assembly.

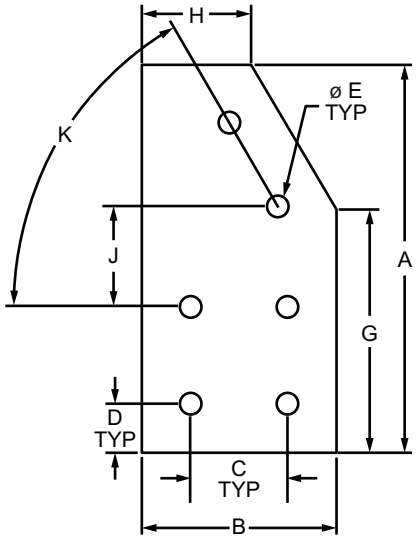

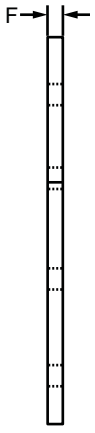

Part No.	Series	Material	Alloy*	Finish	A	B	C	D	E	F	G	H	J	K	Weight
4362	15	Aluminum	6105-T5	Clear Anodize	6.000"	3.000"	1.500"	.750"	.328"	.250"	3.750"	1.701"	1.558"	60°	.384 lb
4362-Black	15			Black Anodize	6.000"	3.000"	1.500"	.750"	.328"	.250"	3.750"	1.701"	1.558"	60°	.384 lb
40-4362	40			Clear Anodize	160.00mm	80.00mm	40.00mm	20.00mm	8.30mm	6.00mm	100.00mm	45.40mm	47.30mm	60°	.1837 kg
40-4362-Black	40			Black Anodize	160.00mm	80.00mm	40.00mm	20.00mm	8.30mm	6.00mm	100.00mm	45.40mm	47.30mm	60°	.1837 kg

* Or comparable

Suggested Hardware (Mount to T-Slot)

Part No.	Series	Qty.	Bolt	T-Nut
3320	15	6	5/16-18 x 11/16" FBHSCS	Economy
75-3422	40	6	M8 x 16mm BHSCS	Economy

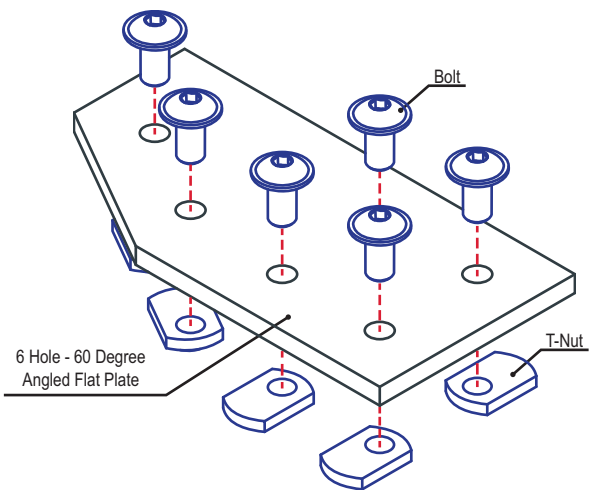

4 Hole - Tee Flat Plate

Part Description:

The 4 hole - tee flat plate is a strong, external fastening method that requires no machining services and can be used to connect more than two profiles together. This fastening option can provide infinite positioning along the profile T-slot, allowing for a large degree of adjustability. It is a long-lasting connection that is easily assembled and can be repositioned and reused. **Tip:** Use a double slide-in economy T-nut (pg. 366) to save time and money. Pre-load your hardware prior to connecting profiles to simplify your assembly.

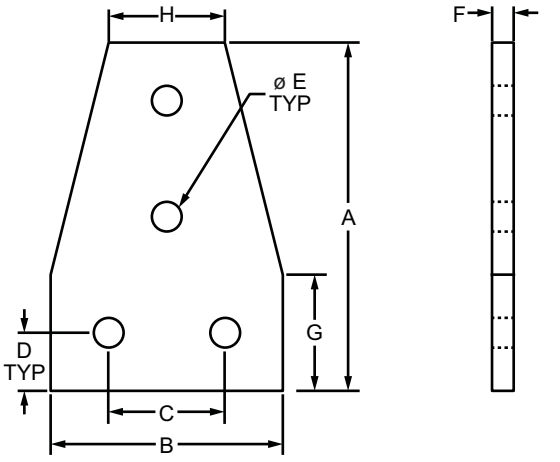

Part No.	Series	Material	Alloy*	Finish	A	B	C	D	E	F	G	H	Weight
4141	10	Aluminum	6105-T5	Clear Anodize	3.000"	2.000"	1.000"	.500"	.257"	.188"	1.000"	1.000"	.086 lb
4141-Black	10			Black Anodize	3.000"	2.000"	1.000"	.500"	.257"	.188"	1.000"	1.000"	.086 lb
4341	15			Clear Anodize	4.500"	3.000"	1.500"	.750"	.328"	.250"	1.500"	1.500"	.267 lb
4341-Black	15			Black Anodize	4.500"	3.000"	1.500"	.750"	.328"	.250"	1.500"	1.500"	.267 lb
25-4141	25			Clear Anodize	75.00mm	50.00mm	25.00mm	12.50mm	6.30mm	4.00mm	25.00mm	25.00mm	.0318 kg
25-4141-Black	25			Black Anodize	75.00mm	50.00mm	25.00mm	12.50mm	6.30mm	4.00mm	25.00mm	25.00mm	.0318 kg
40-4341	40			Clear Anodize	120.00mm	80.00mm	40.00mm	20.00mm	8.30mm	6.00mm	40.00mm	40.00mm	.1207 kg
40-4341-Black	40			Black Anodize	120.00mm	80.00mm	40.00mm	20.00mm	8.30mm	6.00mm	40.00mm	40.00mm	.1207 kg

* Or comparable

Suggested Hardware (Mount to T-Slot)

Part No.	Series	Qty.	Bolt	T-Nut
3321	10	4	1/4-20 x 1/2" FBHSCS	Economy
3320	15	4	5/16-18 x 11/16" FBHSCS	Economy
75-3404	25	4	M6 x 10mm BHSCS	Economy
75-3422	40	4	M8 x 16mm BHSCS	Economy

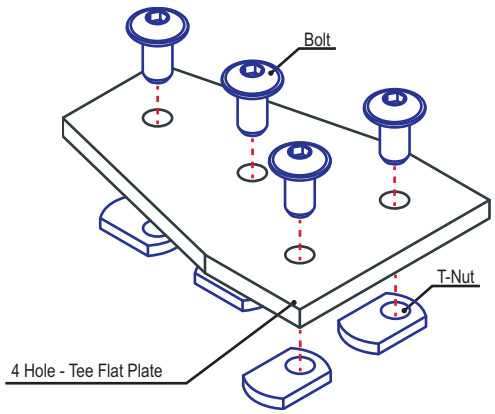

Part Description:

The 5 hole - tee flat plate is a strong, external fastening method that requires no machining services and can be used to connect more than two profiles together. This fastening option can provide infinite positioning along the profile T-slot, allowing for a large degree of adjustability. It is a long-lasting connection that is easily assembled and can be repositioned and reused. **Tip:** Use double or triple slide-in economy T-nuts (pg. 366-367) to save time and money. Pre-load your hardware prior to connecting profiles to simplify your assembly.

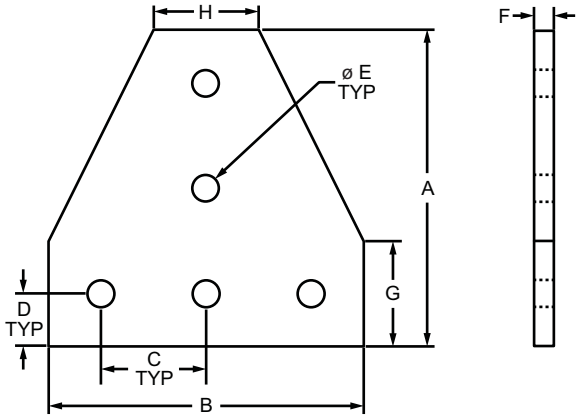

Part No.	Series	Material	Alloy*	Finish	A	B	C	D	E	F	G	H	Weight
4140	10	Aluminum	6105-T5	Clear Anodize	3.000"	3.000"	1.000"	.500"	.257"	.188"	1.000"	1.000"	.118 lb
4140-Black	10			Black Anodize	3.000"	3.000"	1.000"	.500"	.257"	.188"	1.000"	1.000"	.118 lb
4340	15			Clear Anodize	4.500"	4.500"	1.500"	.750"	.328"	.250"	1.500"	1.500"	.364 lb
4340-Black	15			Black Anodize	4.500"	4.500"	1.500"	.750"	.328"	.250"	1.500"	1.500"	.364 lb
25-4140	25			Clear Anodize	75.00mm	75.00mm	25.00mm	12.50mm	6.30mm	4.00mm	25.00mm	25.00mm	.0210 kg
25-4140-Black	25			Black Anodize	75.00mm	75.00mm	25.00mm	12.50mm	6.30mm	4.00mm	25.00mm	25.00mm	.0210 kg
30-4340	30			Clear Anodize	90.00mm	90.00mm	30.00mm	15.00mm	6.30mm	4.00mm	30.00mm	30.00mm	.0645 kg
30-4340-Black	30			Black Anodize	90.00mm	90.00mm	30.00mm	15.00mm	6.30mm	4.00mm	30.00mm	30.00mm	.0645 kg
40-4340	40			Clear Anodize	120.00mm	120.00mm	40.00mm	20.00mm	8.30mm	6.00mm	40.00mm	40.00mm	.1734 kg
40-4340-Black	40			Black Anodize	120.00mm	120.00mm	40.00mm	20.00mm	8.30mm	6.00mm	40.00mm	40.00mm	.1734 kg
45-4340	45			Clear Anodize	135.00mm	135.00mm	45.00mm	22.50mm	8.30mm	6.00mm	45.00mm	45.00mm	.2203 kg
45-4340-Black	45			Black Anodize	135.00mm	135.00mm	45.00mm	22.50mm	8.30mm	6.00mm	45.00mm	45.00mm	.2203 kg

* Or comparable

Suggested Hardware (Mount to T-Slot)

Part No.	Series	Qty.	Bolt	T-Nut
3321	10	5	1/4-20 x 1/2" FBHSCS	Economy
3320	15	5	5/16-18 x 11/16" FBHSCS	Economy
75-3404	25	5	M6 x 10mm BHSCS	Economy
75-3600	30	5	M6 x 12mm BHSCS	Drop-in
75-3422	40	5	M8 x 16mm BHSCS	Economy
75-3619	45	5	M8 x 18mm BHSCS	Drop-in

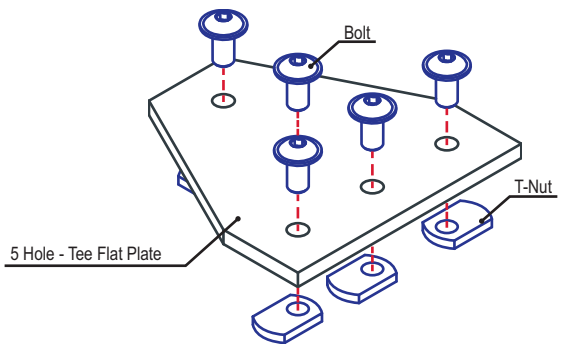

6 Hole - Tee Flat Plate

Part Description:

The 6 hole - tee flat plate is a strong, external fastening method that requires no machining services and can be used to connect more than two profiles together. This fastening option can provide infinite positioning along the profile T-slot, allowing for a large degree of adjustability. It is a long-lasting connection that is easily assembled and can be repositioned and reused. **Tip:** Use double or triple slide-in economy T-nuts (pg. 366-367) to save time and money. Pre-load your hardware prior to connecting profiles to simplify your assembly.

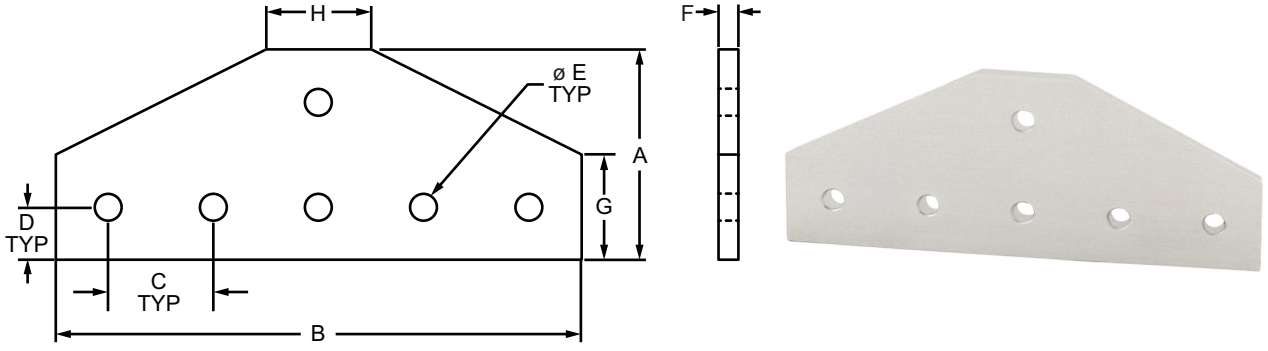

Part No.	Series	Material	Alloy*	Finish	A	B	C	D	E	F	G	H	Weight
4123	10	Aluminum	6105-T5	Clear Anodize	2.000"	5.000"	1.000"	.500"	.257"	.188"	1.000"	1.000"	.137 lb
4123-Black	10			Black Anodize	2.000"	5.000"	1.000"	.500"	.257"	.188"	1.000"	1.000"	.137 lb
4310	15			Clear Anodize	3.000"	7.500"	1.500"	.750"	.328"	.250"	1.500"	1.500"	.416 lb
4310-Black	15			Black Anodize	3.000"	7.500"	1.500"	.750"	.328"	.250"	1.500"	1.500"	.416 lb

* Or comparable

Suggested Hardware (Mount to T-Slot)

Part No.	Series	Qty.	Bolt	T-Nut
3321	10	6	1/4-20 x 1/2" FBHSCS	Economy
3320	15	6	5/16-18 x 11/16" FBHSCS	Economy

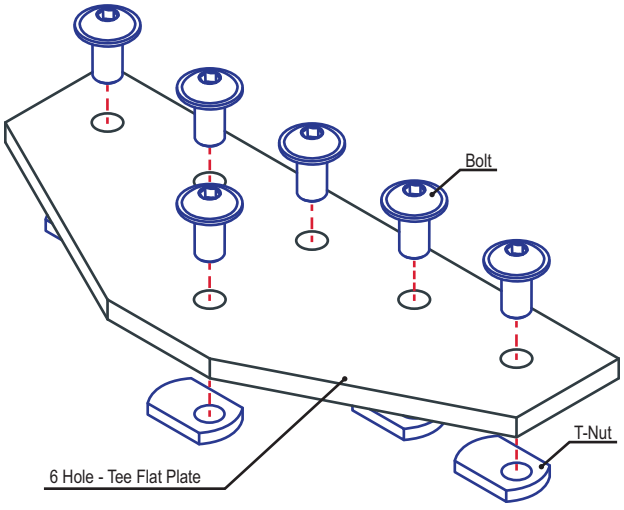

Part Description:

The 7 hole - tee flat plate is a strong, external fastening method that requires no machining services and can be used to connect more than two profiles together. This fastening option can provide infinite positioning along the profile T-slot, allowing for a large degree of adjustability. It is a long-lasting connection that is easily assembled and can be repositioned and reused. **Tip:** Use double or triple slide-in economy T-nuts (pg. 366-367) to save time and money. Pre-load your hardware prior to connecting profiles to simplify your assembly.

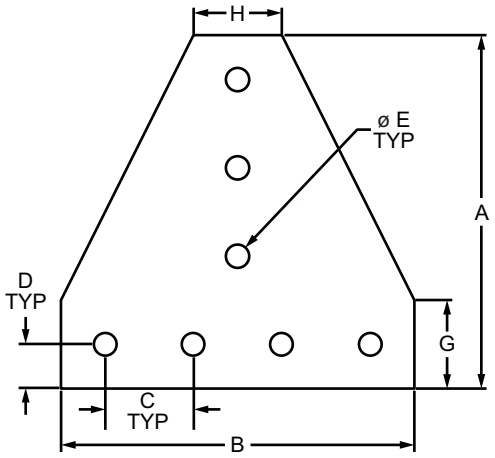

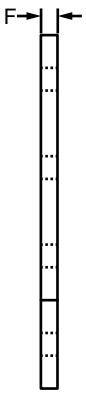

Part No.	Series	Material	Alloy*	Finish	A	B	C	D	E	F	G	H	Weight
4112	10	Aluminum	6105-T5	Clear Anodize	4.000"	4.000"	1.000"	.500"	.257"	.188"	1.000"	1.000"	.199 lb
4112-Black	10			Black Anodize	4.000"	4.000"	1.000"	.500"	.257"	.188"	1.000"	1.000"	.199 lb
4312	15			Clear Anodize	6.000"	6.000"	1.500"	.750"	.328"	.250"	1.500"	1.500"	.604 lb
4312-Black	15			Black Anodize	6.000"	6.000"	1.500"	.750"	.328"	.250"	1.500"	1.500"	.604 lb
25-4112	25			Clear Anodize	100.00mm	100.00mm	25.00mm	12.50mm	6.30mm	4.00mm	25.00mm	25.00mm	.0739 kg
25-4112-Black	25			Black Anodize	100.00mm	100.00mm	25.00mm	12.50mm	6.30mm	4.00mm	25.00mm	25.00mm	.0739 kg
40-4312	40			Clear Anodize	160.00mm	160.00mm	40.00mm	20.00mm	8.30mm	6.00mm	40.00mm	40.00mm	.2853 kg
40-4312-Black	40			Black Anodize	160.00mm	160.00mm	40.00mm	20.00mm	8.30mm	6.00mm	40.00mm	40.00mm	.2853 kg

* Or comparable

Suggested Hardware (Mount to T-Slot)

Part No.	Series	Qty.	Bolt	T-Nut
3321	10	7	1/4-20 x 1/2" FBHSCS	Economy
3320	15	7	5/16-18 x 11/16" FBHSCS	Economy
75-3404	25	7	M6 x 10mm BHSCS	Economy
75-3422	40	7	M8 x 16mm BHSCS	Economy

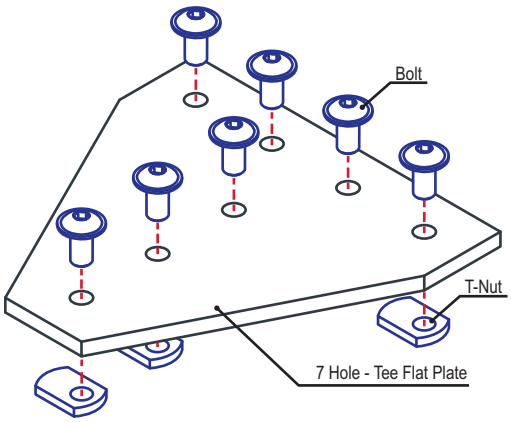

8 Hole - Tee Flat Plate

Part Description:

The 8 hole - tee flat plate is a strong, external fastening method that requires no machining services and can be used to connect more than two profiles together. This fastening option can provide infinite positioning along the profile T-slot, allowing for a large degree of adjustability. It is a long-lasting connection that is easily assembled and can be repositioned and reused. **Tip:** Use double or triple slide-in economy T-nuts (pg. 366-367) to save time and money. Pre-load your hardware prior to connecting profiles to simplify your assembly.

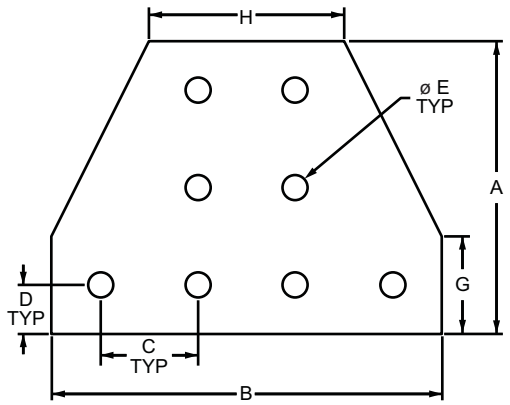

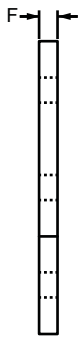

Part No.	Series	Material	Alloy*	Finish	A	B	C	D	E	F	G	H	Weight
4155	10	Aluminum	6105-T5	Clear Anodize	3.000"	4.000"	1.000"	.500"	.257"	.188"	1.000"	2.000"	.167 lb
4155-Black	10			Black Anodize	3.000"	4.000"	1.000"	.500"	.257"	.188"	1.000"	2.000"	.167 lb
4355	15			Clear Anodize	4.500"	6.000"	1.500"	.750"	.328"	.250"	1.500"	3.000"	.514 lb
4355-Black	15			Black Anodize	4.500"	6.000"	1.500"	.750"	.328"	.250"	1.500"	3.000"	.514 lb
25-4155	25			Clear Anodize	75.00mm	100.00mm	25.00mm	12.50mm	6.30mm	4.00mm	25.00mm	50.00mm	.0648 kg
25-4155-Black	25			Black Anodize	75.00mm	100.00mm	25.00mm	12.50mm	6.30mm	4.00mm	25.00mm	50.00mm	.0648 kg
40-4355	40			Clear Anodize	120.00mm	160.00mm	40.00mm	20.00mm	8.30mm	6.00mm	40.00mm	80.00mm	.2467 kg
40-4355-Black	40			Black Anodize	120.00mm	160.00mm	40.00mm	20.00mm	8.30mm	6.00mm	40.00mm	80.00mm	.2467 kg
45-4355	45			Clear Anodize	135.00mm	180.00mm	45.00mm	22.50mm	8.30mm	6.00mm	45.00mm	90.00mm	.3171 kg
45-4355-Black	45			Black Anodize	135.00mm	180.00mm	45.00mm	22.50mm	8.30mm	6.00mm	45.00mm	90.00mm	.3171 kg

* Or comparable

Suggested Hardware (Mount to T-Slot)

Part No.	Series	Qty.	Bolt	T-Nut
3321	10	8	1/4-20 x 1/2" FBHSCS	Economy
3320	15	8	5/16-18 x 11/16" FBHSCS	Economy
75-3404	25	8	M6 x 10mm BHSCS	Economy
75-3422	40	8	M8 x 16mm BHSCS	Economy
75-3619	45	8	M8 x 18mm BHSCS	Drop-in

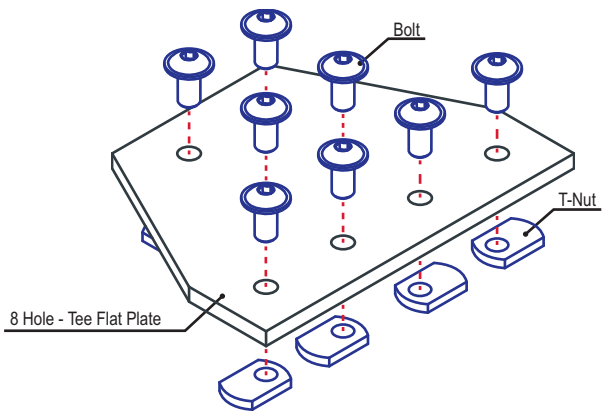

Part Description:

The 11 hole - tee flat plate is a strong, external fastening method that requires no machining services and can be used to connect more than two profiles together. This fastening option can provide infinite positioning along the profile T-slot, allowing for a large degree of adjustability. It is a long-lasting connection that is easily assembled and can be repositioned and reused. **Tip:** Use double or triple slide-in economy T-nuts (pg. 366-367) to save time and money. Pre-load your hardware prior to connecting profiles to simplify your assembly.

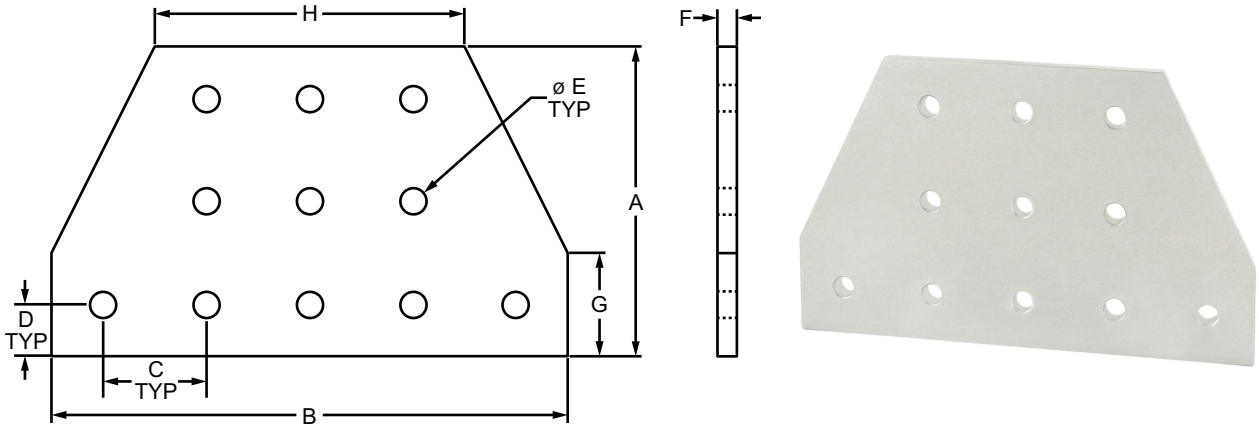

Part No.	Series	Material	Alloy*	Finish	A	B	C	D	E	F	G	H	Weight
4021	10	Aluminum	6105-T5	Clear Anodize	3.000"	5.000"	1.000"	.500"	.257"	.188"	1.000"	3.000"	.219 lb
4021-Black	10			Black Anodize	3.000"	5.000"	1.000"	.500"	.257"	.188"	1.000"	3.000"	.219 lb
4421	15			Clear Anodize	4.500"	7.500"	1.500"	.750"	.328"	.250"	1.500"	4.500"	.671 lb
4421-Black	15			Black Anodize	4.500"	7.500"	1.500"	.750"	.328"	.250"	1.500"	4.500"	.671 lb

* Or comparable

Suggested Hardware (Mount to T-Slot)

Part No.	Series	Qty.	Bolt	T-Nut
3321	10	11	1/4-20 x 1/2" FBHSCS	Economy
3320	15	11	5/16-18 x 11/16" FBHSCS	Economy

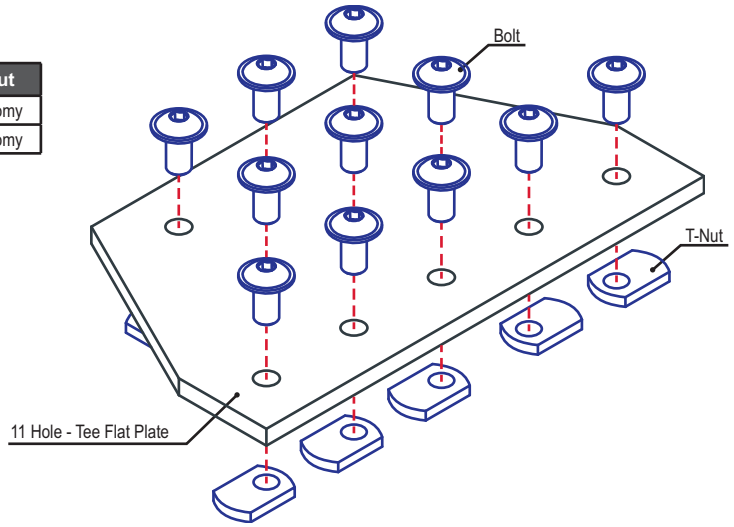

12 Hole - Tee Flat Plate

Part Description:

The 12 hole - tee flat plate is a strong, external fastening method that requires no machining services and can be used to connect more than two profiles together. This fastening option can provide infinite positioning along the profile T-slot, allowing for a large degree of adjustability. It is a long-lasting connection that is easily assembled and can be repositioned and reused. **Tip:** Use double or triple slide-in economy T-nuts (pg. 366-367) to save time and money. Pre-load your hardware prior to connecting profiles to simplify your assembly.

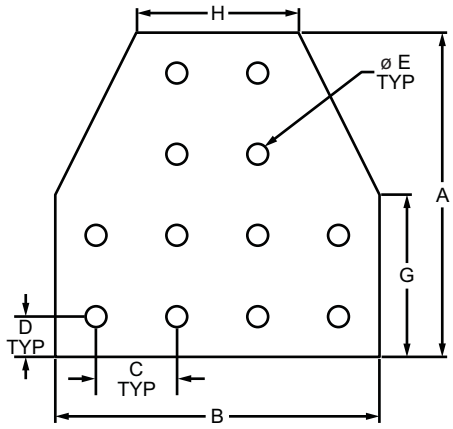

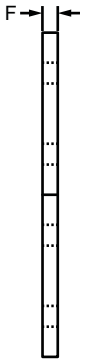

Part No.	Series	Material	Alloy*	Finish	A	B	C	D	E	F	G	H	Weight
4125	10	Aluminum	6105-T5	Clear Anodize	4.000"	4.000"	1.000"	.500"	.257"	.188"	2.000"	2.000"	.239 lb
4125-Black	10			Black Anodize	4.000"	4.000"	1.000"	.500"	.257"	.188"	2.000"	2.000"	.239 lb
4325	15			Clear Anodize	6.000"	6.000"	1.500"	.750"	.328"	.250"	3.000"	3.000"	.728 lb
4325-Black	15			Black Anodize	6.000"	6.000"	1.500"	.750"	.328"	.250"	3.000"	3.000"	.728 lb
25-4125	25			Clear Anodize	100.00mm	100.00mm	25.00mm	12.50mm	6.30mm	4.00mm	50.00mm	50.00mm	.0893 kg
25-4125-Black	25			Black Anodize	100.00mm	100.00mm	25.00mm	12.50mm	6.30mm	4.00mm	50.00mm	50.00mm	.0893 kg
40-4325	40			Clear Anodize	160.00mm	160.00mm	40.00mm	20.00mm	8.30mm	6.00mm	80.00mm	80.00mm	.3474 kg
40-4325-Black	40			Black Anodize	160.00mm	160.00mm	40.00mm	20.00mm	8.30mm	6.00mm	80.00mm	80.00mm	.3474 kg

* Or comparable

Suggested Hardware (Mount to T-Slot)

Part No.	Series	Qty.	Bolt	T-Nut
3321	10	12	1/4-20 x 1/2" FBHSCS	Economy
3320	15	12	5/16-18 x 11/16" FBHSCS	Economy
75-3404	25	12	M6 x 10mm BHSCS	Economy
75-3422	40	12	M8 x 16mm BHSCS	Economy

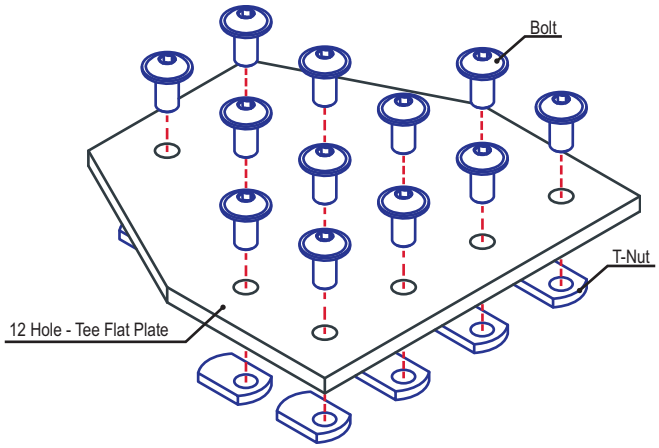

Part Description:

The 16 hole - tee flat plate is a strong, external fastening method that requires no machining services and can be used to connect more than two profiles together. This fastening option can provide infinite positioning along the profile T-slot, allowing for a large degree of adjustability. It is a long-lasting connection that is easily assembled and can be repositioned and reused. **Tip:** Use double or triple slide-in economy T-nuts (pg. 366-367) to save time and money. Pre-load your hardware prior to connecting profiles to simplify your assembly.

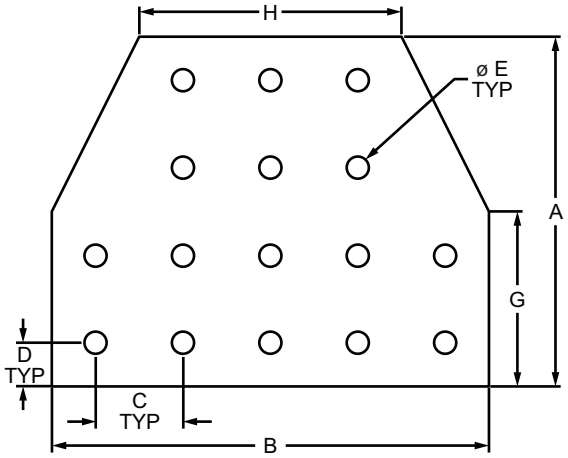

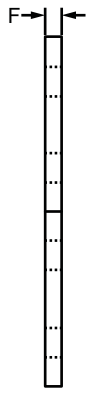

Part No.	Series	Material	Alloy*	Finish	A	B	C	D	E	F	G	H	Weight
4022	10	Aluminum	6105-T5	Clear Anodize	4.000"	5.000"	1.000"	.500"	.257"	.188"	2.000"	3.000"	.307 lb
4022-Black	10			Black Anodize	4.000"	5.000"	1.000"	.500"	.257"	.188"	2.000"	3.000"	.307 lb
4422	15			Clear Anodize	6.000"	7.500"	1.500"	.750"	.328"	.250"	3.000"	4.500"	.935 lb
4422-Black	15			Black Anodize	6.000"	7.500"	1.500"	.750"	.328"	.250"	3.000"	4.500"	.935 lb

* Or comparable

Suggested Hardware (Mount to T-Slot)

Part No.	Series	Qty.	Bolt	T-Nut
3321	10	16	1/4-20 x 1/2" FBHSCS	Economy
3320	15	16	5/16-18 x 11/16" FBHSCS	Economy

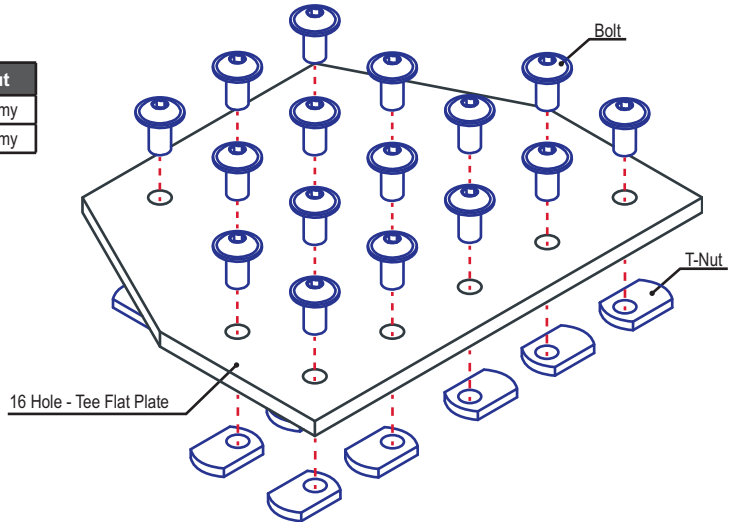

7 Hole - Cross Flat Plate

Part Description:

The 7 hole - cross flat plate is an external fastening method that can be used to join more than two profiles or even create a 4-way connection hub. It provides a strong, long-lasting connection that is easy to assemble and requires no machining services. The 7 hole - cross flat plate is durable and can be repositioned and reused. **Tip:** Use double or triple slide-in economy T-nuts (pg. 366-367) to save time and money. Pre-load your hardware prior to connecting profiles to simplify your assembly.

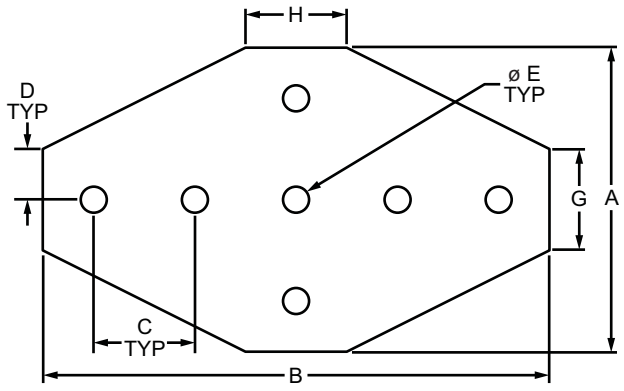

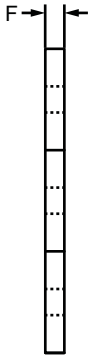

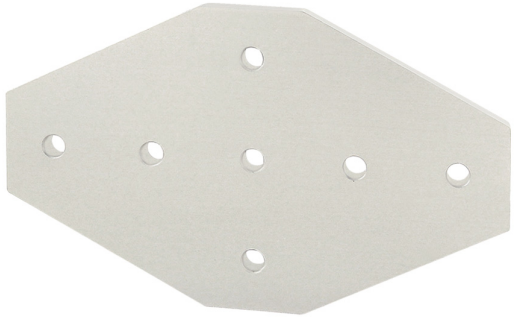

Part No.	Series	Material	Alloy*	Finish	A	B	C	D	E	F	G	H	Weight
4135	10	Aluminum	6105-T5	Clear Anodize	3.000"	5.000"	1.000"	.500"	.257"	.188"	1.000"	1.000"	.187 lb
4135-Black	10			Black Anodize	3.000"	5.000"	1.000"	.500"	.257"	.188"	1.000"	1.000"	.187 lb
4335	15			Clear Anodize	4.500"	7.500"	1.500"	.750"	.328"	.250"	1.500"	1.500"	.569 lb
4335-Black	15			Black Anodize	4.500"	7.500"	1.500"	.750"	.328"	.250"	1.500"	1.500"	.569 lb
25-4135	25			Clear Anodize	75.00mm	125.00mm	25.00mm	12.50mm	6.30mm	4.00mm	25.00mm	25.00mm	.0703 kg
25-4135-Black	25			Black Anodize	75.00mm	125.00mm	25.00mm	12.50mm	6.30mm	4.00mm	25.00mm	25.00mm	.0703 kg
30-4335	30			Clear Anodize	90.00mm	150.00mm	30.00mm	15.00mm	6.30mm	4.00mm	30.00mm	30.00mm	.1025 kg
30-4335-Black	30			Black Anodize	90.00mm	150.00mm	30.00mm	15.00mm	6.30mm	4.00mm	30.00mm	30.00mm	.1025 kg
40-4335	40			Clear Anodize	120.00mm	200.00mm	40.00mm	20.00mm	8.30mm	6.00mm	40.00mm	40.00mm	.2681 kg
40-4335-Black	40			Black Anodize	120.00mm	200.00mm	40.00mm	20.00mm	8.30mm	6.00mm	40.00mm	40.00mm	.2681 kg
45-4335	45			Clear Anodize	135.00mm	225.00mm	45.00mm	22.50mm	8.30mm	6.00mm	45.00mm	45.00mm	.3465 kg
45-4335-Black	45			Black Anodize	135.00mm	225.00mm	45.00mm	22.50mm	8.30mm	6.00mm	45.00mm	45.00mm	.3465 kg

* Or comparable

Suggested Hardware (Mount to T-Slot)

Part No.	Series	Qty.	Bolt	T-Nut
3321	10	7	1/4-20 x 1/2" FBHSCS	Economy
3320	15	7	5/16-18 x 11/16" FBHSCS	Economy
75-3404	25	7	M6 x 10mm BHSCS	Economy
75-3600	30	7	M6 x 12mm BHSCS	Drop-in
75-3422	40	7	M8 x 16mm BHSCS	Economy
75-3619	45	7	M8 x 18mm BHSCS	Drop-in

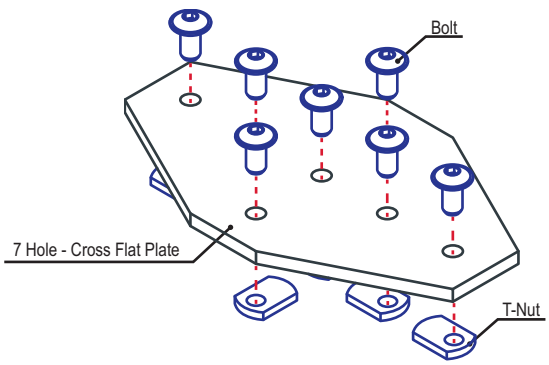

Part Description:

The 12 hole - cross flat plate is an external fastening method that can be used to join more than two profiles or even create a 4-way connection hub. It provides a strong, long-lasting connection that is easy to assemble and requires no machining services. The 12 hole - cross flat plate is durable and can be repositioned and reused. **Tip:** Use double or triple slide-in economy T-nuts (pg. 366-367) to save time and money. Pre-load your hardware prior to connecting profiles to simplify your assembly.

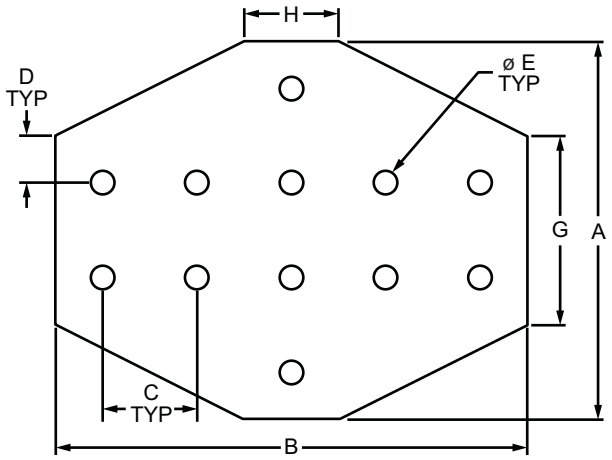

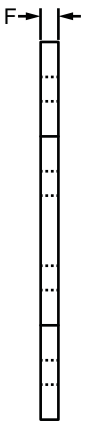

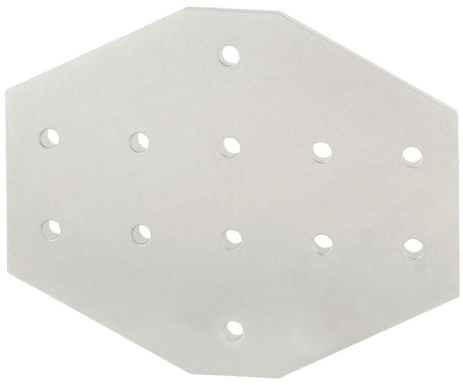

Part No.	Series	Material	Alloy*	Finish	A	B	C	D	E	F	G	H	Weight
4160	10	Aluminum	6105-T5	Clear Anodize	4.000"	5.000"	1.000"	.500"	.257"	.188"	2.000"	1.000"	.272 lb
4160-Black	10			Black Anodize	4.000"	5.000"	1.000"	.500"	.257"	.188"	2.000"	1.000"	.272 lb
4360	15			Clear Anodize	6.000"	7.500"	1.500"	.750"	.328"	.250"	3.000"	1.500"	.860 lb
4360-Black	15			Black Anodize	6.000"	7.500"	1.500"	.750"	.328"	.250"	3.000"	1.500"	.860 lb

* Or comparable

Suggested Hardware (Mount to T-Slot)

Part No.	Series	Qty.	Bolt	T-Nut
3321	10	12	1/4-20 x 1/2" FBHSCS	Economy
3320	15	12	5/16-18 x 11/16" FBHSCS	Economy

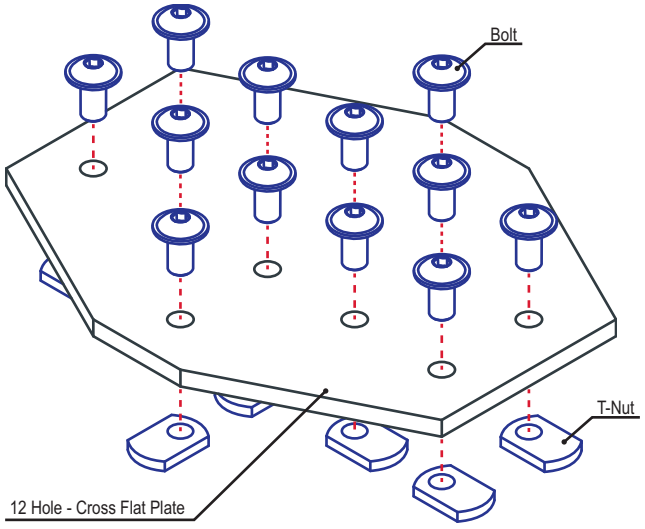

16 Hole - Cross Flat Plate

Part Description:

The 16 hole - cross flat plate is an external fastening method that can be used to join more than two profiles or even create a 4-way connection hub. It provides a strong, long-lasting connection that is easy to assemble and requires no machining services. The 16 hole - cross flat plate is durable and can be repositioned and reused. **Tip:** Use double or triple slide-in economy T-nuts (pg. 366-367) to save time and money. Pre-load your hardware prior to connecting profiles to simplify your assembly.

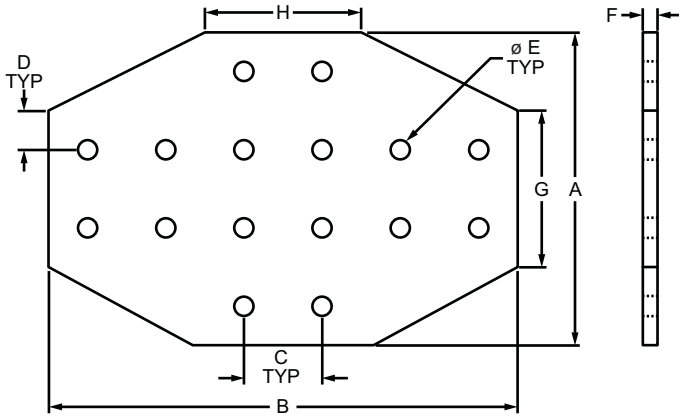

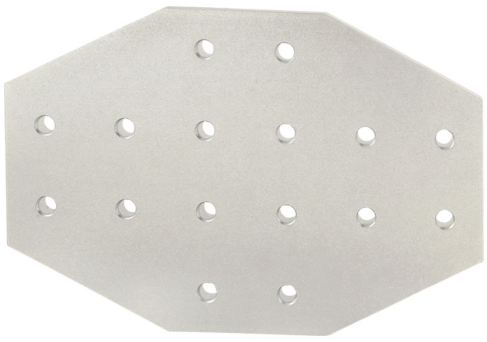

Part No.	Series	Material	Alloy*	Finish	A	B	C	D	E	F	G	H	Weight
4170	10	Aluminum	6105-T5	Clear Anodize	4.000"	6.000"	1.000"	.500"	.257"	.188"	2.000"	2.000"	.340 lb
4170-Black	10			Black Anodize	4.000"	6.000"	1.000"	.500"	.257"	.188"	2.000"	2.000"	.340 lb
4370	15			Clear Anodize	6.000"	9.000"	1.500"	.750"	.328"	.250"	3.000"	3.000"	1.040 lb
4370-Black	15			Black Anodize	6.000"	9.000"	1.500"	.750"	.328"	.250"	3.000"	3.000"	1.040 lb
25-4170	25			Clear Anodize	100.00mm	150.00mm	25.00mm	12.50mm	6.30mm	4.00mm	50.00mm	50.00mm	.1266 kg
25-4170-Black	25			Black Anodize	100.00mm	150.00mm	25.00mm	12.50mm	6.30mm	4.00mm	50.00mm	50.00mm	.1266 kg
40-4370	40			Clear Anodize	160.00mm	240.00mm	40.00mm	20.00mm	8.30mm	6.00mm	80.00mm	80.00mm	.4968 kg
40-4370-Black	40			Black Anodize	160.00mm	240.00mm	40.00mm	20.00mm	8.30mm	6.00mm	80.00mm	80.00mm	.4968 kg

* Or comparable

Suggested Hardware (Mount to T-Slot)

Part No.	Series	Qty.	Bolt	T-Nut
3321	10	16	1/4-20 x 1/2" FBHSCS	Economy
3320	15	16	5/16-18 x 11/16" FBHSCS	Economy
75-3404	25	16	M6 x 10mm BHSCS	Economy
75-3422	40	16	M8 x 16mm BHSCS	Economy

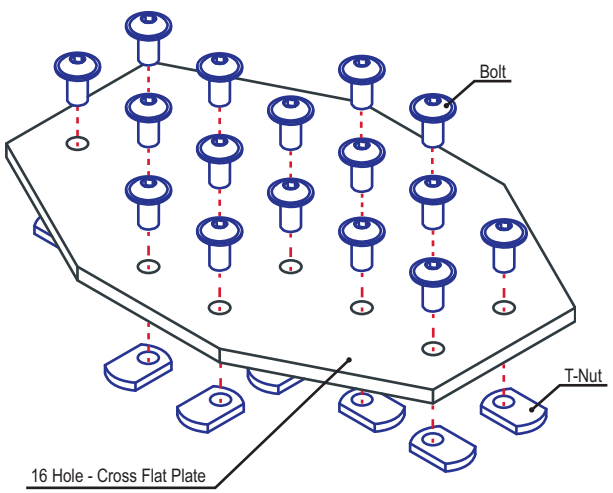

Part Description:

The 20 hole - cross flat plate is an external fastening method that can be used to join more than two profiles or even create a 4-way connection hub. It provides a strong, long-lasting connection that is easy to assemble and requires no machining services. The 20 hole - cross flat plate is durable and can be repositioned and reused. **Tip:** Use double or triple slide-in economy T-nuts (pg. 366-367) to save time and money. Pre-load your hardware prior to connecting profiles to simplify your assembly.

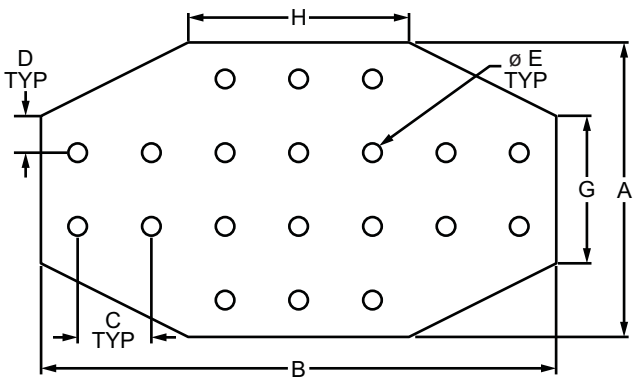

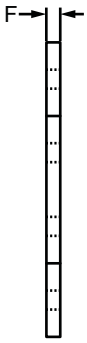

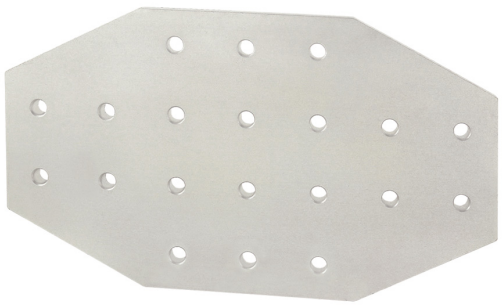

Part No.	Series	Material	Alloy*	Finish	A	B	C	D	E	F	G	H	Weight
4023	10	Aluminum	6105-T5	Clear Anodize	4.000"	7.000"	1.000"	.500"	.257"	.188"	2.000"	3.000"	.410 lb
4023-Black	10			Black Anodize	4.000"	7.000"	1.000"	.500"	.257"	.188"	2.000"	3.000"	.410 lb
4423	15			Clear Anodize	6.000"	10.500"	1.500"	.750"	.328"	.250"	3.000"	4.500"	1.291 lb
4423-Black	15			Black Anodize	6.000"	10.500"	1.500"	.750"	.328"	.250"	3.000"	4.500"	1.291 lb

* Or comparable

Suggested Hardware (Mount to T-Slot)

Part No.	Series	Qty.	Bolt	T-Nut
3321	10	20	1/4-20 x 1/2" FBHSCS	Economy
3320	15	20	5/16-18 x 11/16" FBHSCS	Economy

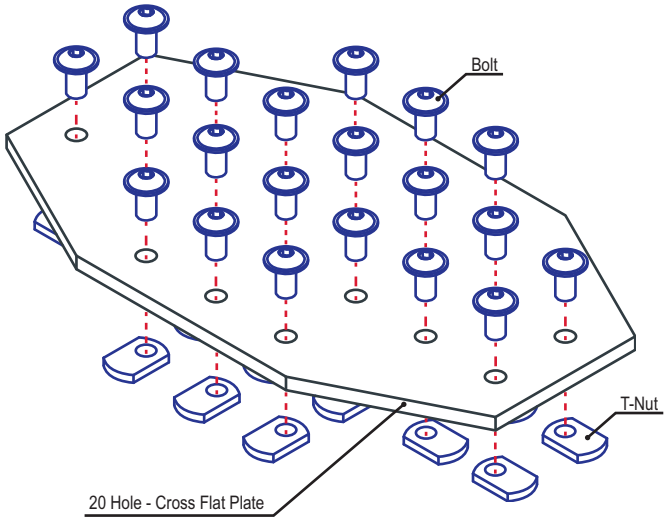

5 Hole - "L" Flat Plate

Part Description:

The 5 hole - "L" flat plate is a strong, external fastening method offering a long-lasting connection. This flat plate creates a 90º angle between profiles and is typically used to form a corner connection. The fastener is flush with the profiles, allowing for a larger clearance area. It requires no machining services, is easy to assemble, and can be reconfigured and reused. **Tip:** Use double or triple slide-in economy T-nuts (pg. 366-367) to save time and money. Pre-load your hardware prior to connecting profiles to simplify your assembly.

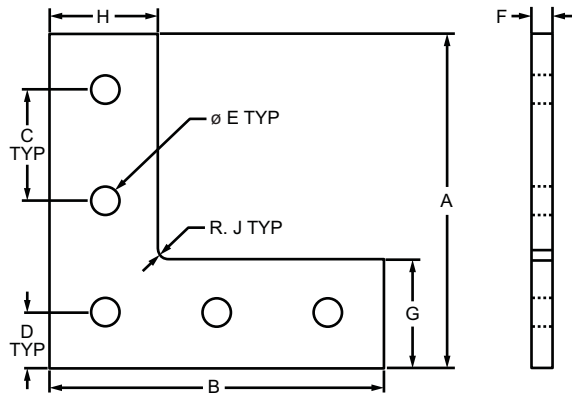

Part No.	Series	Material	Alloy*	Finish	A	B	C	D	E	F	G	H	J	Weight
4081	10	Aluminum	6105-T5	Clear Anodize	3.000"	3.000"	1.000"	.500"	.257"	.188"	.971"	.971"	.082"	.082 lb
4081-Black	10			Black Anodize	3.000"	3.000"	1.000"	.500"	.257"	.188"	.971"	.971"	.082"	.082 lb
4481	15			Clear Anodize	4.500"	4.500"	1.500"	.750"	.328"	.250"	1.464"	1.464"	.125"	.257 lb
4481-Black	15			Black Anodize	4.500"	4.500"	1.500"	.750"	.328"	.250"	1.464"	1.464"	.125"	.257 lb
20-4081	20			Clear Anodize	60.00mm	60.00mm	20.00mm	10.00mm	5.56mm	4.00mm	19.00mm	19.00mm	2.38mm	.0193 kg
20-4081-Black	20			Black Anodize	60.00mm	60.00mm	20.00mm	10.00mm	5.56mm	4.00mm	19.00mm	19.00mm	2.38mm	.0193 kg
25-4081	25			Clear Anodize	75.00mm	75.00mm	25.00mm	12.50mm	6.30mm	4.00mm	24.00mm	24.00mm	2.38mm	.0308 kg
25-4081-Black	25			Black Anodize	75.00mm	75.00mm	25.00mm	12.50mm	6.30mm	4.00mm	24.00mm	24.00mm	2.38mm	.0308 kg
30-4481	30			Clear Anodize	90.00mm	90.00mm	30.00mm	15.00mm	6.81mm	4.00mm	29.00mm	29.00mm	3.18mm	.0452 kg
30-4481-Black	30			Black Anodize	90.00mm	90.00mm	30.00mm	15.00mm	6.81mm	4.00mm	29.00mm	29.00mm	3.18mm	.0452 kg
40-4481	40			Clear Anodize	120.00mm	120.00mm	40.00mm	20.00mm	8.33mm	6.00mm	39.00mm	39.00mm	4.76mm	.1224 kg
40-4481-Black	40			Black Anodize	120.00mm	120.00mm	40.00mm	20.00mm	8.33mm	6.00mm	39.00mm	39.00mm	4.76mm	.1224 kg
45-4481	45			Clear Anodize	135.00mm	135.00mm	45.00mm	22.50mm	8.33mm	6.00mm	44.00mm	44.00mm	4.76mm	.1564 kg
45-4481-Black	45			Black Anodize	135.00mm	135.00mm	45.00mm	22.50mm	8.33mm	6.00mm	44.00mm	44.00mm	4.76mm	.1564 kg

* Or comparable

Suggested Hardware (Mount to T-Slot)

Part No.	Series	Qty.	Bolt	T-Nut
3321	10	5	1/4-20 x 1/2" FBHSCS	Economy
3320	15	5	5/16-18 x 11/16" FBHSCS	Economy
75-3656	20	5	M5 x 10mm BHSCS	Economy
75-3404	25	5	M6 x 10mm BHSCS	Economy
75-3600	30	5	M6 x 12mm BHSCS	Drop-in
75-3422	40	5	M8 x 16mm BHSCS	Economy
75-3619	45	5	M8 x 18mm BHSCS	Drop-in

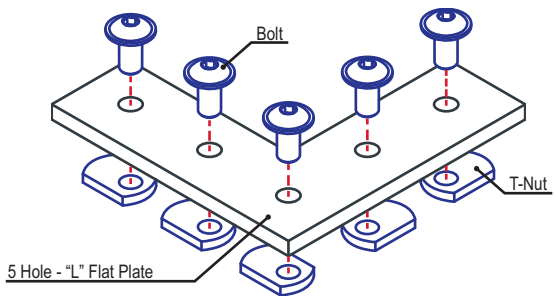

Part Description:

The 5 hole - "T" flat plate is a strong, external fastening method offering a long-lasting connection. This flat plate creates a 90 degree angle between connecting profiles. The fastener is flush with the profiles, allowing for a larger clearance area. It requires no machining services, is easy to assemble, and can be reconfigured and reused. **Tip:** Use double or triple slide-in economy T-nuts (pg. 366-367) to save time and money. Pre-load your hardware prior to connecting profiles to simplify your assembly.

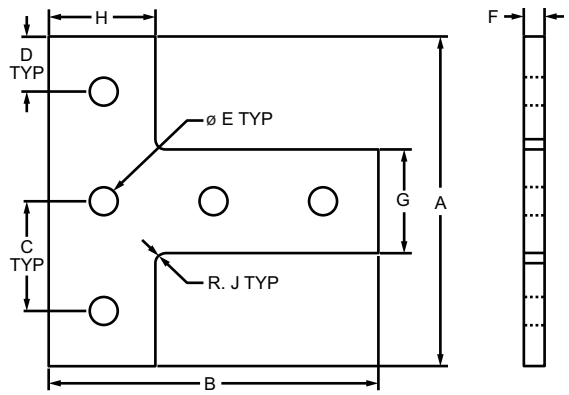

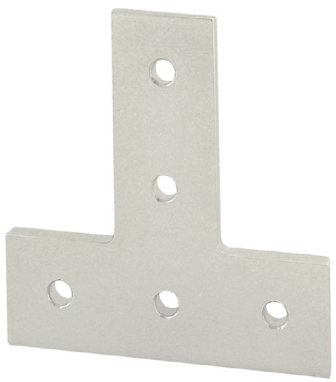

Part No.	Series	Material	Alloy*	Finish	A	B	C	D	E	F	G	H	J	Weight
4080	10	Aluminum	6105-T5	Clear Anodize	3.000"	3.000"	1.000"	.500"	.257"	.188"	.942"	.971"	.094"	.081 lb
4080-Black	10			Black Anodize	3.000"	3.000"	1.000"	.500"	.257"	.188"	.942"	.971"	.094"	.081 lb
4480	15			Clear Anodize	4.500"	4.500"	1.500"	.750"	.328"	.250"	1.426"	1.463"	.125"	.247 lb
4480-Black	15			Black Anodize	4.500"	4.500"	1.500"	.750"	.328"	.250"	1.426"	1.463"	.125"	.247 lb
20-4080	20			Clear Anodize	60.00mm	60.00mm	20.00mm	10.00mm	5.56mm	4.00mm	18.00mm	19.00mm	2.38mm	.0189 kg
20-4080-Black	20			Black Anodize	60.00mm	60.00mm	20.00mm	10.00mm	5.56mm	4.00mm	18.00mm	19.00mm	2.38mm	.0189 kg
25-4080	25			Clear Anodize	75.00mm	75.00mm	25.00mm	12.50mm	6.30mm	4.00mm	23.00mm	24.00mm	2.38mm	.0303 kg
25-4080-Black	25			Black Anodize	75.00mm	75.00mm	25.00mm	12.50mm	6.30mm	4.00mm	23.00mm	24.00mm	2.38mm	.0303 kg
30-4480	30			Clear Anodize	90.00mm	90.00mm	30.00mm	15.00mm	6.81mm	4.00mm	28.00mm	29.00mm	3.18mm	.0445 kg
30-4480-Black	30			Black Anodize	90.00mm	90.00mm	30.00mm	15.00mm	6.81mm	4.00mm	28.00mm	29.00mm	3.18mm	.0445 kg
40-4480	40			Clear Anodize	120.00mm	120.00mm	40.00mm	20.00mm	8.33mm	6.00mm	38.00mm	39.00mm	4.76mm	.1211 kg
40-4480-Black	40			Black Anodize	120.00mm	120.00mm	40.00mm	20.00mm	8.33mm	6.00mm	38.00mm	39.00mm	4.76mm	.1211 kg
45-4480	45			Clear Anodize	135.00mm	135.00mm	45.00mm	22.50mm	8.33mm	6.00mm	43.00mm	44.00mm	4.76mm	.1550 kg
45-4480-Black	45			Black Anodize	135.00mm	135.00mm	45.00mm	22.50mm	8.33mm	6.00mm	43.00mm	44.00mm	4.76mm	.1550 kg

* Or comparable

Suggested Hardware (Mount to T-Slot)

Part No.	Series	Qty.	Bolt	T-Nut
3321	10	5	1/4-20 x 1/2" FBHSCS	Economy
3320	15	5	5/16-18 x 11/16" FBHSCS	Economy
75-3656	20	5	M5 x 10mm BHSCS	Economy
75-3404	25	5	M6 x 10mm BHSCS	Economy
75-3600	30	5	M6 x 12mm BHSCS	Drop-in
75-3422	40	5	M8 x 16mm BHSCS	Economy
75-3619	45	5	M8 x 18mm BHSCS	Drop-in

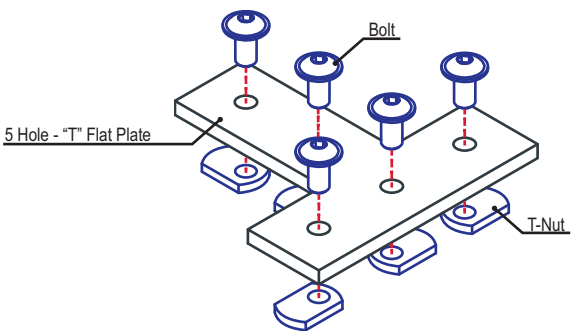

2 Hole - Lite Inside Corner Bracket

Part Description:

The 2 hole - lite inside corner bracket is an external fastening method that creates a 90 degree connection. It is a lightweight bracket that requires no machining services and can provide infinite positioning along the profile T-slot, allowing a large degree of adjustability. The 2 hole - lite inside corner bracket engages the 2-degree drop-lock feature when the assembly bolts are tightened to the required torque. It is a fastening method that can be repositioned and reused.

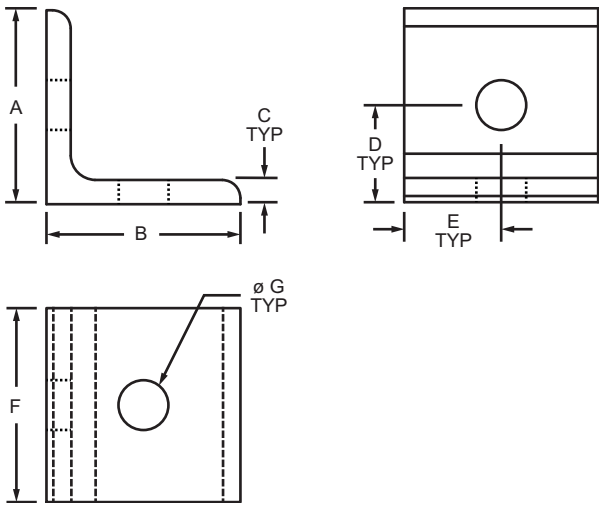

Part No.	Series	Material	Alloy*	Finish	A	B	C	D	E	F	G	Weight
4108	10	Aluminum	6105-T5	Clear Anodize	1.000"	1.000"	.125"	.500"	.500"	1.000"	.257"	.021 lb
4108-Black	10			Black Anodize	1.000"	1.000"	.125"	.500"	.500"	1.000"	.257"	.021 lb
25-4108	25			Clear Anodize	25.00mm	25.00mm	3.00mm	12.50mm	12.50mm	25.00mm	6.30mm	.0086 kg
25-4108-Black	25			Black Anodize	25.00mm	25.00mm	3.00mm	12.50mm	12.50mm	25.00mm	6.30mm	.0086 kg

* Or comparable

Suggested Hardware (Mount to T-Slot)

Part No.	Series	Qty.	Bolt	T-Nut
3386	10	2	1/4-20 x 3/8" FBHSCS	Economy
75-3404	25	2	M6 x 10mm BHSCS	Economy

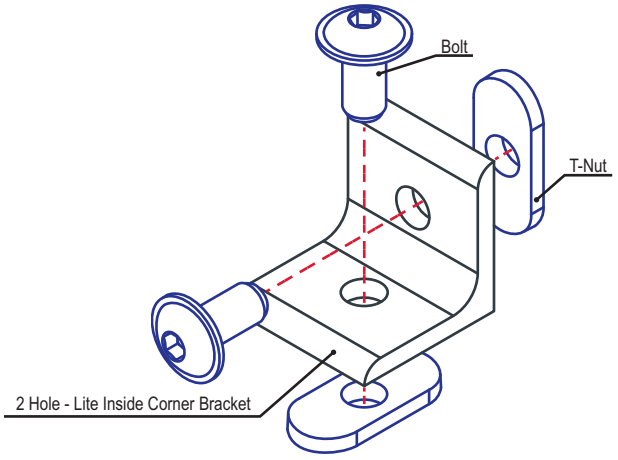

Part Description:

The 2 hole - inside corner bracket is an external fastening method that creates a 90 degree connection. It requires no machining services and can provide infinite positioning along the profile T-slot, allowing a large degree of adjustability. It is a fastening method that can be repositioned and reused.

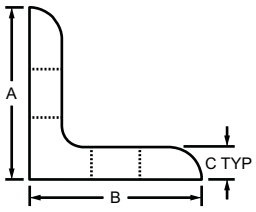

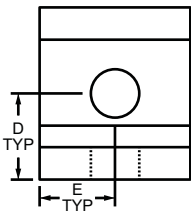

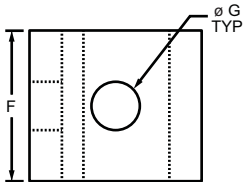

Part No.	Series	Material	Alloy*	Finish	A	B	C	D	E	F	G	Weight
4119	10	Aluminum	6105-T5	Clear Anodize	1.000"	1.000"	.188"	.500"	.438"	.875"	.281"	.025 lb
4119-Black	10			Black Anodize	1.000"	1.000"	.188"	.500"	.438"	.875"	.281"	.025 lb
4302	15			Clear Anodize	1.500"	1.500"	.250"	.750"	.655"	1.310"	.328"	.081 lb
4302-Black	15			Black Anodize	1.500"	1.500"	.250"	.750"	.655"	1.310"	.328"	.081 lb
20-4119	20			Clear Anodize	20.00mm	20.00mm	3.00mm	10.00mm	9.00mm	18.00mm	5.56mm	.0049 kg
20-4119-Black	20			Black Anodize	20.00mm	20.00mm	3.00mm	10.00mm	9.00mm	18.00mm	5.56mm	.0049 kg
25-4119	25			Clear Anodize	25.00mm	25.00mm	4.00mm	12.50mm	11.00mm	22.00mm	6.80mm	.0095 kg
25-4119-Black	25			Black Anodize	25.00mm	25.00mm	4.00mm	12.50mm	11.00mm	22.00mm	6.80mm	.0095 kg
30-4302	30			Clear Anodize	30.00mm	30.00mm	4.00mm	15.00mm	13.50mm	27.00mm	6.81mm	.0153 kg
30-4302-Black	30			Black Anodize	30.00mm	30.00mm	4.00mm	15.00mm	13.50mm	27.00mm	6.81mm	.0153 kg
40-4302	40			Clear Anodize	40.00mm	40.00mm	6.00mm	20.00mm	18.00mm	36.00mm	8.30mm	.0408 kg
40-4302-Black	40			Black Anodize	40.00mm	40.00mm	6.00mm	20.00mm	18.00mm	36.00mm	8.30mm	.0408 kg
45-4302	45			Clear Anodize	45.00mm	45.00mm	6.00mm	22.50mm	21.00mm	42.00mm	8.33mm	.0543 kg
45-4302-Black	45			Black Anodize	45.00mm	45.00mm	6.00mm	22.50mm	21.00mm	42.00mm	8.33mm	.0543 kg

* Or comparable

Suggested Hardware (Mount to T-Slot)

Series	Part No.	Qty.	Bolt	Part No.	Qty.	T-Nut
10	3061	2	1/4-20 x 1/2" BHSCS	3382	2	Economy
15	3330	2	5/16-18 x 11/16" FBHSCS	3278	2	Economy
20	11-5308	2	M5 x 8mm BHSCS	14122	2	Economy
25	13-6310	2	M6 x 10mm BHSCS	3859	2	Economy
30	11-6312	2	M6 x 12mm BHSCS	13117	2	Drop-in
40	13-8316	2	M8 x 16mm BHSCS	3838	2	Economy
45	11-8318	2	M8 x 18mm BHSCS	13132	2	Drop-in

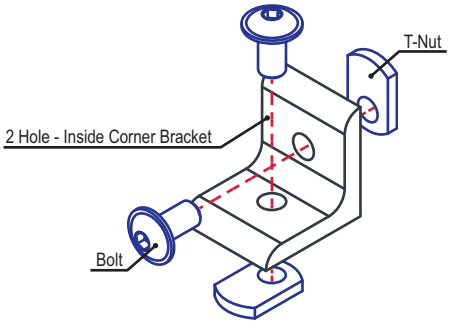

2 Hole - Slotted Inside Corner Bracket

Part Description:

The 2 hole - slotted inside corner bracket is an external fastening method that creates a 90 degree connection. The slotted hole allows for greater adjustability between the connecting profiles. This bracket requires no machining services and can provide infinite positioning along the profile T-slot. The 2 hole - slotted inside corner bracket engages the 2-degree drop-lock feature when the assembly bolts are tightened to the required torque. It is a fastening method that can be repositioned and reused.

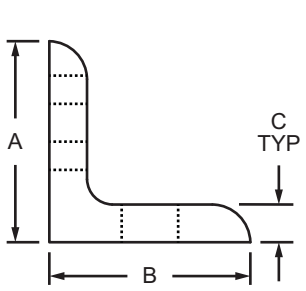

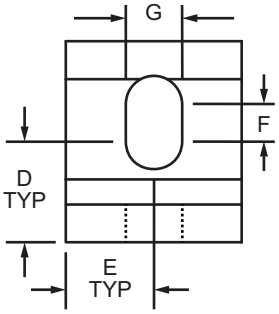

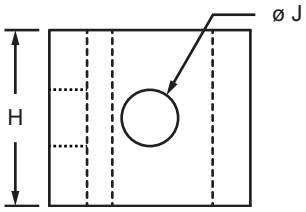

Part No.	Series	Material	Alloy*	Finish	A	B	C	D	E	F	G	H	J	Weight
4265	10	Aluminum	6105-T5	Clear Anodize	1.000"	1.000"	.188"	.500"	.438"	.188"	.281"	.875"	.281"	.024 lb
4265-Black	10			Black Anodize	1.000"	1.000"	.188"	.500"	.438"	.188"	.281"	.875"	.281"	.024 lb
4295	15			Clear Anodize	1.500"	1.500"	.250"	.500"	.656"	.500"	.328"	1.312"	.328"	.078 lb
4295-Black	15			Black Anodize	1.500"	1.500"	.250"	.500"	.656"	.500"	.328"	1.312"	.328"	.078 lb
25-4265	25			Clear Anodize	25.00mm	25.00mm	4.00mm	12.50mm	11.00mm	11.63mm	6.80mm	22.00mm	6.80mm	.0095 kg
25-4265-Black	25			Black Anodize	25.00mm	25.00mm	4.00mm	12.50mm	11.00mm	11.63mm	6.80mm	22.00mm	6.80mm	.0095 kg
40-4295	40			Clear Anodize	40.00mm	40.00mm	6.00mm	14.00mm	18.00mm	14.00mm	8.30mm	36.00mm	8.30mm	.0386 kg
40-4295-Black	40			Black Anodize	40.00mm	40.00mm	6.00mm	14.00mm	18.00mm	14.00mm	8.30mm	36.00mm	8.30mm	.0386 kg

* Or comparable

Suggested Hardware (Mount to T-Slot)

Part No.	Series	Qty.	Bolt	T-Nut
3393	10	2	1/4-20 x 1/2" BHSCS	Economy
3320	15	2	5/16-18 x 11/16" FBHSCS	Economy
75-3404	25	2	M6 x 10mm BHSCS	Economy
75-3422	40	2	M8 x 16mm BHSCS	Economy

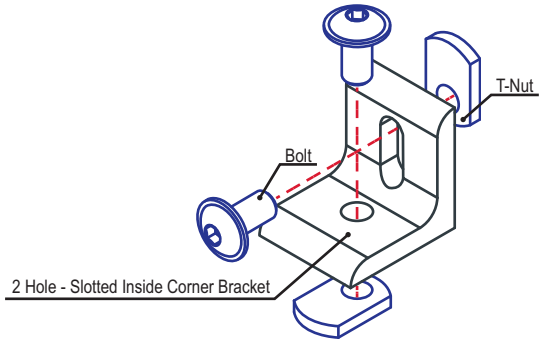

2 Hole - Inside Corner Bracket with Single Support

Part Description:

The 2 hole - inside corner bracket with single support is an external fastening method that creates a 90 degree connection. The single support provides additional strength while the slotted mounting holes allow for greater adjustability between the connecting profiles. This bracket requires no machining services and can provide infinite positioning along the profile T-slot.

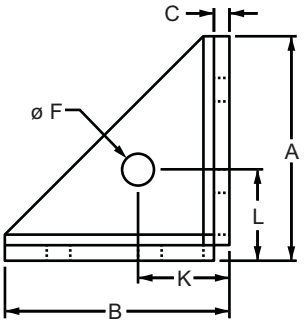

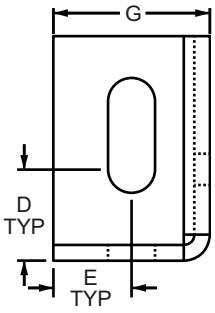

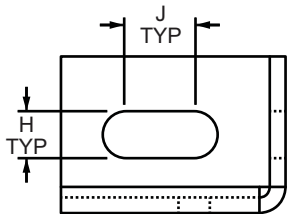

Part No.	Series	Material	Finish	A	B	C	D	E	F	G	H	J	K	L	Weight
14120	15 40	Steel	Zinc	43.00mm	43.00mm	3.00mm	17.50mm	15.00mm	6.00mm	30.00mm	9.00mm	13.00mm	17.50mm	17.50mm	.2626 kg

Suggested Hardware (Mount to T-Slot)

Part No.	Series	Qty.	Bolt	T-Nut
3450	15	2	5/16-18 x 1/2" SHCS	Economy
75-3624	40	2	M8 x 12mm SHCS	Slide-In

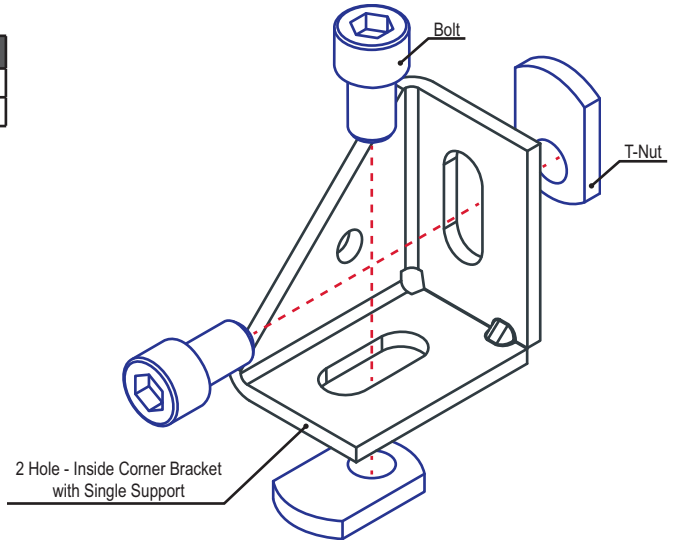

2 Hole - 18mm Slotted Inside Corner Bracket with Dual Support

Part Description:

The 2 hole - 18mm slotted inside corner bracket with dual support is an external, die-cast fastening method that creates a 90 degree connection. The dual support provides additional strength while the slotted holes allow for greater adjustability. Options with a slot tab help line up the profile with the bracket and prevent rotation. It requires no machining and can provide infinite positioning along the profile T-slot. **Additional Information:** Corner bracket covers are available separately and inhibit debris buildup while providing a finished look.

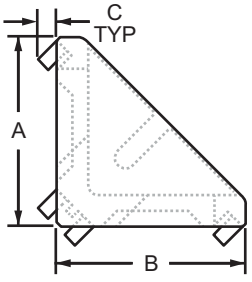

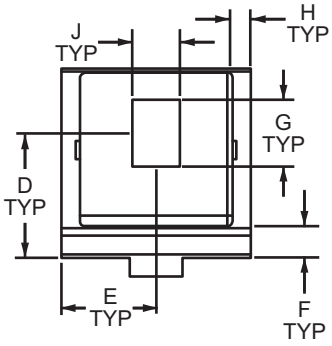

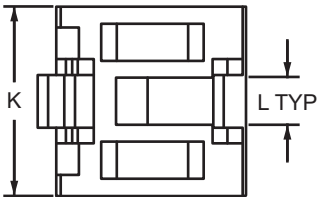

Part No.	Series	Material	Finish	A	B	C	D	E	F	G	H	J	K	L	Weight
14059*	10 20 25	Aluminum	Natural	18.00mm	18.00mm	—	10.50mm	9.00mm	3.00mm	7.00mm	2.00mm	5.30mm	18.00mm	—	.0043 kg
14060	20			18.00mm	18.00mm	2.00mm	10.50mm	9.00mm	3.00mm	7.00mm	2.00mm	5.30mm	18.00mm	4.75mm	.0044 kg
14061	10 25			18.00mm	18.00mm	2.00mm	10.50mm	9.00mm	3.00mm	7.00mm	2.00mm	5.30mm	18.00mm	6.00mm	.0045 kg

* No slot tabs available

Suggested Hardware (Mount to T-Slot)

Part No.	Series	Qty.	Bolt	T-Nut
3457	10	2	10-32 x 3/8" SHCS	Econ. Slide-In
75-3581	20	2	M5 x 8mm BHSCS	Econ. Slide-In
75-3401	25	2	M5 x 10mm SHCS	Econ. Slide-In

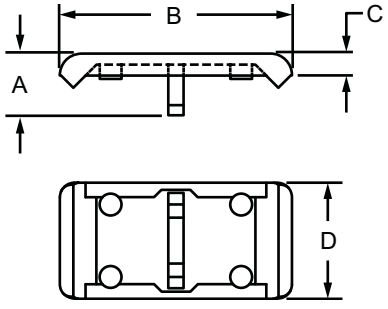

2 hole - 18mm Slotted Inside Corner Bracket Cover Cap

Part No.	Series	Material	A	B	C	D	Weight
12031	10 20 25	PA6 GF 30	9.50mm	28.60mm	2.00mm	17.60mm	.0018 kg

2 Hole - 20mm Slotted Inside Corner Bracket with Dual Support

Part Description:

The 2 hole - 20mm slotted inside corner bracket with dual support is an external, die-cast fastening method that creates a 90 degree connection. The dual support provides additional strength while the slotted holes allow for greater adjustability. Options with a slot tab help line up the profile with the bracket and prevent rotation. It requires no machining and can provide infinite positioning along the profile T-slot. **Additional Information:** Corner bracket covers are available separately and inhibit debris buildup while providing a finished look.

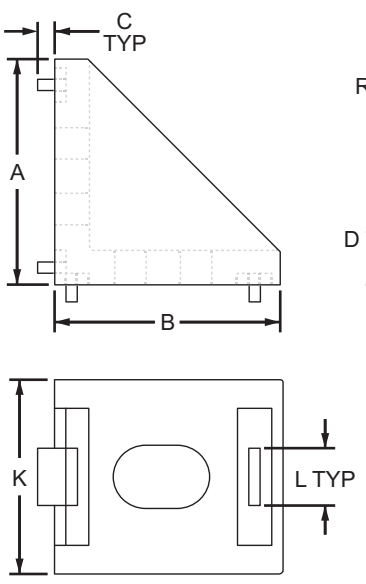

Part No.	Series	Material	Finish	A	B	C	D	E	F	G	H	J	K	L	Weight
14051	20	Zinc	Powder Coat	20.00mm	20.00mm	—	8.00mm	8.50mm	3.00mm	5.00mm	2.40mm	3.10mm	17.00mm	—	.0131 kg
14052	20		Powder Coat	20.00mm	20.00mm	1.00mm	8.00mm	8.50mm	3.00mm	5.00mm	2.40mm	3.10mm	17.00mm	5.00mm	.0104 kg
14053	20		Natural	20.00mm	20.00mm	1.00mm	8.00mm	8.50mm	3.00mm	5.00mm	2.40mm	3.10mm	17.00mm	5.00mm	.0125 kg
14054	10 25		Powder Coat	20.00mm	20.00mm	1.00mm	8.00mm	8.50mm	3.00mm	5.00mm	2.40mm	3.10mm	17.00mm	6.00mm	.0136 kg
14056	20		Natural	20.00mm	20.00mm	—	8.00mm	8.50mm	3.00mm	5.00mm	2.40mm	3.10mm	17.00mm	—	.0116 kg

Suggested Hardware (Mount to T-Slot)

Part No.	Series	Qty.	Bolt	T-Nut
3457	10	2	10-32 x 3/8" SHCS	Econ. Slide-In
75-3581	20	2	M5 x 8mm BHSCS	Econ. Slide-In
75-3401	25	2	M5 x 10mm SHCS	Econ. Slide-In

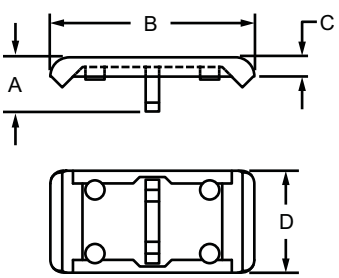

2 Hole - 20mm Slotted Inside Corner Bracket Cover Cap

Part No.	Series	Material	A	B	C	D	Weight
12030	10 20 25	PA6 GF 30	8.50mm	32.00mm	3.00mm	16.00mm	.0018 kg

2 Hole - 27mm Slotted Inside Corner Bracket with Dual Support

Part Description:

The 2 hole - 27mm slotted inside corner bracket with dual support is an external, die-cast fastening method that creates a 90 degree connection. The dual support provides additional strength while the slotted holes allow for greater adjustability. Options with a slot tab help line up the profile with the bracket and prevent rotation. It requires no machining and can provide infinite positioning along the profile T-slot. **Additional Information:** Corner bracket covers are available separately and inhibit debris buildup while providing a finished look.

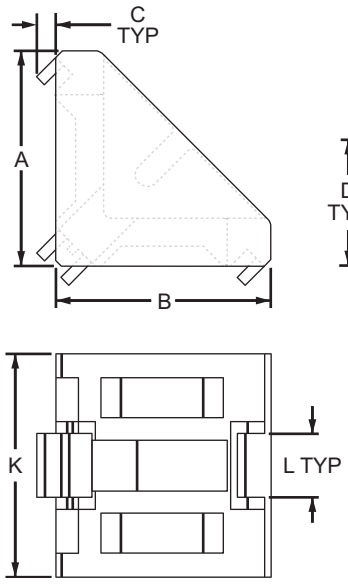

Part No.	Series	Material	Finish	A	B	C	D	E	F	G	H	J	K	L	Weight
14071	30	Aluminum	Natural	27.00mm	27.00mm	—	15.87mm	14.00mm	5.82mm	11.26mm	3.00mm	6.40mm	28.00mm	—	.0184 kg
14073	30			27.00mm	27.00mm	2.40mm	15.87mm	14.00mm	5.82mm	11.26mm	3.00mm	6.40mm	28.00mm	8.00mm	.0186 kg

Suggested Hardware (Mount to T-Slot)

Part No.	Series	Qty.	Bolt	T-Nut
75-3593	30	2	M6 x 14mm SHCS	Drop-In

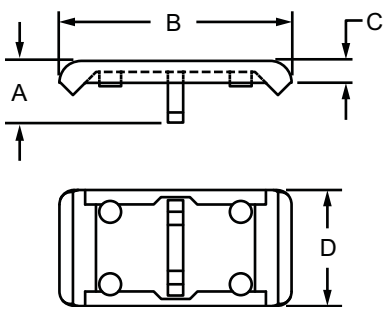

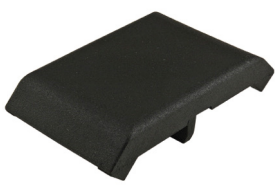

2 hole - 27mm Slotted Inside Corner Bracket Cover Cap

Part No.	Series	Material	A	B	C	D	Weight
12033	30	PA6 GF 30	13.00mm	45.00mm	6.00mm	27.00mm	.0059 kg

2 Hole - 28mm Slotted Inside Corner Bracket with Dual Support

Part Description:

The 2 hole - 28mm slotted inside corner bracket with dual support is an external, die-cast fastening method that creates a 90 degree connection. The dual support provides additional strength while the slotted holes allow for greater adjustability. Options with a slot tab help line up the profile with the bracket and prevent rotation. It requires no machining and can provide infinite positioning along the profile T-slot. **Additional Information:** Corner bracket covers are available separately and inhibit debris buildup while providing a finished look.

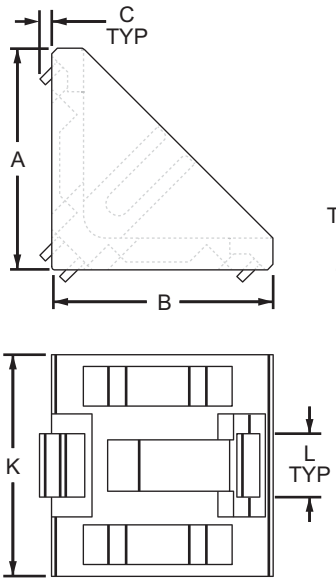

Part No.	Series	Material	Finish	A	B	C	D	E	F	G	H	J	K	L	Weight
14067	30	Zinc	Natural	28.00mm	28.00mm	—	16.79mm	14.00mm	4.00mm	11.43mm	2.50mm	6.50mm	28.00mm	—	.0382 kg
14062	30		Powder Coat	28.00mm	28.00mm	—	16.79mm	14.00mm	4.00mm	11.43mm	2.50mm	6.50mm	28.00mm	—	.0394 kg
14066	30		Natural	28.00mm	28.00mm	1.49mm	16.79mm	14.00mm	4.00mm	11.43mm	2.50mm	6.50mm	28.00mm	8.00mm	.0386 kg
14065	30		Powder Coat	28.00mm	28.00mm	1.49mm	16.79mm	14.00mm	4.00mm	11.43mm	2.50mm	6.50mm	28.00mm	8.00mm	.0400 kg

Suggested Hardware (Mount to T-Slot)

Part No.	Series	Qty.	Bolt	T-Nut
75-3598	30	2	M6 x 14mm SHCS	Drop-In

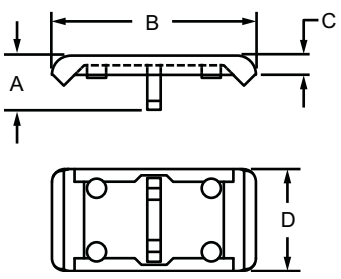

2 Hole - 28mm Slotted Inside Corner Bracket Cover Cap

Part No.	Series	Material	A	B	C	D	Weight
12032	30	PA6 GF 30	14.00mm	44.60mm	4.00mm	27.60mm	.0025 kg

2 Hole - 39mm Slotted Inside Corner Bracket with Dual Support

Part Description:

The 2 hole - 39mm slotted inside corner bracket with dual support is an external, die-cast fastening method that creates a 90 degree connection. The dual support provides additional strength while the slotted holes allow for greater adjustability. Options with a slot tab help line up the profile with the bracket and prevent rotation. It requires no machining and can provide infinite positioning along the profile T-slot. **Additional Information:** Corner bracket covers are available separately and inhibit debris buildup while providing a finished look.

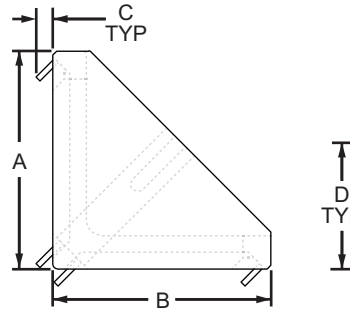

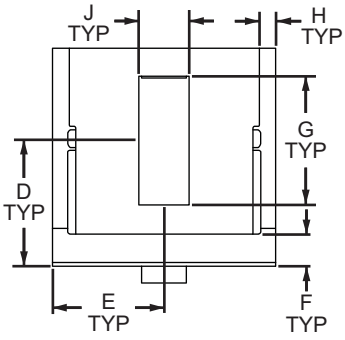

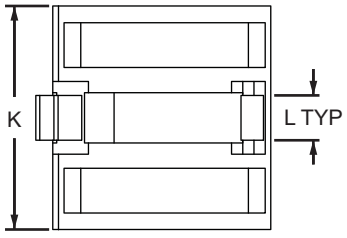

Part No.	Series	Material	Finish	A	B	C	D	E	F	G	H	J	K	L	Weight
14079	40	Zinc	Natural	39.00mm	39.00mm	—	22.47mm	20.00mm	6.00mm	23.05mm	3.00mm	9.00mm	40.00mm	—	.0948 kg
14074	40		Powder Coat	39.00mm	39.00mm	—	22.47mm	20.00mm	6.00mm	23.05mm	3.00mm	9.00mm	40.00mm	—	.0962 kg
14076	40		Natural	39.00mm	39.00mm	3.02mm	22.47mm	20.00mm	6.00mm	23.05mm	3.00mm	9.00mm	40.00mm	8.00mm	.0898 kg
14075	40		Powder Coat	39.00mm	39.00mm	3.02mm	22.47mm	20.00mm	6.00mm	23.05mm	3.00mm	9.00mm	40.00mm	8.00mm	.0981 kg
14078	45		Natural	39.00mm	39.00mm	3.02mm	22.47mm	20.00mm	6.00mm	23.05mm	3.00mm	9.00mm	40.00mm	10.00mm	.0966 kg
14077	45		Powder Coat	39.00mm	39.00mm	3.02mm	22.47mm	20.00mm	6.00mm	23.05mm	3.00mm	9.00mm	40.00mm	10.00mm	.0980 kg

Suggested Hardware (Mount to T-Slot)

Part No.	Series	Qty.	Bolt	T-Nut
75-3625	40	2	M8 x 16mm SHCS	Slide-In
75-3626	45	2	M8 x 18mm SHCS	Drop-In

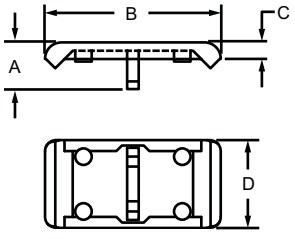

2 Hole - 39mm Slotted Inside Corner Bracket Cover Cap

Part No.	Series	Material	A	B	C	D	Weight
12034	40 45	PA6 GF 30	14.00mm	64.00mm	4.00mm	39.60mm	.0572 kg

2 Hole - 42mm Slotted Inside Corner Bracket with Dual Support

Part Description:

The 2 hole- 42mm slotted inside corner bracket with dual support is an external, die-cast fastening method that creates a 90 degree connection. The dual support provides additional strength while the slotted holes allow for greater adjustability. Options with a slot tab help line up the profile with the bracket and prevent rotation. It requires no machining and can provide infinite positioning along the profile T-slot. **Additional Information:** Corner bracket covers are available separately and inhibit debris buildup while providing a finished look.

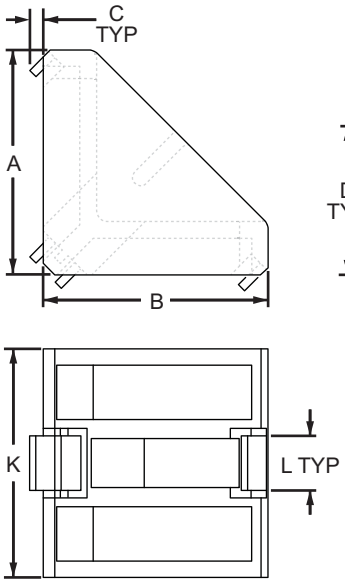

Part No.	Series	Material	Finish	A	B	C	D	E	F	G	H	J	K	L	Weight
14083	45	Aluminum	Natural	41.30mm	41.30mm	—	27.32mm	21.00mm	9.80mm	17.36mm	3.50mm	9.00mm	42.00mm	—	.0500 kg
14085	45	Aluminum		41.30mm	41.30mm	2.46mm	27.32mm	21.00mm	9.80mm	17.36mm	3.50mm	9.00mm	42.00mm	10.00mm	.0513 kg
14092	45	Zinc		41.30mm	41.30mm	2.46mm	27.32mm	21.00mm	9.80mm	17.36mm	3.50mm	9.00mm	42.00mm	10.00mm	.1287 kg

Suggested Hardware (Mount to T-Slot)

Part No.	Series	Qty.	Bolt	T-Nut
75-3630	45	2	M8 x 20mm SHCS	Drop-In

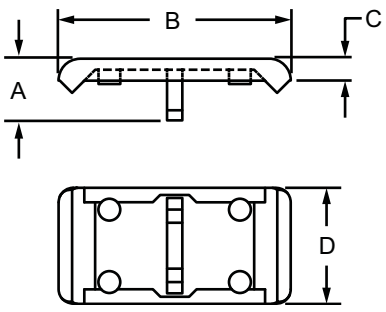

2 hole - 42mm Slotted Inside Corner Bracket Cover Cap

Part No.	Series	Material	A	B	C	D	Weight
12035	45	PA6 GF 30	20.00mm	70.00mm	3.00mm	42.20mm	.0173 kg

3 Hole - Inside Corner Bracket

Part Description:

The 3 hole - inside corner bracket is an external fastening method that creates a 90 degree connection. There are two stacked holes on one side and one hole on the opposite side of the bracket. This fastener requires no machining services and can provide infinite positioning along the profile T-slot, allowing a large degree of adjustability. It is a fastening method that can be repositioned and reused.

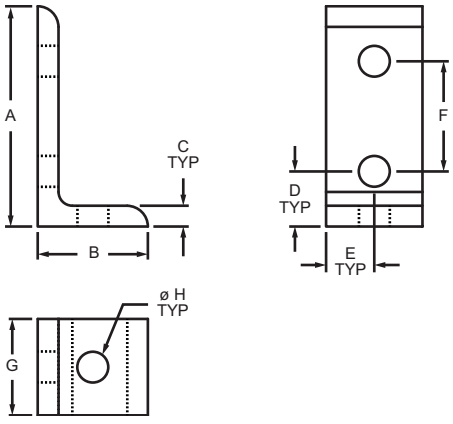

Part No.	Series	Material	Alloy*	Finish	A	B	C	D	E	F	G	H	Weight
4176	10	Aluminum	6105-T5	Clear Anodize	2.000"	1.000"	.188"	.500"	.438"	1.000"	.875"	.281"	.039 lb
4176-Black	10			Black Anodize	2.000"	1.000"	.188"	.500"	.438"	1.000"	.875"	.281"	.039 lb
4376	15			Clear Anodize	3.000"	1.500"	.250"	.750"	.655"	1.500"	1.310"	.328"	.126 lb
4376-Black	15			Black Anodize	3.000"	1.500"	.250"	.750"	.655"	1.500"	1.310"	.328"	.126 lb
20-4176	20			Clear Anodize	40.00mm	18.00mm	3.00mm	10.00mm	9.00mm	20.00mm	18.00mm	5.56mm	.0076 kg
20-4176-Black	20			Black Anodize	40.00mm	18.00mm	3.00mm	10.00mm	9.00mm	20.00mm	18.00mm	5.56mm	.0076 kg
25-4176	25			Clear Anodize	50.00mm	25.00mm	4.00mm	12.50mm	11.00mm	25.00mm	22.00mm	6.80mm	.0150 kg
25-4176-Black	25			Black Anodize	50.00mm	25.00mm	4.00mm	12.50mm	11.00mm	25.00mm	22.00mm	6.80mm	.0150 kg
30-4376	30			Clear Anodize	60.00mm	30.00mm	4.00mm	15.00mm	13.50mm	30.00mm	27.00mm	6.81mm	.0236 kg
30-4376-Black	30			Black Anodize	60.00mm	30.00mm	4.00mm	15.00mm	13.50mm	30.00mm	27.00mm	6.81mm	.0236 kg
40-4376	40			Clear Anodize	80.00mm	40.00mm	6.00mm	20.00mm	18.00mm	40.00mm	36.00mm	8.30mm	.0617 kg
40-4376-Black	40			Black Anodize	80.00mm	40.00mm	6.00mm	20.00mm	18.00mm	40.00mm	36.00mm	8.30mm	.0617 kg
45-4376	45			Clear Anodize	90.00mm	45.00mm	6.00mm	22.50mm	21.00mm	45.00mm	42.00mm	8.33mm	.0841 kg
45-4376-Black	45			Black Anodize	90.00mm	45.00mm	6.00mm	22.50mm	21.00mm	45.00mm	42.00mm	8.33mm	.0841 kg

* Or comparable

Suggested Hardware (Mount to T-Slot)

Series	Part No.	Qty.	Bolt	Part No.	Qty.	T-Nut
10	3061	3	1/4-20 x 1/2" BHSCS	3382	3	Economy
15	3330	3	5/16-18 x 11/16" FBHSCS	3278	3	Economy
20	11-5308	3	M5 x 8mm BHSCS	14122	3	Economy
25	13-6310	3	M6 x 10mm BHSCS	3859	3	Economy
30	11-6312	3	M6 x 12mm BHSCS	13117	3	Drop-in
40	13-8316	3	M8 x 16mm BHSCS	3838	3	Economy
45	11-8318	3	M8 x 18mm BHSCS	13132	3	Drop-in

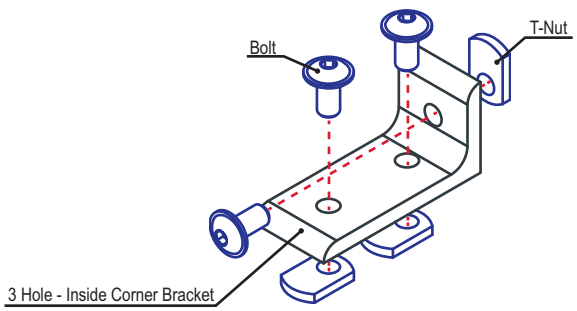

Part Description:

The 3 hole - slotted inside corner bracket is an external fastening method that creates a 90 degree connection. There are two stacked holes on one side and one slotted hole on the opposite side of the bracket. The slotted hole allows for a larger degree of adjustability between connecting profiles. This fastener requires no machining services and can provide infinite positioning along the profile T-slot. The 3 hole - slotted inside corner bracket engages the 2-degree drop-lock feature when the assembly bolts are tightened to the required torque. This bracket can be repositioned and reused.

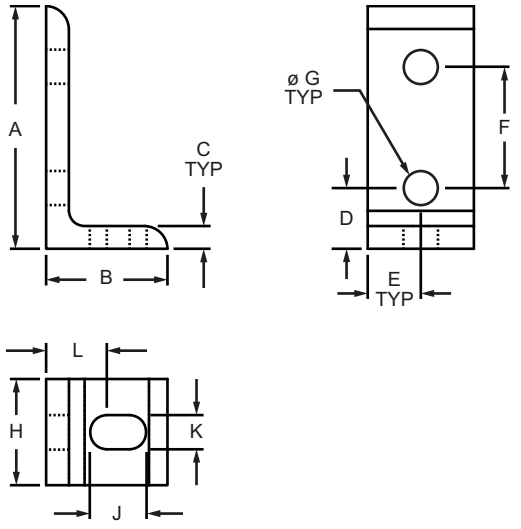

Part No.	Series	Material	Alloy*	Finish	A	B	C	D	E	F	G	H	J	K	L	Weight
4250	10	Aluminum	6105-T5	Clear Anodize	2.000"	1.000"	.188"	.500"	.438"	1.000"	.281"	.875"	.469"	.281"	.500"	.039 lb
4250-Black	10			Black Anodize	2.000"	1.000"	.188"	.500"	.438"	1.000"	.281"	.875"	.469"	.281"	.500"	.039 lb
4280	15			Clear Anodize	3.000"	1.500"	.250"	.750"	.656"	1.500"	.328"	1.312"	.828"	.328"	.500"	.121 lb
4280-Black	15			Black Anodize	3.000"	1.500"	.250"	.750"	.656"	1.500"	.328"	1.312"	.828"	.328"	.500"	.121 lb
25-4250	25			Clear Anodize	50.00mm	25.00mm	4.00mm	12.50mm	11.00mm	25.00mm	6.80mm	22.00mm	10.80mm	6.80mm	12.50mm	.0145 kg
25-4250-Black	25			Black Anodize	50.00mm	25.00mm	4.00mm	12.50mm	11.00mm	25.00mm	6.80mm	22.00mm	10.80mm	6.80mm	12.50mm	.0145 kg
40-4280	40			Clear Anodize	80.00mm	40.00mm	6.00mm	20.00mm	18.00mm	40.00mm	8.30mm	36.00mm	22.30mm	8.30mm	14.00mm	.0599 kg
40-4280-Black	40			Black Anodize	80.00mm	40.00mm	6.00mm	20.00mm	18.00mm	40.00mm	8.30mm	36.00mm	22.30mm	8.30mm	14.00mm	.0599 kg

* Or comparable

Suggested Hardware (Mount to T-Slot)

Part No.	Series	Qty.	Bolt	T-Nut
3393	10	3	1/4-20 x 1/2" BHSCS	Economy
3320	15	3	5/16-18 x 11/16" FBHSCS	Economy
75-3404	25	3	M6 x 10mm BHSCS	Economy
75-3422	40	3	M8 x 16mm BHSCS	Economy

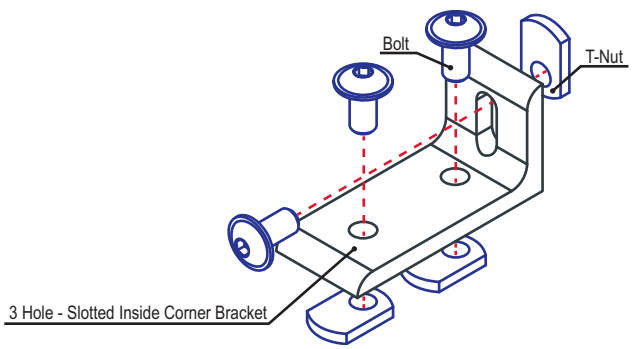

4 Hole - Wide Inside Corner Bracket

Part Description:

The 4 hole - wide inside corner bracket is an external fastening method that creates a 90 degree connection. There are two adjacent holes on each side of the bracket. This fastener requires no machining services and can provide infinite positioning along the profile T-slot, allowing a large degree of adjustability. It is a fastening method that can be repositioned and reused.

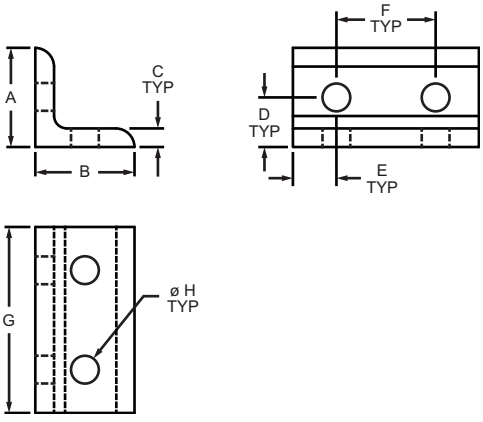

Part No.	Series	Material	Alloy*	Finish	A	B	C	D	E	F	G	H	Weight
4113	10	Aluminum	6105-T5	Clear Anodize	1.000"	1.000"	.188"	.500"	.438"	1.000"	1.875"	.281"	.054 lb
4113-Black	10			Black Anodize	1.000"	1.000"	.188"	.500"	.438"	1.000"	1.875"	.281"	.054 lb
4303	15			Clear Anodize	1.500"	1.500"	.250"	.750"	.656"	1.500"	2.810"	.328"	.175 lb
4303-Black	15			Black Anodize	1.500"	1.500"	.250"	.750"	.656"	1.500"	2.810"	.328"	.175 lb
20-4113	20			Clear Anodize	20.00mm	20.00mm	3.00mm	10.00mm	9.00mm	20.00mm	38.00mm	5.56mm	.0104 kg
20-4113-Black	20			Black Anodize	20.00mm	20.00mm	3.00mm	10.00mm	9.00mm	20.00mm	38.00mm	5.56mm	.0104 kg
25-4113	25			Clear Anodize	25.00mm	25.00mm	4.00mm	12.50mm	11.00mm	25.00mm	47.00mm	6.80mm	.0209 kg
25-4113-Black	25			Black Anodize	25.00mm	25.00mm	4.00mm	12.50mm	11.00mm	25.00mm	47.00mm	6.80mm	.0209 kg
30-4303	30			Clear Anodize	30.00mm	30.00mm	4.00mm	15.00mm	13.50mm	30.00mm	57.00mm	6.81mm	.0324 kg
30-4303-Black	30			Black Anodize	30.00mm	30.00mm	4.00mm	15.00mm	13.50mm	30.00mm	57.00mm	6.81mm	.0324 kg
40-4303	40			Clear Anodize	40.00mm	40.00mm	6.00mm	20.00mm	18.00mm	40.00mm	76.00mm	8.30mm	.0862 kg
40-4303-Black	40			Black Anodize	40.00mm	40.00mm	6.00mm	20.00mm	18.00mm	40.00mm	76.00mm	8.30mm	.0862 kg
45-4303	45			Clear Anodize	45.00mm	45.00mm	6.00mm	22.50mm	21.00mm	45.00mm	87.00mm	8.33mm	.1127 kg
45-4303-Black	45			Black Anodize	45.00mm	45.00mm	6.00mm	22.50mm	21.00mm	45.00mm	87.00mm	8.33mm	.1127 kg

* Or comparable

Suggested Hardware (Mount to T-Slot)

Series	Part No.	Qty.	Bolt	Part No.	Qty.	T-Nut
10	3061	4	1/4-20 x 1/2" BHSCS	3382	4	Economy
15	3330	4	5/16-18 x 11/16" FBHSCS	3278	4	Economy
20	11-5308	4	M5 x 8mm BHSCS	14122	4	Economy
25	13-6310	4	M6 x 10mm BHSCS	3859	4	Economy
30	11-6312	4	M6 x 12mm BHSCS	13117	4	Drop-in
40	13-8316	4	M8 x 16mm BHSCS	3838	4	Economy
45	11-8318	4	M8 x 18mm BHSCS	13132	4	Drop-in

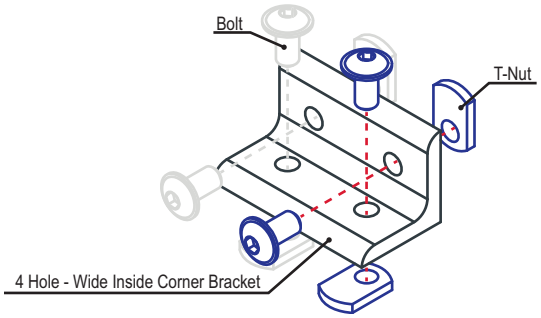

Part Description:

The 4 hole - tall inside corner bracket is an external fastening method that creates a 90 degree connection. Each side of the bracket has two holes stacked one on top of the other. This fastener requires no machining services and can provide infinite positioning along the profile T-slot, allowing a large degree of adjustability. It is a fastening method that can be repositioned and reused.

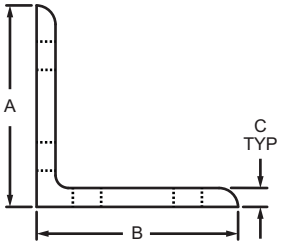

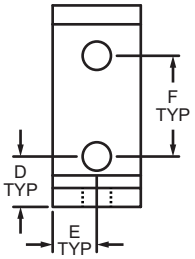

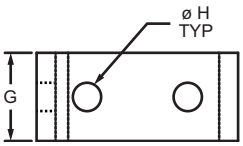

Part No.	Series	Material	Alloy*	Finish	A	B	C	D	E	F	G	H	Weight
4115	10	Aluminum	6105-T5	Clear Anodize	2.000"	2.000"	.188"	.500"	.438"	1.000"	.875"	.281"	.053 lb
4115-Black	10			Black Anodize	2.000"	2.000"	.188"	.500"	.438"	1.000"	.875"	.281"	.053 lb
4301	15			Clear Anodize	3.000"	3.000"	.250"	.750"	.655"	1.500"	1.310"	.328"	.176 lb
4301-Black	15			Black Anodize	3.000"	3.000"	.250"	.750"	.655"	1.500"	1.310"	.328"	.176 lb
25-4115	25			Clear Anodize	50.00mm	50.00mm	4.00mm	12.50mm	11.00mm	25.00mm	22.00mm	6.80mm	.0204 kg
25-4115-Black	25			Black Anodize	50.00mm	50.00mm	4.00mm	12.50mm	11.00mm	25.00mm	22.00mm	6.80mm	.0204 kg
40-4301	40			Clear Anodize	80.00mm	80.00mm	6.00mm	20.00mm	18.00mm	40.00mm	36.00mm	8.30mm	.0853 kg
40-4301-Black	40			Black Anodize	80.00mm	80.00mm	6.00mm	20.00mm	18.00mm	40.00mm	36.00mm	8.30mm	.0853 kg
45-4301	45			Clear Anodize	90.00mm	90.00mm	6.00mm	22.50mm	21.00mm	45.00mm	42.00mm	8.33mm	.1138 kg
45-4301-Black	45			Black Anodize	90.00mm	90.00mm	6.00mm	22.50mm	21.00mm	45.00mm	42.00mm	8.33mm	.1138 kg

* Or comparable

Suggested Hardware (Mount to T-Slot)

Part No.	Series	Qty.	Bolt	T-Nut
3393	10	4	1/4-20 x 1/2" BHSCS	Economy
3320	15	4	5/16-18 x 11/16" FBHSCS	Economy
75-3404	25	4	M6 x 10mm BHSCS	Economy
75-3422	40	4	M8 x 16mm BHSCS	Economy
75-3619	45	4	M8 x 18mm BHSCS	Drop-In

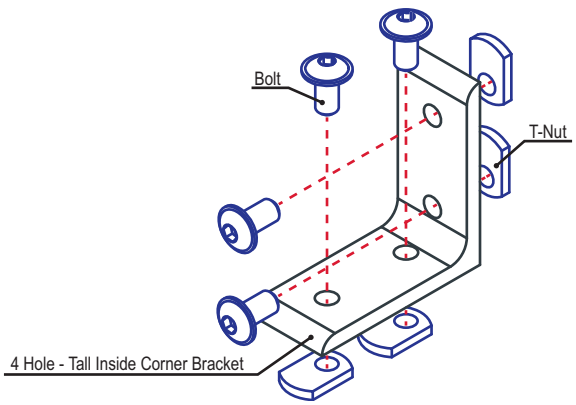

4 Hole - Inside Corner Bracket with Single Support

Part Description:

The 4 hole - inside corner bracket with single support is an external, die-cast fastening method that creates a 90 degree connection. Each side of the bracket has two holes stacked one on top of the other while the single support provides additional strength. The slotted mounting holes allow for greater adjustability between the connecting profiles. Brackets with a slot tab on the support help to line up the profile with the bracket and prevent rotation. It requires no machining services and can provide infinite positioning along the profile T-slot.

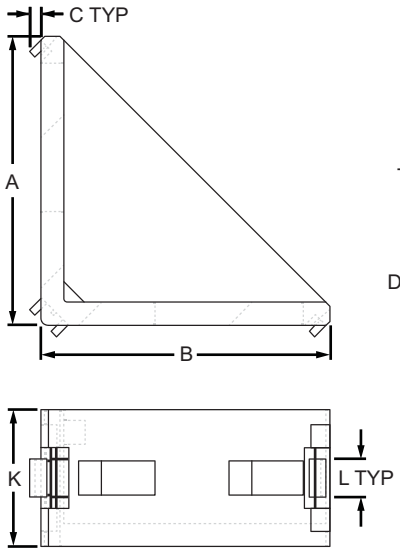

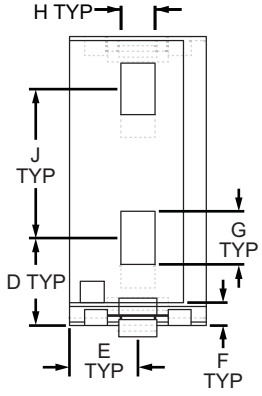

Part No.	Series	Material	Finish	A	B	C	D	E	F	G	H	J	K	L	Weight
14057	20	Aluminum	Natural	38.00mm	38.00mm	1.48mm	11.50mm	9.00mm	3.00mm	7.05mm	4.50mm	19.65mm	18.00mm	5.00mm	.0124 kg
14058	10 25			38.00mm	38.00mm	1.48mm	11.50mm	9.00mm	3.00mm	7.05mm	4.50mm	19.65mm	18.00mm	6.00mm	.0121 kg
14068	30			57.00mm	57.00mm	—	15.62mm	14.00mm	6.00mm	10.80mm	6.20mm	29.90mm	28.00mm	—	.0569 kg
14070	30			57.00mm	57.00mm	1.98mm	15.62mm	14.00mm	6.00mm	10.80mm	6.20mm	29.90mm	28.00mm	8.00mm	.0577 kg
14080	15 40			76.00mm	76.00mm	—	23.50mm	19.00mm	8.50mm	23.00mm	9.00mm	34.50mm	38.00mm	—	.1139 kg
14081	15 40			76.00mm	76.00mm	3.82mm	23.50mm	19.00mm	8.50mm	23.00mm	9.00mm	34.50mm	38.00mm	8.00mm	.1121 kg
14086	45			86.00mm	86.00mm	—	28.00mm	21.50mm	9.50mm	22.90mm	9.00mm	40.00mm	43.00mm	—	.1554 kg
14088	45			86.00mm	86.00mm	3.82mm	28.00mm	21.50mm	9.50mm	22.90mm	9.00mm	40.00mm	43.00mm	10.00mm	.1557 kg

Suggested Hardware (Mount to T-Slot)

Part No.	Series	Qty.	Bolt	T-Nut
3457	10	4	10-32 x 3/8 SHCS	Slide-In
3455	15	4	5/16-18 x 3/4 SHCS	Slide-In
75-3581	20	4	M5 x 8mm BHSCS	Slide-In
75-3401	25	4	M5 x 10mm SHCS	Slide-In
75-3593	30	4	M6 x 14mm SHCS	Drop-In
75-3627	40	4	M8 x 18mm SHCS	Roll-In
75-3630	45	4	M8 x 20mm SHCS	Drop-In

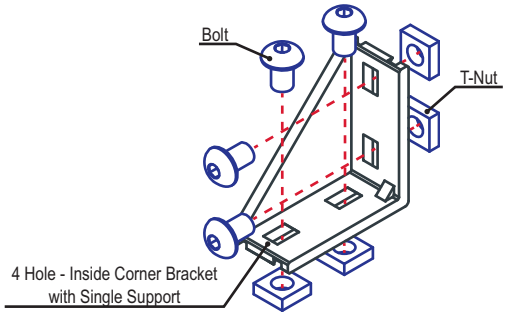

4 Hole - Inside Corner Bracket with Dual Support

Part Description:

The 4 hole - inside corner bracket with dual support is an external, die-cast fastening method that creates a 90 degree connection. The dual supports provide additional strength while the slotted holes allow for greater adjustability. Options with a slot tab help line up the profile with the bracket and prevent rotation. It requires no machining and can provide infinite positioning along the profile T-slot. **Additional Information:** Corner bracket covers are available separately and inhibit debris buildup while providing a finished look.

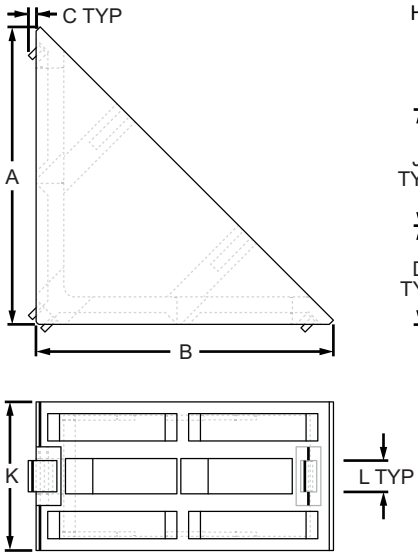

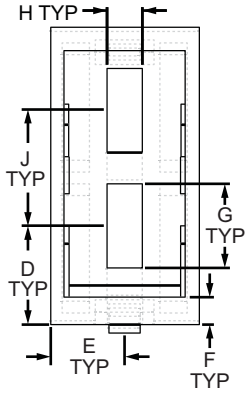

Part No.	Series	Material	Finish	A	B	C	D	E	F	G	H	J	K	L	Weight
14103	15 40 45	Zinc	Natural	76.00mm	76.00mm	—	25.25mm	19.00mm	6.97mm	21.50mm	9.00mm	29.50mm	38.00mm	—	.2622 kg
14098	15 40 45		Powder Coat	76.00mm	76.00mm	—	25.25mm	19.00mm	6.97mm	21.50mm	9.00mm	29.50mm	38.00mm	—	.2705 kg
14100	15 40		Natural	76.00mm	76.00mm	1.98mm	25.25mm	19.00mm	6.97mm	20.70mm	8.20mm	29.50mm	38.00mm	8.00mm	.2618 kg
14099	15 40		Powder Coat	76.00mm	76.00mm	1.98mm	25.25mm	19.00mm	6.97mm	20.70mm	8.20mm	29.50mm	38.00mm	8.00mm	.2068 kg
14102	45		Natural	76.00mm	76.00mm	1.98mm	25.25mm	19.00mm	6.97mm	21.50mm	9.00mm	29.50mm	38.00mm	10.00mm	.2673 kg
14101	45		Powder Coat	76.00mm	76.00mm	1.98mm	25.25mm	19.00mm	6.97mm	21.50mm	9.00mm	29.50mm	38.00mm	10.00mm	.2693 kg

Suggested Hardware (Mount to T-Slot)

Part No.	Series	Qty.	Bolt	T-Nut
3455	15	4	5/16-18 x 3/4 SHCS	Slide-In
75-3627	40	4	M8 x18mm SHCS	Slide-In
75-3630	45	4	M8 x 20mm SHCS	Drop-In

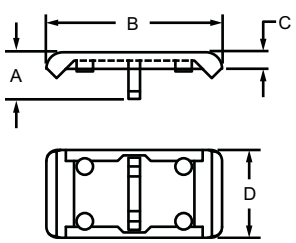

4 Hole - Inside Corner Bracket Cover Cap

Part No.	Series	Material	A	B	C	D	Weight
12038	15 40 45	PA6 GF 30	14.00mm	106.00mm	4.00mm	37.60mm	.0173 kg

4 Hole - Tall Lite Inside Corner Bracket

Part Description:

The 4 hole - tall lite inside corner bracket is an external fastening method that creates a 90 degree connection. Each side of the bracket has two holes stacked one on top of the other. This lightweight fastener requires no machining services and can provide infinite positioning along the profile T-slot, allowing a large degree of adjustability. The 4 hole - tall lite inside corner bracket engages the 2-degree drop-lock feature when the assembly bolts are tightened to the required torque. It is a fastening method that can be repositioned and reused.

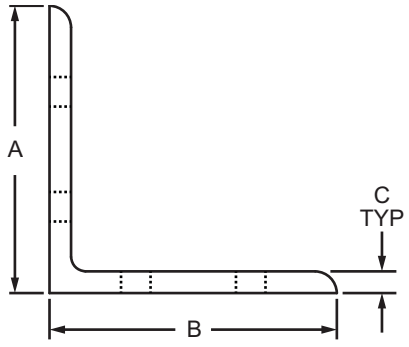

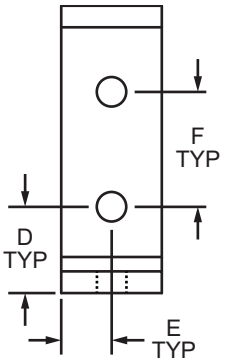

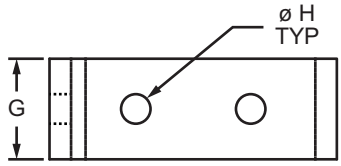

Part No.	Series	Material	Alloy*	Finish	A	B	C	D	E	F	G	H	Weight
4101	10	Aluminum	6105-T5	Clear Anodize	2.500"	2.500"	.188"	.750"	.438"	1.000"	.875"	.257"	.071 lb
4101-Black	10			Black Anodize	2.500"	2.500"	.188"	.750"	.438"	1.000"	.875"	.257"	.071 lb

* Or comparable

Suggested Hardware (Mount to T-Slot)

Part No.	Series	Qty.	Bolt	T-Nut
3393	10	4	1/4-20 x 1/2" BHSCS	Economy

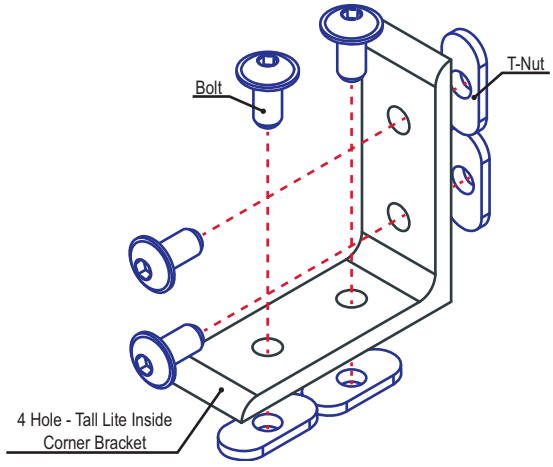

4 Hole - Wide Slotted Inside Corner Bracket

Part Description:

The 4 hole - wide slotted inside corner bracket is an external fastening method that creates a 90 degree connection. There are two adjacent holes on each side of the bracket. Two of the adjacent holes are slotted, allowing for a larger degree of adjustability between connecting profiles. This bracket requires no machining services and can provide infinite positioning along the profile T-slot; it also engages the 2-degree drop-lock feature when the assembly bolts are tightened to the required torque. It is a fastening method that can be repositioned and reused.

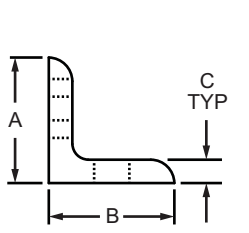

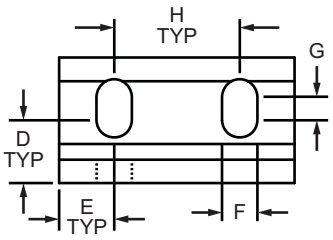

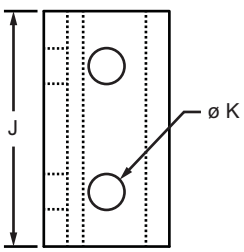

Part No.	Series	Material	Alloy*	Finish	A	B	C	D	E	F	G	H	J	K	Weight
4260	10	Aluminum	6105-T5	Clear Anodize	1.000"	1.000"	.188"	.500"	.438"	.281"	.188"	1.000"	1.875"	.281"	.052 lb
4260-Black	10			Black Anodize	1.000"	1.000"	.188"	.500"	.438"	.281"	.188"	1.000"	1.875"	.281"	.052 lb
4290	15			Clear Anodize	1.500"	1.500"	.250"	.500"	.656"	.328"	.500"	1.500"	2.812"	.328"	.167 lb
4290-Black	15			Black Anodize	1.500"	1.500"	.250"	.500"	.656"	.328"	.500"	1.500"	2.812"	.328"	.167 lb
25-4260	25			Clear Anodize	25.00mm	25.00mm	4.00mm	12.50mm	11.00mm	6.80mm	4.00mm	25.00mm	47.00mm	6.80mm	.0200 kg
25-4260-Black	25			Black Anodize	25.00mm	25.00mm	4.00mm	12.50mm	11.00mm	6.80mm	4.00mm	25.00mm	47.00mm	6.80mm	.0200 kg
40-4290	40			Clear Anodize	40.00mm	40.00mm	6.00mm	14.00mm	18.00mm	8.30mm	14.00mm	40.00mm	76.00mm	8.30mm	.0826 kg
40-4290-Black	40			Black Anodize	40.00mm	40.00mm	6.00mm	14.00mm	18.00mm	8.30mm	14.00mm	40.00mm	76.00mm	8.30mm	.0826 kg

* Or comparable

Suggested Hardware (Mount to T-Slot)

Part No.	Series	Qty.	Bolt	T-Nut
3393	10	4	1/4-20 x 1/2" BHSCS	Economy
3320	15	4	5/16-18 x 11/16" FBHSCS	Economy
75-3404	25	4	M6 x 10mm BHSCS	Economy
75-3422	40	4	M8 x 16mm BHSCS	Economy

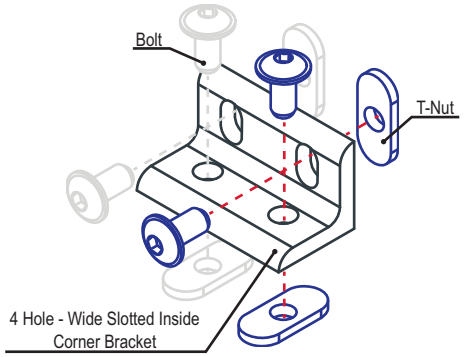

6 Hole - Tall Inside Corner Bracket

Part Description:

The 6 hole - tall inside corner bracket is an external fastening method that creates a 90 degree connection. Each side of the bracket has three holes stacked one on top of the other. This fastener requires no machining services and can provide infinite positioning along the profile T-slot, allowing a large degree of adjustability. The 6 hole - tall inside corner bracket engages the 2-degree drop-lock feature when the assembly bolts are tightened to the required torque. It is a fastening method that can be repositioned and reused.

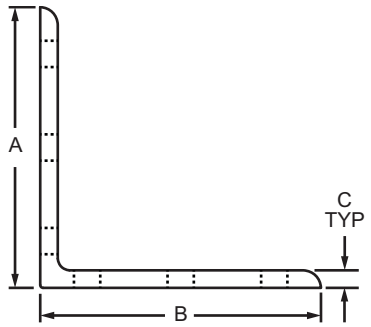

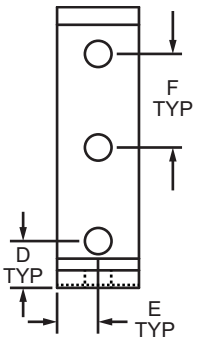

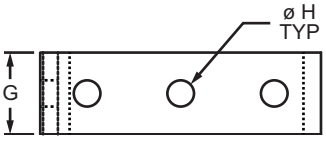

Part No.	Series	Material	Alloy*	Finish	A	B	C	D	E	F	G	H	Weight
4013	10	Aluminum	6105-T5	Clear Anodize	3.000"	3.000"	.188"	.500"	.438"	1.000"	.875"	.281"	.083 lb
4013-Black	10			Black Anodize	3.000"	3.000"	.188"	.500"	.438"	1.000"	.875"	.281"	.083 lb
4413	15			Clear Anodize	4.500"	4.500"	.250"	.750"	.656"	1.500"	1.312"	.328"	.260 lb
4413-Black	15			Black Anodize	4.500"	4.500"	.250"	.750"	.656"	1.500"	1.312"	.328"	.260 lb

* Or comparable

Suggested Hardware (Mount to T-Slot)

Part No.	Series	Qty.	Bolt	T-Nut
3393	10	6	1/4-20 x 1/2" BHSCS	Economy
3320	15	6	5/16-18 x 11/16 FBHSCS	Economy

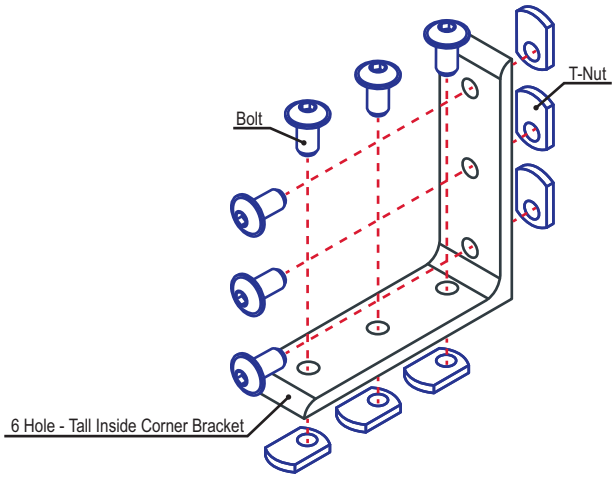

Part Description:

The 6 hole - wide 2x4 inside corner bracket is an external fastening method that creates a 90 degree connection. One side of the bracket has two adjacent holes and the second side has four holes comprised of two rows and two columns. This fastener requires no machining services and can provide infinite positioning along the profile T-slot, allowing a large degree of adjustability. It engages the 2-degree drop-lock feature when the assembly bolts are tightened to the required torque and can also be repositioned and reused.

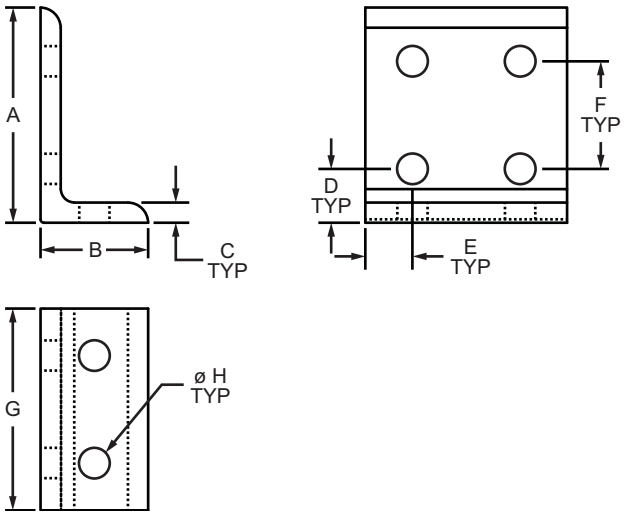

Part No.	Series	Material	Alloy*	Finish	A	B	C	D	E	F	G	H	Weight
4175	10	Aluminum	6105-T5	Clear Anodize	2.000"	1.000"	.188"	.500"	.437"	1.000"	1.875"	.281"	.085 lb
4175-Black	10			Black Anodize	2.000"	1.000"	.188"	.500"	.437"	1.000"	1.875"	.281"	.085 lb
4375	15			Clear Anodize	3.000"	1.500"	.250"	.750"	.654"	1.500"	2.810"	.328"	.277 lb
4375-Black	15			Black Anodize	3.000"	1.500"	.250"	.750"	.654"	1.500"	2.810"	.328"	.277 lb
25-4175	25			Clear Anodize	50.00mm	25.00mm	4.00mm	12.50mm	11.00mm	25.00mm	47.00mm	6.80mm	.0322 kg
25-4175-Black	25			Black Anodize	50.00mm	25.00mm	4.00mm	12.50mm	11.00mm	25.00mm	47.00mm	6.80mm	.0322 kg
40-4375	40			Clear Anodize	80.00mm	40.00mm	6.00mm	20.00mm	18.00mm	40.00mm	76.00mm	8.30mm	.1320 kg
40-4375-Black	40			Black Anodize	80.00mm	40.00mm	6.00mm	20.00mm	18.00mm	40.00mm	76.00mm	8.30mm	.1320 kg

* Or comparable

Suggested Hardware (Mount to T-Slot)

Part No.	Series	Qty.	Bolt	T-Nut
3393	10	6	1/4-20 x 1/2" BHSCS	Economy
3320	15	6	5/16-18 x 11/16 FBHSCS	Economy
75-3404	25	6	M6 x 10mm BHSCS	Economy
75-3422	40	6	M8 x 16mm BHSCS	Economy

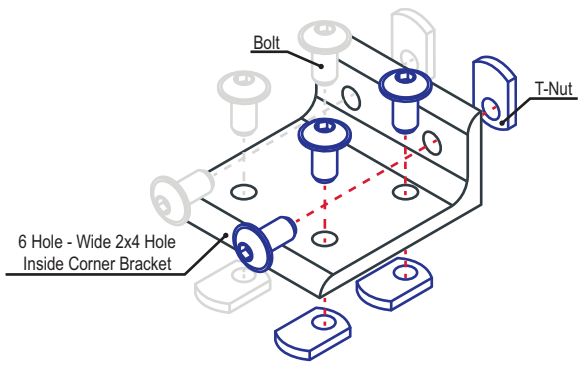

6 Hole - Wide 2x4 Slotted Inside Corner Bracket

Part Description:

The 6 hole - wide 2x4 slotted inside corner bracket is an external fastening method that creates a 90 degree connection. One side of the bracket has two adjacent holes and the second side has four holes comprised of two rows and two columns. The two adjacent holes are slotted, allowing for a larger degree in adjustability between connecting profiles. This fastener requires no machining services and can provide infinite positioning along the profile T-slot, allowing a large degree of adjustability. It engages the 2-degree drop-lock feature when the assembly bolts are tightened to the required torque and can also be repositioned and reused.

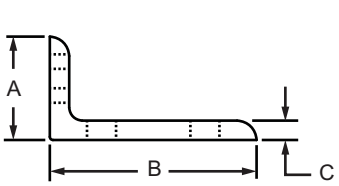

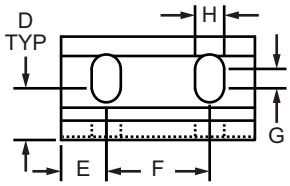

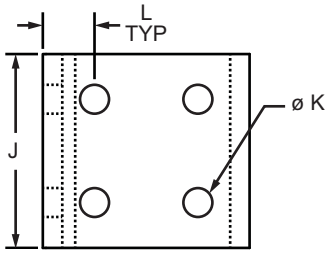

Part No.	Series	Material	Alloy*	Finish	A	B	C	D	E	F	G	H	J	K	L	Weight
4286	10	Aluminum	6105-T5	Clear Anodize	1.000"	2.000"	.188"	.500"	.438"	1.000"	.188"	.281"	1.875"	.281"	.500"	.084 lb
4286-Black	10			Black Anodize	1.000"	2.000"	.188"	.500"	.438"	1.000"	.188"	.281"	1.875"	.281"	.500"	.084 lb
4285	15			Clear Anodize	1.500"	3.000"	.250"	.500"	.656"	1.500"	.500"	.328"	2.810"	.328"	.750"	.262 lb
4285-Black	15			Black Anodize	1.500"	3.000"	.250"	.500"	.656"	1.500"	.500"	.328"	2.810"	.328"	.750"	.262 lb
25-4286	25			Clear Anodize	25.00mm	50.00mm	4.00mm	12.50mm	11.00mm	25.00mm	4.00mm	6.80mm	47.00mm	6.80mm	12.50mm	.0318 kg
25-4286-Black	25			Black Anodize	25.00mm	50.00mm	4.00mm	12.50mm	11.00mm	25.00mm	4.00mm	6.80mm	47.00mm	6.80mm	12.50mm	.0318 kg
40-4285	40			Clear Anodize	40.00mm	80.00mm	6.00mm	14.00mm	18.00mm	40.00mm	14.00mm	8.30mm	76.00mm	8.30mm	20.00mm	.1279 kg
40-4285-Black	40			Black Anodize	40.00mm	80.00mm	6.00mm	14.00mm	18.00mm	40.00mm	14.00mm	8.30mm	76.00mm	8.30mm	20.00mm	.1279 kg

* Or comparable

Suggested Hardware (Mount to T-Slot)

Part No.	Series	Qty.	Bolt	T-Nut
3393	10	6	1/4-20 x 1/2" BHSCS	Economy
3320	15	6	5/16-18 x 11/16 FBHSCS	Economy
75-3404	25	6	M6 x 10mm BHSCS	Economy
75-3422	40	6	M8 x 16mm BHSCS	Economy

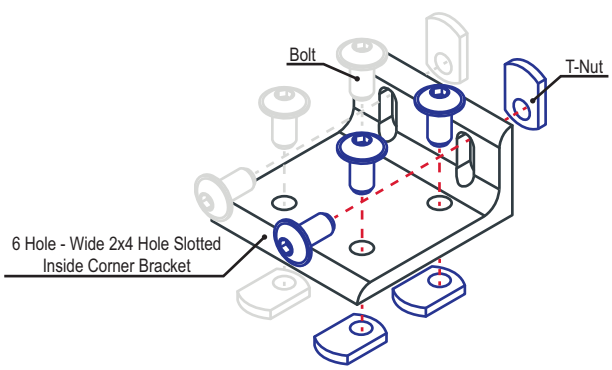

Part Description:

The 6 hole - wide 3x3 inside corner bracket is an external fastening method that creates a 90 degree connection. There are three adjacent holes on each side of the bracket. It requires no machining services and can provide infinite positioning along the profile T-slot, allowing a large degree of adjustability. The bracket engages the 2-degree drop-lock feature when the assembly bolts are tightened to the required torque. It is a fastening method that can be repositioned and reused.

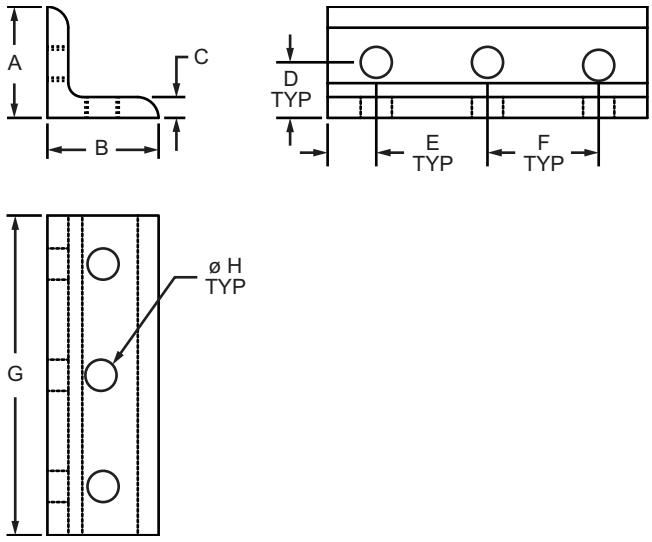

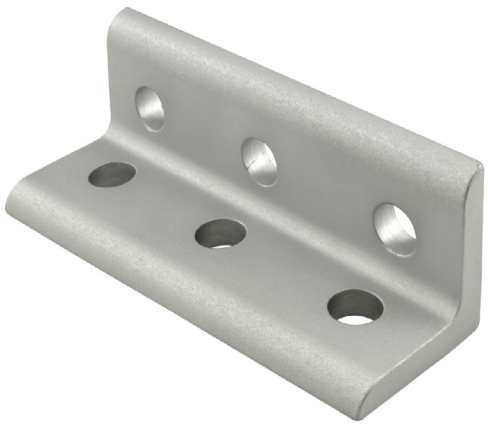

Part No.	Series	Material	Alloy*	Finish	A	B	C	D	E	F	G	H	Weight
4015	10	Aluminum	6105-T5	Clear Anodize	1.000"	1.000"	.188"	.500"	.437"	1.000"	2.875"	.281"	.083 lb
4015-Black	10			Black Anodize	1.000"	1.000"	.188"	.500"	.437"	1.000"	2.875"	.281"	.083 lb
4415	15			Clear Anodize	1.500"	1.500"	.250"	.750"	.656"	1.500"	4.310"	.328"	.268 lb
4415-Black	15			Black Anodize	1.500"	1.500"	.250"	.750"	.656"	1.500"	4.310"	.328"	.268 lb

* Or comparable

Suggested Hardware (Mount to T-Slot)

Part No.	Series	Qty.	Bolt	T-Nut
3393	10	6	1/4-20 x 1/2" BHSCS	Economy
3320	15	6	5/16-18 x 11/16 FBHSCS	Economy

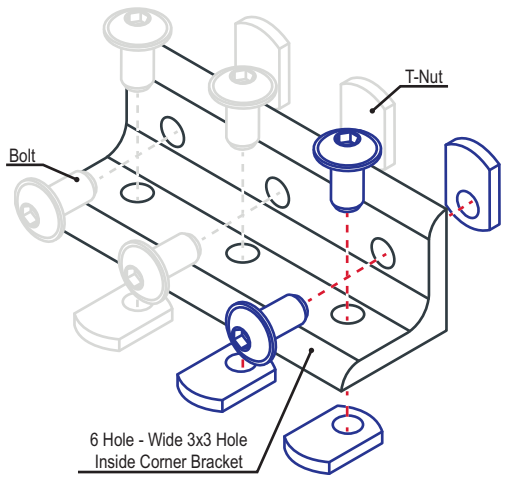

6 Hole - Center Inside Corner Bracket

Part Description:

The 6 hole - center inside corner bracket is an external fastening method that creates a 90 degree connection. One side of the bracket has four holes comprised of two rows and two columns while the second side has two centered, stacked holes. This bracket can be used to connect profiles that are within the same series but of different sizes. It requires no machining services and can provide infinite positioning along the profile T-slot, allowing a large degree of adjustability. The 6 hole - center inside corner bracket engages the 2-degree drop-lock feature when the assembly bolts are tightened to the required torque. It is a fastening method that can be repositioned and reused.

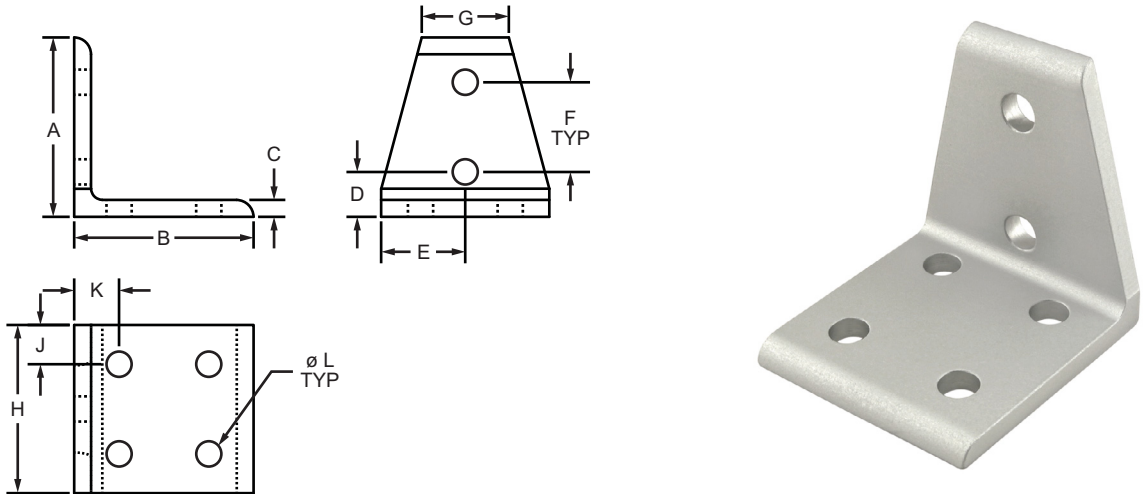

Part No.	Series	Material	Alloy*	Finish	A	B	C	D	E	F	G	H	J	K	L	Weight
4111	10	Aluminum	6105-T5	Clear Anodize	2.000"	2.000"	.188"	.500"	.937"	1.000"	.970"	1.875"	.438"	.500"	.281"	.106 lb
4111-Black	10			Black Anodize	2.000"	2.000"	.188"	.500"	.937"	1.000"	.970"	1.875"	.438"	.500"	.281"	.106 lb
4311	15			Clear Anodize	3.000"	3.000"	.250"	.750"	1.405"	1.500"	1.310"	2.810"	.654"	.750"	.328"	.338 lb
4311-Black	15			Black Anodize	3.000"	3.000"	.250"	.750"	1.405"	1.500"	1.310"	2.810"	.654"	.750"	.328"	.338 lb
25-4111	25			Clear Anodize	50.00mm	50.00mm	4.00mm	12.50mm	23.50mm	25.00mm	25.00mm	47.00mm	11.00mm	12.50mm	6.80mm	.0399 kg
25-4111-Black	25			Black Anodize	50.00mm	50.00mm	4.00mm	12.50mm	23.50mm	25.00mm	25.00mm	47.00mm	11.00mm	12.50mm	6.80mm	.0399 kg
40-4311	40			Clear Anodize	80.00mm	80.00mm	6.00mm	20.00mm	38.00mm	40.00mm	36.00mm	76.00mm	18.00mm	20.00mm	8.30mm	.1606 kg
40-4311-Black	40			Black Anodize	80.00mm	80.00mm	6.00mm	20.00mm	38.00mm	40.00mm	36.00mm	76.00mm	18.00mm	20.00mm	8.30mm	.1606 kg

* Or comparable

Suggested Hardware (Mount to T-Slot)

Part No.	Series	Qty.	Bolt	T-Nut
3393	10	6	1/4-20 x 1/2" BHSCS	Economy
3320	15	6	5/16-18 x 11/16 FBHSCS	Economy
75-3404	25	6	M6 x 10mm BHSCS	Economy
75-3422	40	6	M8 x 16mm BHSCS	Economy

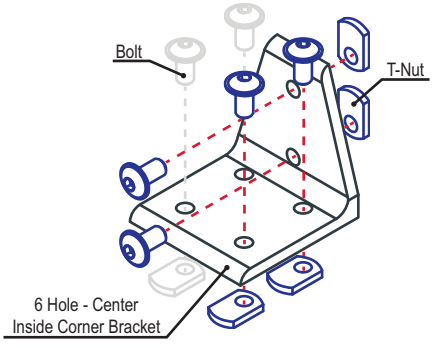

Part Description:

The 6 hole - left aligned inside corner bracket is an external fastening method that creates a 90 degree connection. One side of the bracket has four holes comprised of two rows and two columns while the second side has two left-aligned, stacked holes. This bracket can be used to connect profiles that are within the same series but of different sizes. It requires no machining services and can provide infinite positioning along the profile T-slot, allowing a large degree of adjustability. The 6 hole - left aligned inside corner bracket engages the 2-degree drop-lock feature when the assembly bolts are tightened to the required torque. It is a fastening method that can be repositioned and reused.

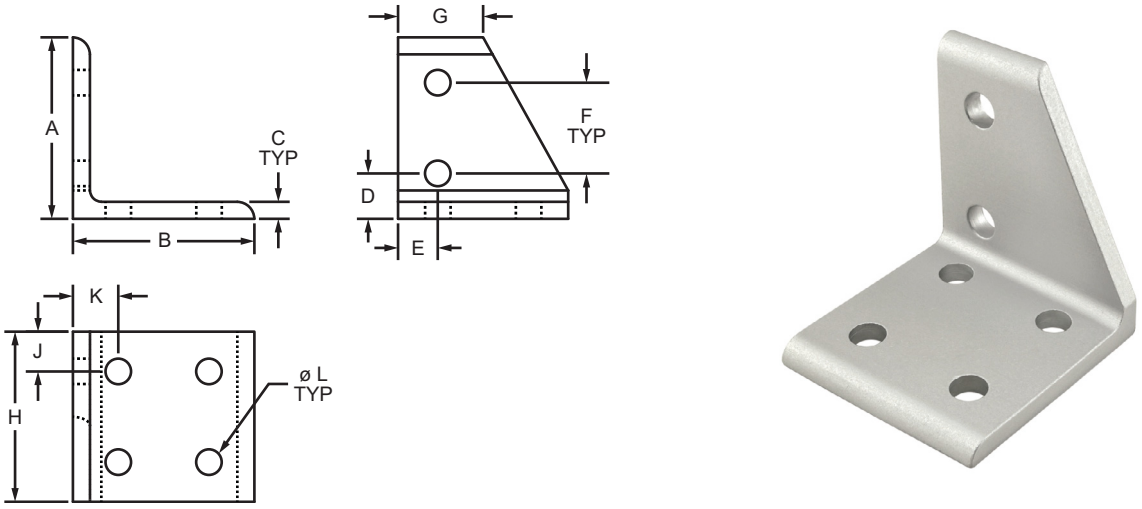

Part No.	Series	Material	Alloy*	Finish	A	B	C	D	E	F	G	H	J	K	L	Weight
4122	10	Aluminum	6105-T5	Clear Anodize	2.000"	2.000"	.188"	.500"	.437"	1.000"	.937"	1.875"	.437"	.500"	.281"	.105 lb
4122-Black	10			Black Anodize	2.000"	2.000"	.188"	.500"	.437"	1.000"	.937"	1.875"	.437"	.500"	.281"	.105 lb
4309	15			Clear Anodize	3.000"	3.000"	.250"	.750"	.656"	1.500"	1.310"	2.810"	.656"	.750"	.328"	.324 lb
4309-Black	15			Black Anodize	3.000"	3.000"	.250"	.750"	.656"	1.500"	1.310"	2.810"	.656"	.750"	.328"	.324 lb
40-4309	40			Clear Anodize	80.00mm	80.00mm	6.00mm	20.00mm	18.00mm	40.00mm	36.00mm	76.00mm	18.00mm	20.00mm	8.30mm	.1601 kg
40-4309-Black	40			Black Anodize	80.00mm	80.00mm	6.00mm	20.00mm	18.00mm	40.00mm	36.00mm	76.00mm	18.00mm	20.00mm	8.30mm	.1601 kg

* Or comparable

Suggested Hardware (Mount to T-Slot)

Part No.	Series	Qty.	Bolt	T-Nut
3393	10	6	1/4-20 x 1/2" BHSCS	Economy
3320	15	6	5/16-18 x 11/16 FBHSCS	Economy
75-3422	40	6	M8 x 16mm BHSCS	Economy

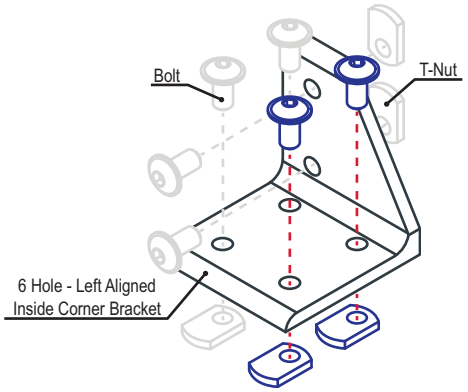

6 Hole - Right Aligned Inside Corner Bracket

Part Description:

The 6 hole - right aligned inside corner bracket is an external fastening method that creates a 90 degree connection. One side of the bracket has four holes comprised of two rows and two columns while the second side has two right-aligned, stacked holes. This bracket can be used to connect profiles that are within the same series but of different sizes. It requires no machining services and can provide infinite positioning along the profile T-slot, allowing a large degree of adjustability. The 6 hole - right aligned inside corner bracket engages the 2-degree drop-lock feature when the assembly bolts are tightened to the required torque. It is a fastening method that can be repositioned and reused.

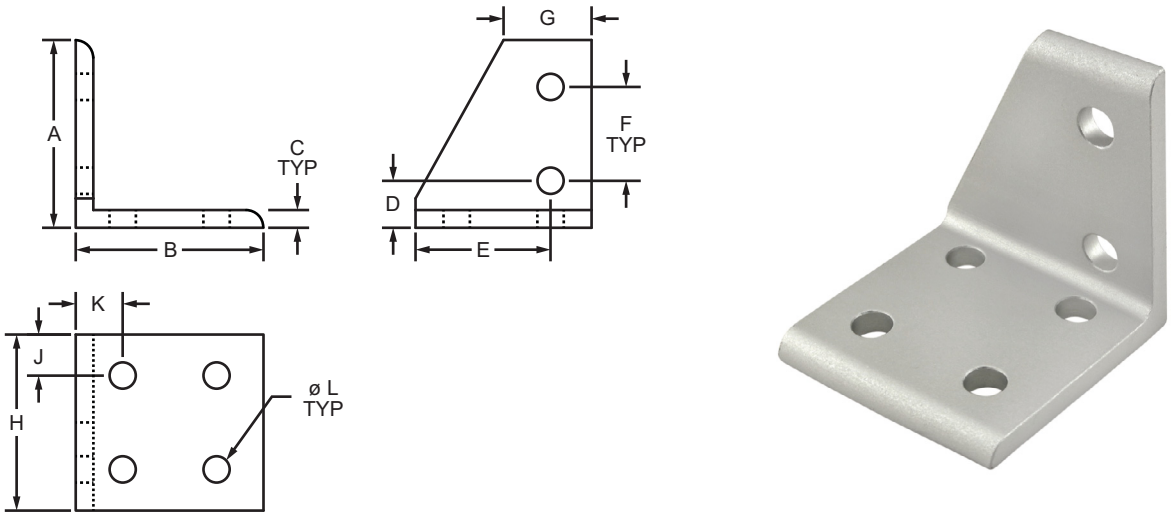

Part No.	Series	Material	Alloy*	Finish	A	B	C	D	E	F	G	H	J	K	L	Weight
4121	10	Aluminum	6105-T5	Clear Anodize	2.000"	2.000"	.188"	.500"	1.437"	1.000"	.938"	1.875"	.437"	.500"	.281"	.106 lb
4121-Black	10			Black Anodize	2.000"	2.000"	.188"	.500"	1.437"	1.000"	.938"	1.875"	.437"	.500"	.281"	.106 lb
4308	15			Clear Anodize	3.000"	3.000"	.250"	.750"	2.156"	1.500"	1.310"	2.810"	.656"	.750"	.328"	.326 lb
4308-Black	15			Black Anodize	3.000"	3.000"	.250"	.750"	2.156"	1.500"	1.310"	2.810"	.656"	.750"	.328"	.326 lb
40-4308	40			Clear Anodize	80.00mm	80.00mm	6.00mm	20.00mm	58.00mm	40.00mm	36.00mm	76.00mm	18.00mm	20.00mm	8.30mm	.1597 kg
40-4308-Black	40			Black Anodize	80.00mm	80.00mm	6.00mm	20.00mm	58.00mm	40.00mm	36.00mm	76.00mm	18.00mm	20.00mm	8.30mm	.1597 kg

* Or comparable

Suggested Hardware (Mount to T-Slot)

Part No.	Series	Qty.	Bolt	T-Nut
3393	10	6	1/4-20 x 1/2" BHSCS	Economy
3320	15	6	5/16-18 x 11/16 FBHSCS	Economy
75-3422	40	6	M8 x 16mm BHSCS	Economy

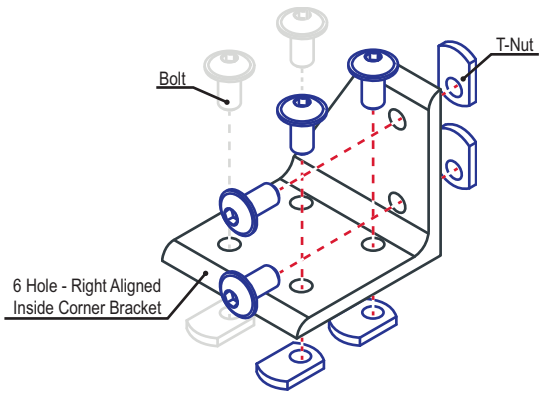

6 Hole - Wide Slotted Inside Corner Bracket

Part Description:

The 6 hole - wide slotted inside corner bracket is an external fastening method that creates a 90 degree connection. There are three adjacent holes on each side of the bracket. Three of the holes on one side are slotted, allowing for a larger degree in adjustability between connecting profiles. This bracket can provide infinite positioning along the profile T-slot, allowing a large degree of adjustability. It engages the 2-degree drop-lock feature when the assembly bolts are tightened to the required torque. It is a fastening method that can be repositioned and reused.

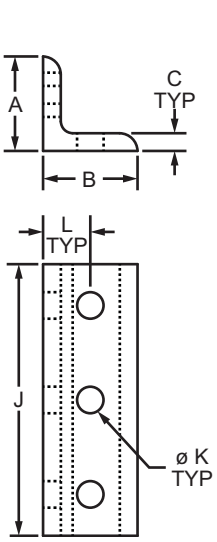

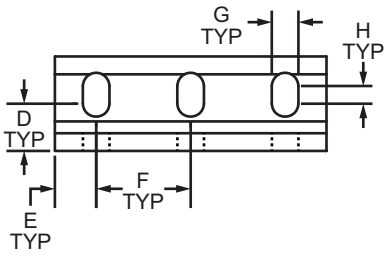

Part No.	Series	Material	Alloy*	Finish	A	B	C	D	E	F	G	H	J	K	L	Weight
4266	10	Aluminum	6105-T5	Clear Anodize	1.000"	1.000"	.188"	.500"	.438"	1.000"	.281"	.188"	2.875"	.281"	.500"	.081 lb
4266-Black	10			Black Anodize	1.000"	1.000"	.188"	.500"	.438"	1.000"	.281"	.188"	2.875"	.281"	.500"	.081 lb
4296	15			Clear Anodize	1.500"	1.500"	.250"	.500"	.656"	1.500"	.328"	.500"	4.312"	.328"	.750"	.257 lb
4296-Black	15			Black Anodize	1.500"	1.500"	.250"	.500"	.656"	1.500"	.328"	.500"	4.312"	.328"	.750"	.257 lb

* Or comparable

Suggested Hardware (Mount to T-Slot)

Part No.	Series	Qty.	Bolt	T-Nut
3393	10	6	1/4-20 x 1/2" BHSCS	Economy
3320	15	6	5/16-18 x 11/16 FBHSCS	Economy

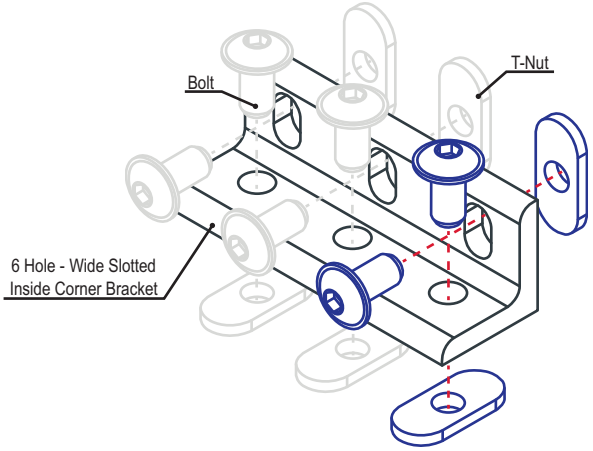

8 Hole - Inside Corner Bracket

Part Description:

The 8 hole - inside corner bracket is an external fastening method that creates a 90 degree connection and has four holes on each side of the bracket, comprised of two rows and two columns. It requires no machining services and can provide infinite positioning along the profile T-slot, allowing a large degree of adjustability. It is a fastening method that can be repositioned and reused.

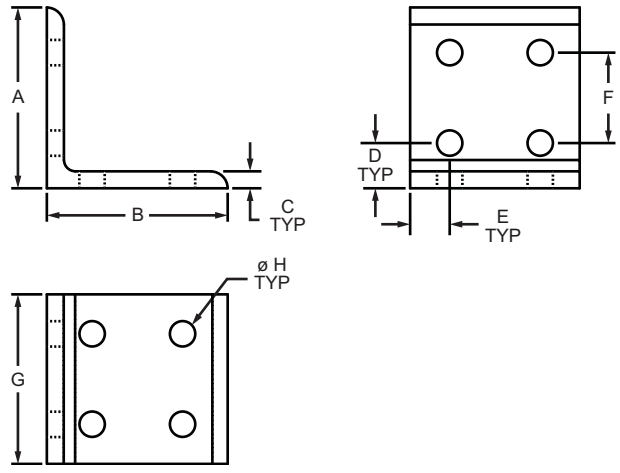

Part No.	Series	Material	Alloy*	Finish	A	B	C	D	E	F	G	H	Weight
4114	10	Aluminum	6105-T5	Clear Anodize	2.000"	2.000"	.188"	.500"	.438"	1.000"	1.875"	.281"	.115 lb
4114-Black	10			Black Anodize	2.000"	2.000"	.188"	.500"	.438"	1.000"	1.875"	.281"	.115 lb
4304	15			Clear Anodize	3.000"	3.000"	.250"	.750"	.656"	1.500"	2.810"	.328"	.365 lb
4304-Black	15			Black Anodize	3.000"	3.000"	.250"	.750"	.656"	1.500"	2.810"	.328"	.365 lb
25-4114	25			Clear Anodize	50.00mm	50.00mm	4.00mm	12.50mm	11.00mm	25.00mm	47.00mm	6.80mm	.0440 kg
25-4114-Black	25			Black Anodize	50.00mm	50.00mm	4.00mm	12.50mm	11.00mm	25.00mm	47.00mm	6.80mm	.0440 kg
40-4304	40			Clear Anodize	80.00mm	80.00mm	6.00mm	20.00mm	18.00mm	40.00mm	76.00mm	8.30mm	.1787 kg
40-4304-Black	40			Black Anodize	80.00mm	80.00mm	6.00mm	20.00mm	18.00mm	40.00mm	76.00mm	8.30mm	.1787 kg
45-4304	45			Clear Anodize	90.00mm	90.00mm	6.00mm	22.50mm	21.00mm	45.00mm	87.00mm	8.33mm	.2360 kg
45-4304-Black	45			Black Anodize	90.00mm	90.00mm	6.00mm	22.50mm	21.00mm	45.00mm	87.00mm	8.33mm	.2360 kg

* Or comparable

Suggested Hardware (Mount to T-Slot)

Part No.	Series	Qty.	Bolt	T-Nut
3393	10	8	1/4-20 x 1/2" BHSCS	Economy
3320	15	8	5/16-18 x 11/16 FBHSCS	Economy
75-3404	25	8	M6 x 10mm BHSCS	Economy
75-3422	40	8	M8 x 16mm BHSCS	Economy
75-3619	45	8	M8 x 18mm BHSCS	Drop-In

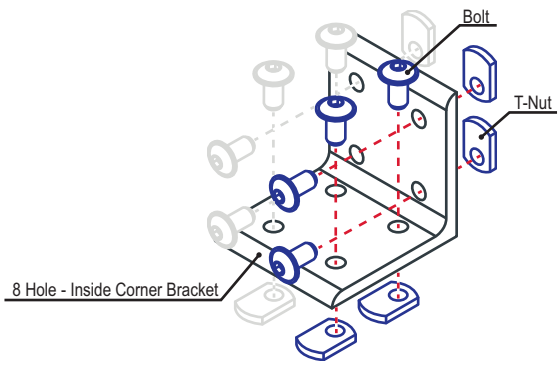

8 Hole - 57mm Inside Corner Bracket with Dual Support

Part Description:

The 8 hole - 57mm inside corner bracket with dual support is an external, die-cast fastening method that creates a 90 degree connection. The dual support provides additional strength while the slotted holes allow for greater adjustability. Options with a slot tab help line up the profile with the bracket and prevent rotation. It requires no machining and can provide infinite positioning along the profile T-slot. **Additional Information:** Corner bracket covers are available separately and inhibit debris buildup while providing a finished look.

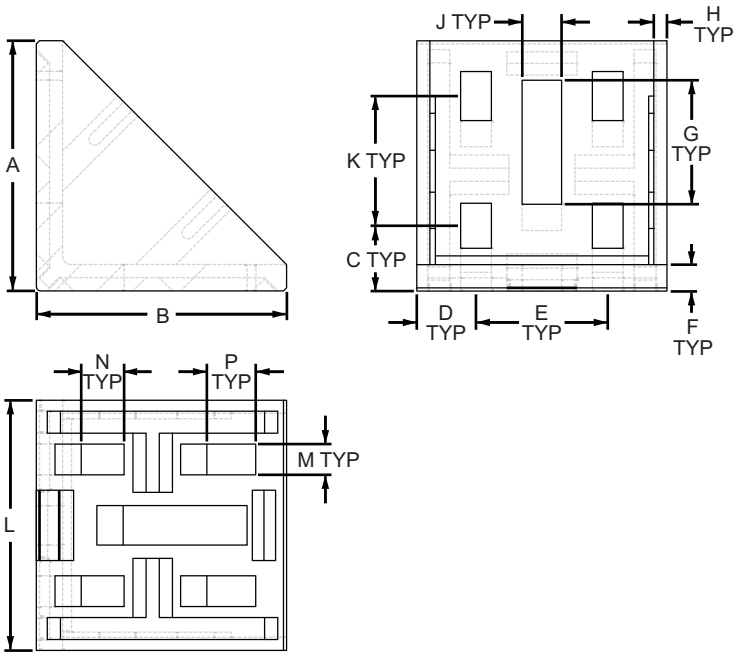

Part No.	Series	Material	Finish	A	B	C	D	E	F	G	H	J	K	L	M	N	P	Weight
14089	30	Zinc	Powder Coat	57.00mm	57.00mm	15.12mm	13.50mm	30.00mm	6.00mm	38.20mm	3.00mm	9.00mm	29.32mm	57.00mm	7.00mm	9.75mm	11.12mm	.2271 kg
14095	30	Aluminum	Natural	57.00mm	57.00mm	15.12mm	13.50mm	30.00mm	6.00mm	38.20mm	3.00mm	9.00mm	29.32mm	58.00mm	7.00mm	9.75mm	11.12mm	.1029 kg

Suggested Hardware (Mount to T-Slot)

Part No.	Series	Qty.	Bolt	T-Nut
75-3593	30	8	M6 x 14mm SHCS	Drop-In

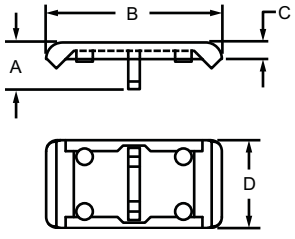

8 Hole - 57mm Inside Corner Bracket Cover Cap

Part No.	Bracket No.	Series	Material	A	B	C	D	Weight
12036	14089	30	PA6 GF 30	14.00mm	87.30mm	4.00mm	56.60mm	.0245 kg
12037	14095	30	PA6 GF 30	17.00mm	87.00mm	7.00mm	56.70mm	.0273 kg

8 Hole - 76mm Inside Corner Bracket with Dual Support

Part Description:

The 8 hole - 76mm inside corner bracket with dual support is an external, die-cast fastening method that creates a 90 degree connection. The dual support provides additional strength while the slotted holes allow for greater adjustability. Options with a slot tab help line up the profile with the bracket and prevent rotation. It requires no machining and can provide infinite positioning along the profile T-slot. **Additional Information:** Corner bracket covers are available separately and inhibit debris buildup while providing a finished look.

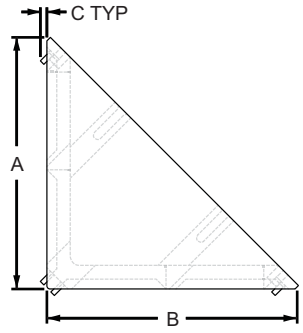

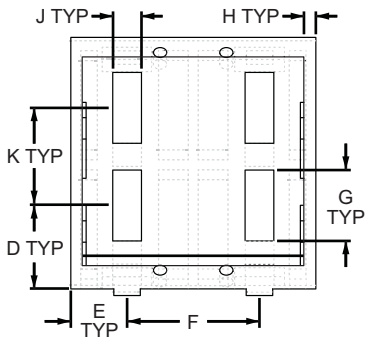

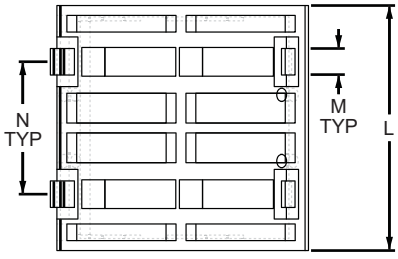

Part No.	Series	Material	Finish	A	B	C	D	E	F	G	H	J	K	L	M	N	Weight
14104	40	Zinc	Powder Coat	76.00mm	76.00mm	—	25.25mm	17.00mm	40.00mm	21.50mm	3.50mm	8.70mm	29.50mm	74.00mm	—	40.00mm	.4005 kg
14105	40			76.00mm	76.00mm	2.00mm	25.25mm	17.00mm	40.00mm	21.50mm	3.50mm	8.70mm	29.50mm	74.00mm	8.00mm	40.00mm	.4051 kg

Suggested Hardware (Mount to T-Slot)

Part No.	Series	Qty.	Bolt	T-Nut
75-3627	40	8	M8 x 18mm SHCS	Slide-In

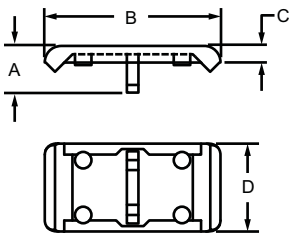

8 Hole - 76mm Inside Corner Bracket Cover Cap

Part No.	Series	Material	A	B	C	D	Weight
12039	40	PA6 GF 30	14.00mm	106.20mm	4.00mm	73.50mm	.0423 kg

8 Hole - 86mm Inside Corner Bracket with Dual Support

Part Description:

The 8 hole - 86mm inside corner bracket with dual support is an external, die-cast fastening method that creates a 90 degree connection. The dual support provides additional strength while the slotted holes allow for greater adjustability. Options with a slot tab help line up the profile with the bracket and prevent rotation. It requires no machining and can provide infinite positioning along the profile T-slot. **Additional Information:** Corner bracket covers are available separately and inhibit debris buildup while providing a finished look.

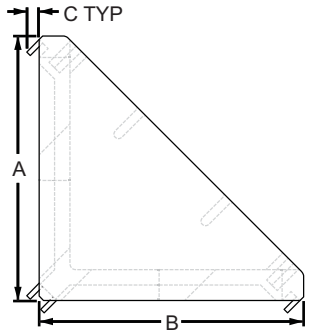

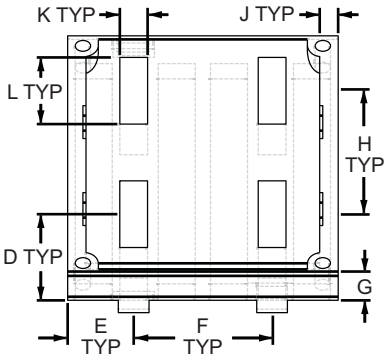

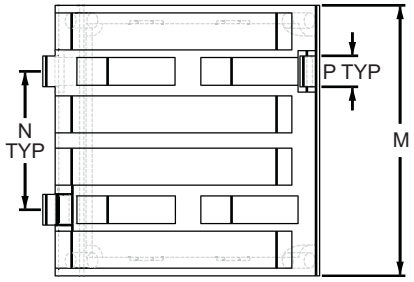

Part No.	Series	Material	Finish	A	B	C	D	E	F	G	H	J	K	L	M	N	P	Weight
14111	45	Aluminum	Natural	86.00mm	86.00mm	4.03mm	28.00mm	21.50mm	45.00mm	10.00mm	40.15mm	6.00mm	9.00mm	21.62mm	88.00mm	45.00mm	10.00mm	.3343 kg

Suggested Hardware (Mount to T-Slot)

Part No.	Series	Qty.	Bolt	T-Nut
75-3630	45	8	M8 x 20mm SHCS	Drop-In

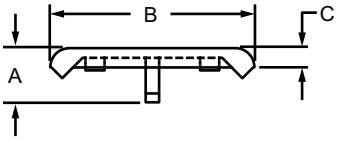

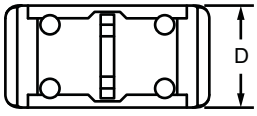

8 Hole - 86mm Inside Corner Bracket Cover Cap

Part No.	Series	Material	A	B	C	D	Weight
12040	45	PA6 GF 30	20.00mm	131.80mm	3.00mm	87.60mm	.0618 kg

9 Hole - Wide Slotted Inside Corner Bracket

Part Description:

The 9 hole - wide slotted inside corner bracket is an external fastening method that creates a 90 degree connection. One side of the bracket has three adjacent holes and the second side has six holes comprised of two rows and three columns. The three adjacent holes are slotted, allowing for a larger degree in adjustability between connecting profiles. This bracket requires no machining services and can provide infinite positioning along the profile T-slot. It engages the 2-degree drop-lock feature when the assembly bolts are tightened to the required torque.

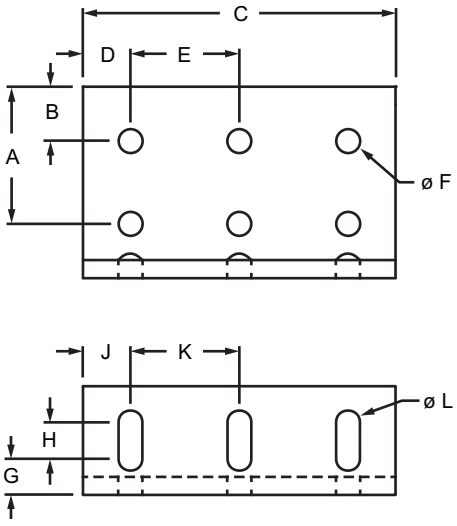

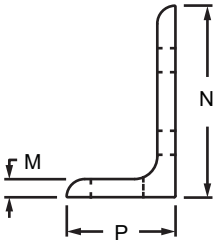

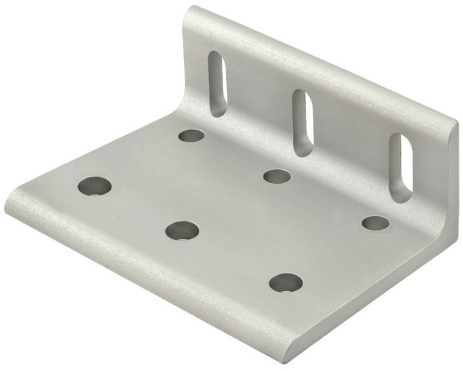

Part No.	Series	Color	A	B	C	D	E	F	G	H	J	K	L	M	N	P	Weight
4251	10	Clear	1.500"	.500"	2.875"	.437"	1.000"	.281"	.500"	.188"	.437"	1.000"	.281"	.188"	2.000"	1.000"	.129 lb
4251-Black	10	Black	1.500"	.500"	2.875"	.437"	1.000"	.281"	.500"	.188"	.437"	1.000"	.281"	.188"	2.000"	1.000"	.129 lb
4281	15	Clear	2.250"	.750"	4.310"	.656"	1.500"	.328"	.500"	.500"	.656"	1.500"	.328"	.250"	3.000"	1.500"	.406 lb
4281-Black	15	Black	2.250"	.750"	4.310"	.656"	1.500"	.328"	.500"	.500"	.656"	1.500"	.328"	.250"	3.000"	1.500"	.406 lb

Material Specifications

Material	Alloy*	Finish
Aluminum	6105-T5	Anodized

* Or comparable

Suggested Hardware (Mount to T-Slot)

Part No.	Series	Qty.	Bolt	T-Nut
3393	10	9	1/4-20 x 1/2" BHSCS	Economy
3320	15	9	5/16-18 x 11/16" FBHSCS	Economy

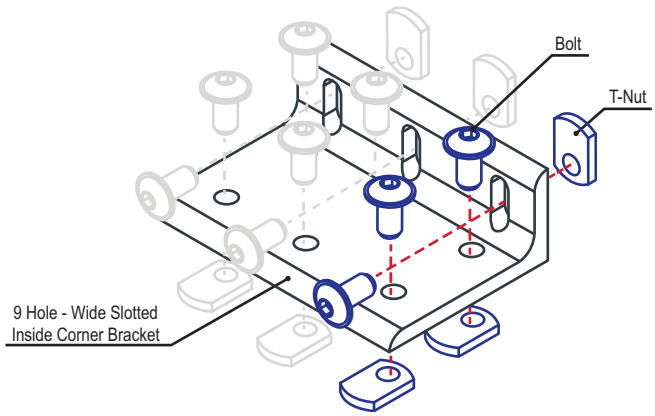

Part Description:

The 10 hole - inside corner bracket is an external fastening method that creates a 90 degree connection. One side of the bracket has six holes comprised of two rows and three columns, while the second side has four centered holes comprised of two rows and two columns. This bracket can be used to connect profiles that are within the same series but of different sizes. It requires no machining services and can provide infinite positioning along the profile T-slot, allowing a large degree of adjustability. The 10 hole - inside corner bracket engages the 2-degree drop-lock feature when the assembly bolts are tightened to the required torque. It is a fastening method that can be repositioned and reused.

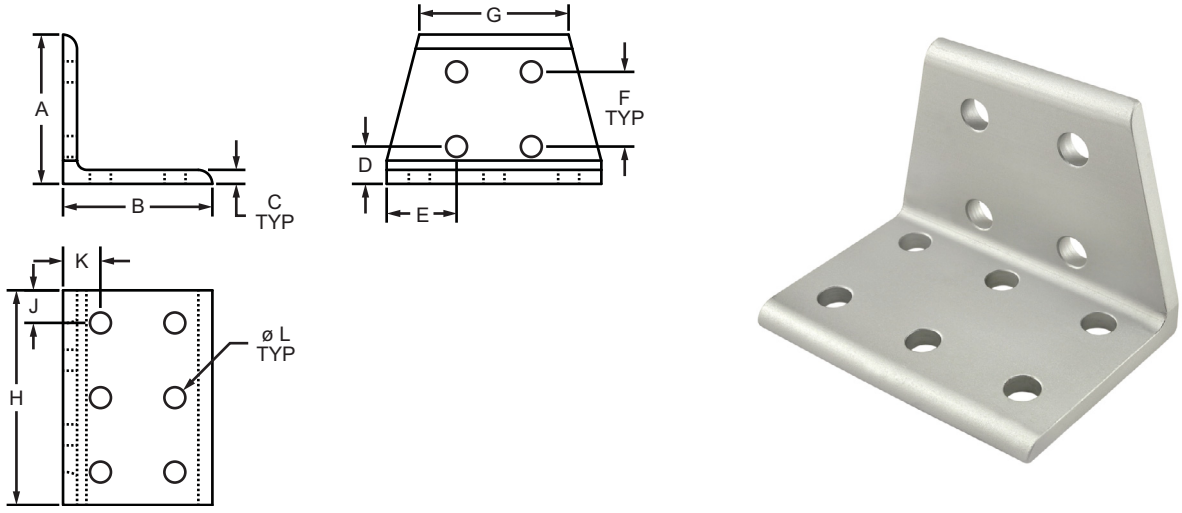

Part No.	Series	Material	Alloy*	Finish	A	B	C	D	E	F	G	H	J	K	L	Weight
4020	10	Aluminum	6105-T5	Clear Anodize	2.000"	2.000"	.188"	.500"	.937"	1.000"	2.000"	2.875"	.437"	.500"	.281"	.168 lb
4020-Black	10			Black Anodize	2.000"	2.000"	.188"	.500"	.937"	1.000"	2.000"	2.875"	.437"	.500"	.281"	.168 lb
4420	15			Clear Anodize	3.000"	3.000"	.250"	.750"	1.405"	1.500"	2.810"	4.310"	.654"	.750"	.328"	.522 lb
4420-Black	15			Black Anodize	3.000"	3.000"	.250"	.750"	1.405"	1.500"	2.810"	4.310"	.654"	.750"	.328"	.522 lb

* Or comparable

Suggested Hardware (Mount to T-Slot)

Part No.	Series	Qty.	Bolt	T-Nut
3393	10	10	1/4-20 x 1/2" BHSCS	Economy
3320	15	10	5/16-18 x 11/16 FBHSCS	Economy

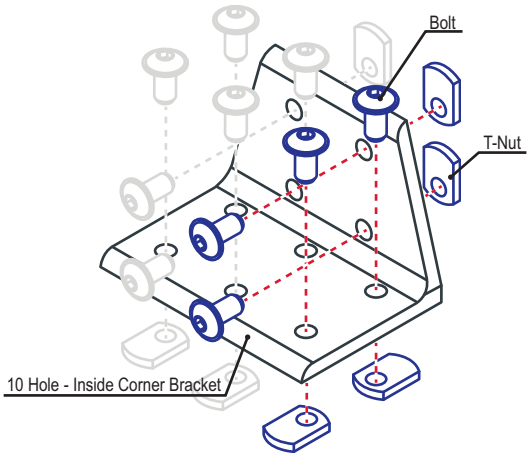

12 Hole - Tall Inside Corner Bracket

Part Description:

The 12 hole - tall inside corner bracket is an external fastening method that creates a 90 degree connection. Each side of the bracket has six holes comprised of three rows and two columns. This fastener requires no machining services and can provide infinite positioning along the profile T-slot, allowing a large degree of adjustability. The 12 hole - tall inside corner bracket engages the 2-degree drop-lock feature when the assembly bolts are tightened to the required torque. It is a fastening method that can be repositioned and reused.

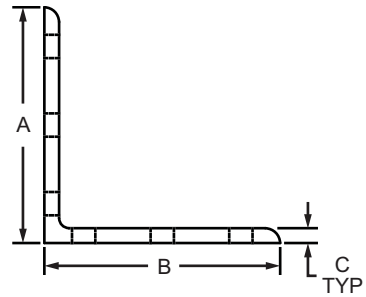

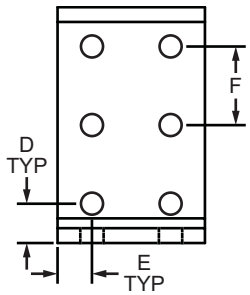

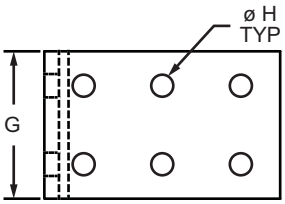

Part No.	Series	Material	Alloy*	Finish	A	B	C	D	E	F	G	H	Weight
4014	10	Aluminum	6105-T5	Clear Anodize	3.000"	3.000"	.188"	.500"	.438"	1.000"	1.875"	.281"	.177 lb
4014-Black	10			Black Anodize	3.000"	3.000"	.188"	.500"	.438"	1.000"	1.875"	.281"	.177 lb
4414	15			Clear Anodize	4.500"	4.500"	.250"	.750"	.656"	1.500"	2.812"	.328"	.560 lb
4414-Black	15			Black Anodize	4.500"	4.500"	.250"	.750"	.656"	1.500"	2.812"	.328"	.560 lb

* Or comparable

Suggested Hardware (Mount to T-Slot)

Part No.	Series	Qty.	Bolt	T-Nut
3393	10	12	1/4-20 x 1/2" BHSCS	Economy
3320	15	12	5/16-18 x 11/16 FBHSCS	Economy

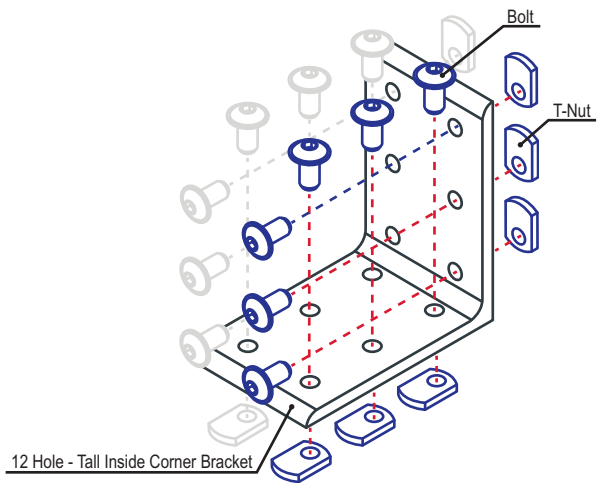

Part Description:

The 12 hole - wide inside corner bracket is an external fastening method that creates a 90 degree connection. Each side of the bracket has six holes comprised of two rows and three columns. This fastener requires no machining services and can provide infinite positioning along the profile T-slot, allowing a large degree of adjustability. The 12 hole - wide inside corner bracket engages the 2-degree drop-lock feature when the assembly bolts are tightened to the required torque. It is a fastening method that can be repositioned and reused.

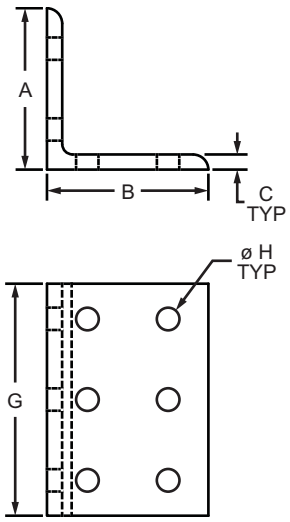

Part No.	Series	Material	Alloy*	Finish	A	B	C	D	E	F	G	H	Weight
4016	10	Aluminum	6105-T5	Clear Anodize	2.000"	2.000"	.188"	.500"	.438"	1.000"	2.875"	.281"	.178 lb
4016-Black	10			Black Anodize	2.000"	2.000"	.188"	.500"	.438"	1.000"	2.875"	.281"	.178 lb
4416	15			Clear Anodize	3.000"	3.000"	.250"	.750"	.656"	1.500"	4.310"	.328"	.564 lb
4416-Black	15			Black Anodize	3.000"	3.000"	.250"	.750"	.656"	1.500"	4.310"	.328"	.564 lb

* Or comparable

Suggested Hardware (Mount to T-Slot)

Part No.	Series	Qty.	Bolt	T-Nut
3393	10	12	1/4-20 x 1/2" BHSCS	Economy
3320	15	12	5/16-18 x 11/16 FBHSCS	Economy

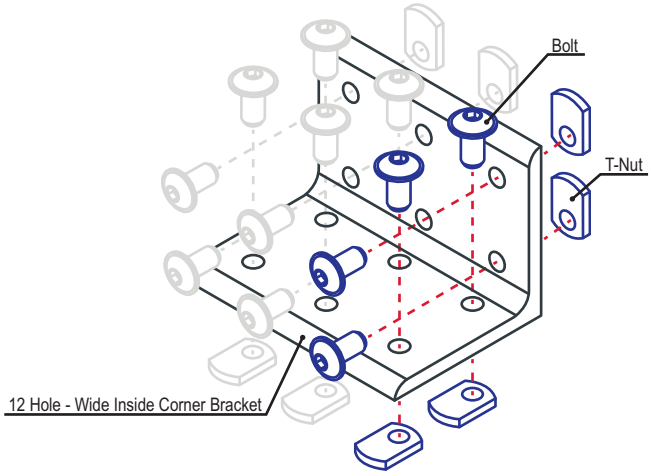

18 Hole - Inside Corner Bracket

Part Description:

The 18 hole - inside corner bracket is an external fastening method that creates a 90 degree connection. Each side of the bracket has nine holes comprised of three rows and three columns. This fastener requires no machining services and can provide infinite positioning along the profile T-slot, allowing a large degree of adjustability. The 18 hole - inside corner bracket engages the 2-degree drop-lock feature when the assembly bolts are tightened to the required torque. It is a fastening method that can be repositioned and reused.

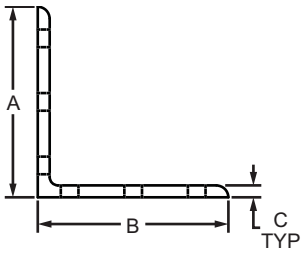

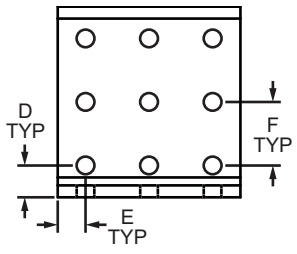

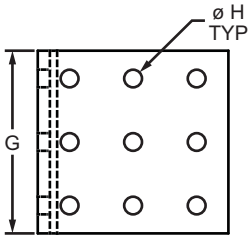

Part No.	Series	Material	Alloy*	Finish	A	B	C	D	E	F	G	H	Weight
4017	10	Aluminum	6105-T5	Clear Anodize	3.000"	3.000"	.188"	.500"	.438"	1.000"	2.875"	.281"	.271 lb
4017-Black	10			Black Anodize	3.000"	3.000"	.188"	.500"	.438"	1.000"	2.875"	.281"	.271 lb
4417	15			Clear Anodize	4.500"	4.500"	.250"	.750"	.656"	1.500"	4.310"	.328"	.861 lb
4417-Black	15			Black Anodize	4.500"	4.500"	.250"	.750"	.656"	1.500"	4.310"	.328"	.861 lb

* Or comparable

Suggested Hardware (Mount to T-Slot)

Part No.	Series	Qty.	Bolt	T-Nut
3393	10	18	1/4-20 x 1/2" BHSCS	Economy
3320	15	18	5/16-18 x 11/16 FBHSCS	Economy

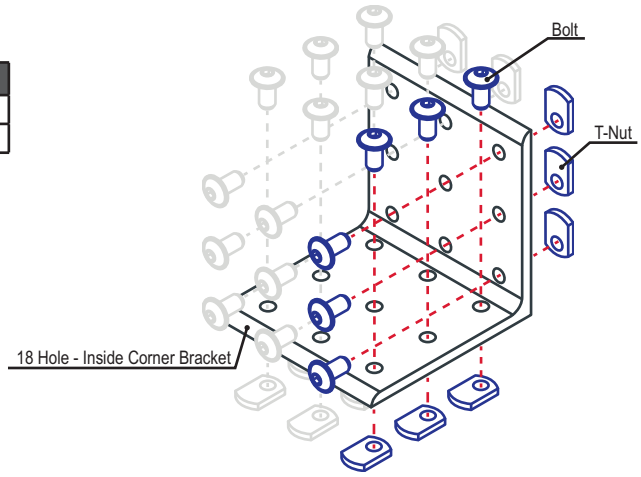

Part Description:

The 3 way - triangular corner bracket is a die-cast external fastening method that is typically used to create a corner connection between three profiles. It is a connection method that is recessed within the corner and offers stability. The simplicity of this bracket makes it easy to connect multiple profiles. The 3 way - triangular corner bracket requires an end tap machining service (see page 861) on each of the connecting profiles. For triangular corner bracket cover caps see page 791.

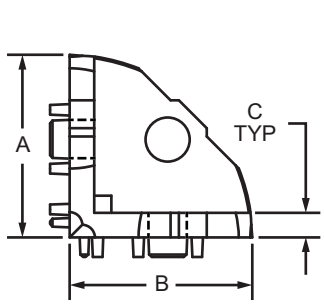

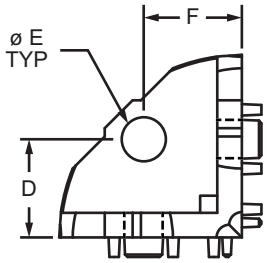

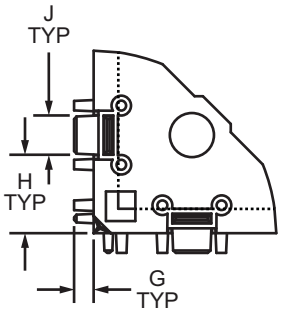

Part No.	Series	Material	Finish	A	B	C	D	E	F	G	H	J	Weight
14113	15	Zinc	Natural	1.465"	1.465"	.197"	.787"	.354"	.787"	.157"	.630"	.315"	.148 lb
14114	40			37.20mm	37.20mm	5.00mm	20.00mm	9.00mm	20.00mm	4.00mm	16.00mm	8.00mm	.0763 kg

Required Machining Services

Machining Type	Machined	Reference Page
Tap Profile End	Mounting Profiles	861

Suggested Hardware (Mount to Profile End)

Part No.	Series	Qty.	Bolt
3114	15	3	5/16-18 x 3/4 BHSCS
11-8320	40	3	M8 x 20mm BHSCS

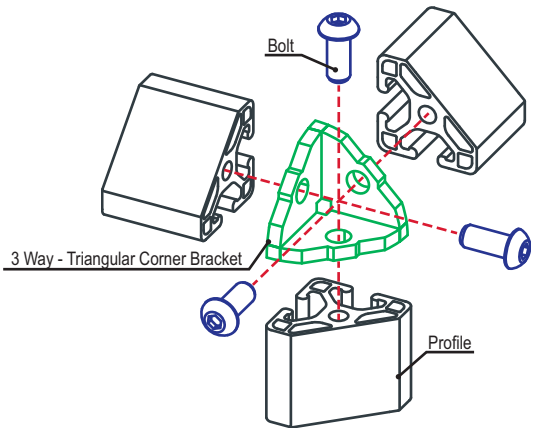

3 Way - Rounded Corner Bracket

Part Description:

The 3 way - rounded corner bracket is a die-cast external fastening method that is typically used to create an outside corner connection between three profiles. It offers stability and can also be reused and repositioned. The simplicity of this bracket makes it easy to connect multiple profiles. The 3 way - rounded corner bracket requires an end tap machining service (see page 861) on each of the connecting profiles. For rounded corner bracket cover caps see page 791.

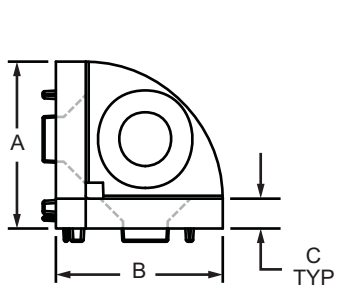

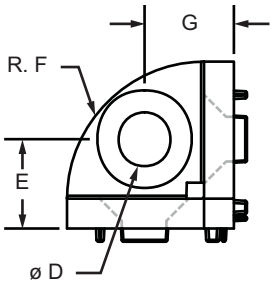

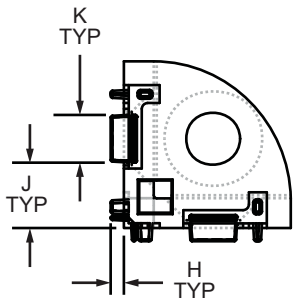

Part No.	Series	Material	Finish	A	B	C	D	E	F	G	H	J	K	Weight
14112	30	Zinc	Natural	28.00mm	28.00mm	5.00mm	9.00mm	15.00mm	23.00mm	15.00mm	2.20mm	11.00mm	8.00mm	.0367 kg

Required Machining Services

Machining Type	Machined	Reference Page
Tap Profile End	Mounting Profiles	861

Suggested Hardware (Mount to Profile End)

Part No.	Series	Qty.	Bolt
11-8716	30	3	M8 x 16mm Black Zinc FHSCS

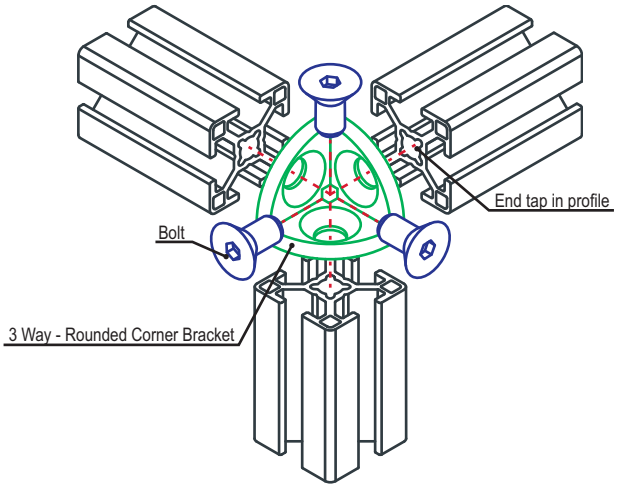

Part Description:

The 2 hole - lite transition inside corner bracket creates a 90 degree connection between profiles within the same product type (either fractional or metric) but of differing series. It is a lightweight external fastening method that requires no machining services. The bracket is flush with the profiles, taking up less space in the overall design. This option can provide infinite positioning along the profile T-slot, allowing for a large degree of adjustability as well as being reconfigurable and reusable.

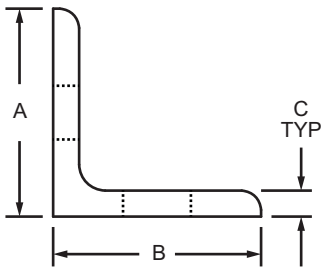

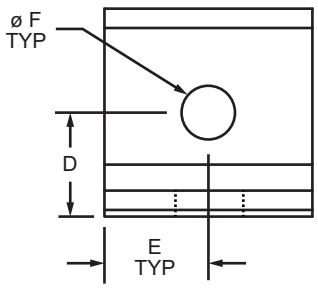

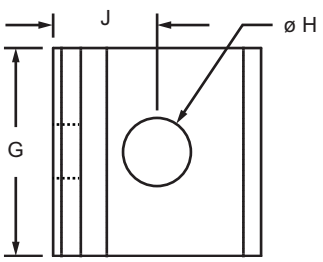

Part No.	Series	Material	Alloy*	Finish	A	B	C	D	E	F	G	H	J	Weight
4509	10 to 15	Aluminum	6105-T5	Clear Anodize	1.000"	1.000"	.125"	.500"	.500"	.257"	1.000"	.328"	.500"	.020 lb
4509-Black	10 to 15			Black Anodize	1.000"	1.000"	.125"	.500"	.500"	.257"	1.000"	.328"	.500"	.020 lb
65-4509	25 to 40			Clear Anodize	25.00mm	25.00mm	3.00mm	12.50mm	12.50mm	6.30mm	25.00mm	8.30mm	12.50mm	.0086 kg
65-4509-Black	25 to 40			Black Anodize	25.00mm	25.00mm	3.00mm	12.50mm	12.50mm	6.30mm	25.00mm	8.30mm	12.50mm	.0086 kg

* Or comparable

Suggested Hardware (Mount to T-Slot)

Part No.	Series	Qty.	Bolt	T-Nut
3386	10 to 15	1	1/4-20 x 3/8" FBHSCS	Economy
3319		1	5/16-18 x 1/2 FBHSCS	Economy
75-3404	25 to 40	1	M6 x 10mm BHSCS	Economy
75-3421		1	M8 x 12mm BHSCS	Economy

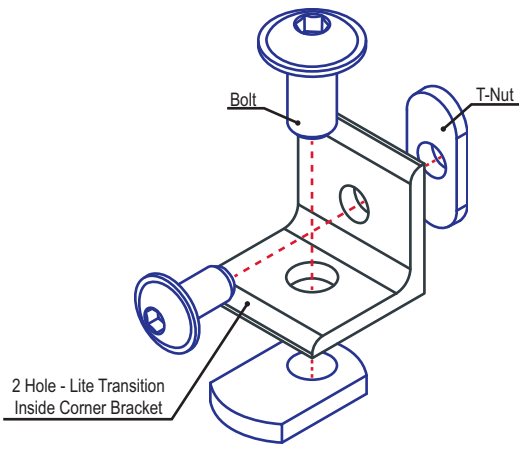

2 Hole - Transition Inside Corner Bracket

Part Description:

The 2 hole - transition inside corner bracket creates a 90 degree connection between profiles within the same product type (either fractional or metric) but of differing series. It is an external fastening method that requires no machining services. The bracket is flush with the profiles, taking up less space in the overall design. This option can provide infinite positioning along the profile T-slot, allowing for a large degree of adjustability as well as being reconfigurable and reusable.

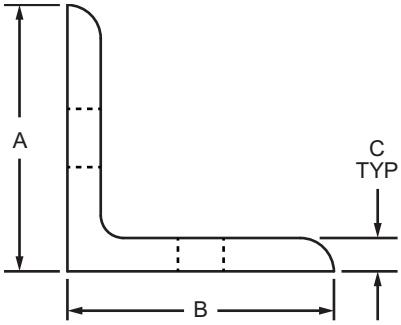

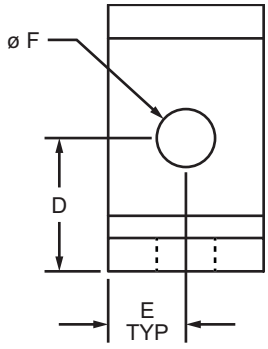

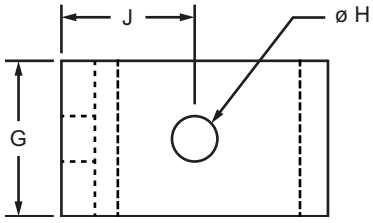

Part No.	Series	Material	Alloy*	Finish	A	B	C	D	E	F	G	H	J	Weight
4503	10 to 15	Aluminum	6105-T5	Clear Anodize	1.500"	1.500"	.188"	.750"	.438"	.328"	.875"	.257"	.750"	.041 lb
4503-Black	10 to 15			Black Anodize	1.500"	1.500"	.188"	.750"	.438"	.328"	.875"	.257"	.750"	.041 lb
65-4503	25 to 40			Clear Anodize	40.00mm	40.00mm	6.00mm	20.00mm	11.00mm	8.33mm	22.00mm	6.30mm	20.00mm	.0248 kg
65-4503-Black	25 to 40			Black Anodize	40.00mm	40.00mm	6.00mm	20.00mm	11.00mm	8.33mm	22.00mm	6.30mm	20.00mm	.0248 kg

* Or comparable

Suggested Hardware (Mount to T-Slot)

Part No.	Series	Qty.	Bolt	T-Nut
3393	10 to 15	1	1/4-20 x 1/2" BHSCS	Economy
3435		1	5/16-18 x 5/8 BHSCS, Washer	Economy
75-3405	25 to 40	1	M6 x 12mm BHSCS	Economy
75-3422		1	M8 x 16mm BHSCS	Economy

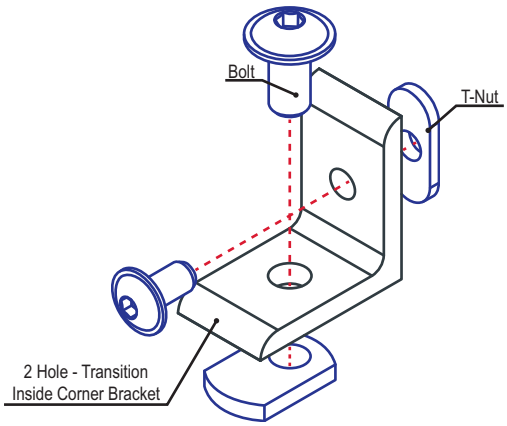

4 Hole - Tall Transition Inside Corner Bracket

Part Description:

The 4 hole - tall transition inside corner bracket creates a 90 degree connection between profiles within the same product type (either fractional or metric) but of differing series. Each side of the bracket has two holes stacked one on top of the other. It is an external fastening method that requires no machining services. The bracket is flush with the profiles, taking up less space in the overall design. This option can provide infinite positioning along the profile T-slot, allowing for a large degree of adjustability as well as being reconfigurable and reusable.

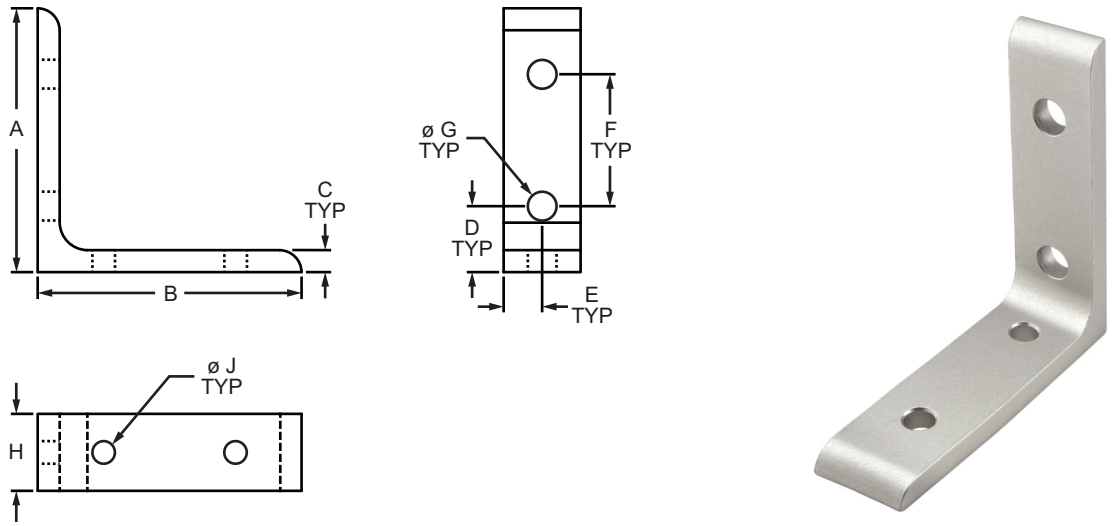

Part No.	Series	Material	Alloy*	Finish	A	B	C	D	E	F	G	H	J	Weight
4504	10 to 15	Aluminum	6105-T5	Clear Anodize	3.000"	3.000"	.250"	.750"	.438"	1.500"	.328"	.875"	.257"	.113 lb
4504-Black	10 to 15			Black Anodize	3.000"	3.000"	.250"	.750"	.438"	1.500"	.328"	.875"	.257"	.113 lb
65-4504	25 to 40			Clear Anodize	80.00mm	80.00mm	6.00mm	20.00mm	11.00mm	40.00mm	8.30mm	22.00mm	6.30mm	.0513 kg
65-4504-Black	25 to 40			Black Anodize	80.00mm	80.00mm	6.00mm	20.00mm	11.00mm	40.00mm	8.30mm	22.00mm	6.30mm	.0513 kg

* Or comparable

Suggested Hardware (Mount to T-Slot)

Part No.	Series	Qty.	Bolt	T-Nut
3393	10 to 15	2	1/4-20 x 1/2" BHSCS	Economy
3320		2	5/16-18 x 11/16" FBHSCS	Economy
75-3405	25 to 40	2	M6 x 12mm BHSCS	Economy
75-3422		2	M8 x 16mm BHSCS	Economy

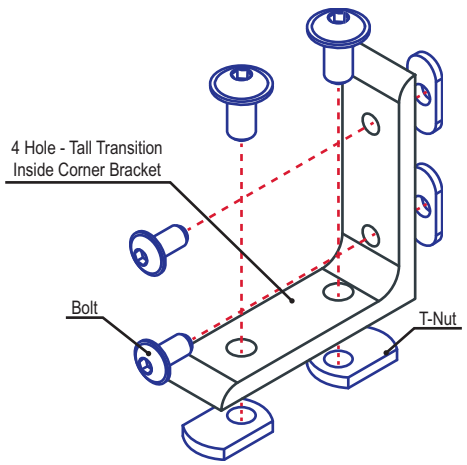

4 Hole - Lite Wide Transition Inside Corner Bracket

Part Description:

The 4 hole - lite wide transition inside corner bracket creates a 90 degree connection between fractional profiles of differing series. It is a lightweight bracket with two adjacent holes on each side. It is an external fastening method that requires no machining services. The bracket is flush with the profiles, taking up less space in the overall design. This option can provide infinite positioning along the profile T-slot, allowing for a large degree of adjustability as well as being reconfigurable and reusable.

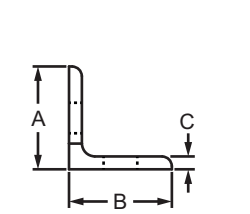

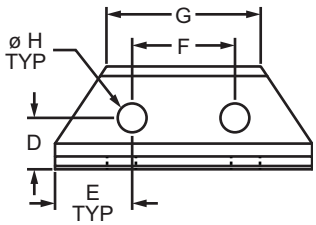

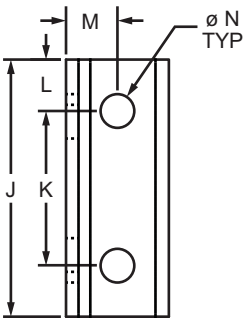

Part No.	Series	Color	A	B	C	D	E	F	G	H	J	K	L	M	N	Weight
4511	10 to 15	Clear	1.000"	1.000"	.125"	.500"	.750"	1.000"	1.500"	.281"	2.500"	1.500"	.500"	.500"	.328"	.048 lb
4511-Black	10 to 15	Black	1.000"	1.000"	.125"	.500"	.750"	1.000"	1.500"	.281"	2.500"	1.500"	.500"	.500"	.328"	.048 lb

Material Specifications

Material	Alloy*	Finish
Aluminum	6105-T5	Anodize

* Or comparable

Suggested Hardware (Mount to T-Slot)

Part No.	Series	Qty.	Bolt	T-Nut
3386	10 to 15	2	1/4-20 x 3/8" FBHSCS	Economy
3319		2	5/16-18 x 1/2" FBHSCS	Economy

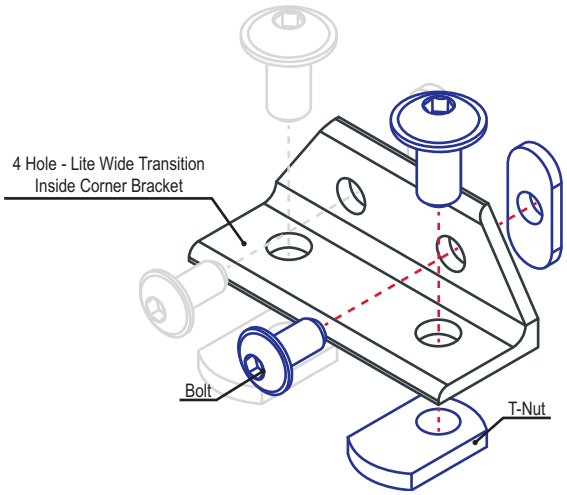

Part Description:

The 4 hole - wide transition inside corner bracket creates a 90 degree connection between profiles within the same product type (either fractional or metric) but of differing series. It has two adjacent holes on each side and is an external fastening method that requires no machining services. The bracket is flush with the profiles, taking up less space in the overall design. This option can provide infinite positioning along the profile T-slot, allowing for a large degree of adjustability as well as being reconfigurable and reusable.

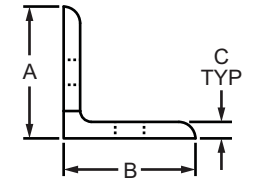

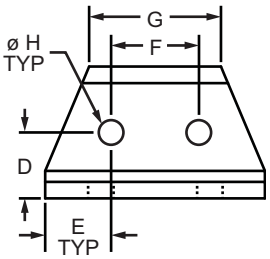

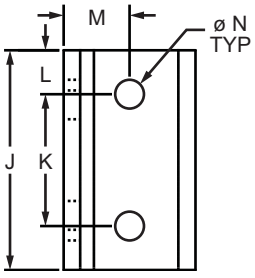

Part No.	Series	Color	A	B	C	D	E	F	G	H	J	K	L	M	N	Weight
4512	10 to 15	Clear	1.500"	1.500"	.188"	.750"	.750"	1.000"	1.500"	.281"	2.500"	1.500"	.500"	.750"	.328"	.108 lb
4512-Black	10 to 15	Black	1.500"	1.500"	.188"	.750"	.750"	1.000"	1.500"	.281"	2.500"	1.500"	.500"	.750"	.328"	.108 lb
65-4512	25 to 40	Clear	40.00mm	40.00mm	6.00mm	20.00mm	18.75mm	25.00mm	40.00mm	6.30mm	62.50mm	40.00mm	11.25mm	20.00mm	8.30mm	.0671 kg
65-4512-Black	25 to 40	Black	40.00mm	40.00mm	6.00mm	20.00mm	18.75mm	25.00mm	40.00mm	6.30mm	62.50mm	40.00mm	11.25mm	20.00mm	8.30mm	.0671 kg

Material Specifications

Material	Alloy*	Finish
Aluminum	6105-T5	Anodize

* Or comparable

Suggested Hardware (Mount to T-Slot)

Part No.	Series	Qty.	Bolt	T-Nut
3393	10 to 15	2	1/4-20 x 1/2" BHSCS	Economy
3320		2	5/16-18 x 11/16" FBHSCS	Economy
75-3405	25 to 40	2	M6 x 12mm BHSCS	Economy
75-3422		2	M8 x 16mm BHSCS	Economy

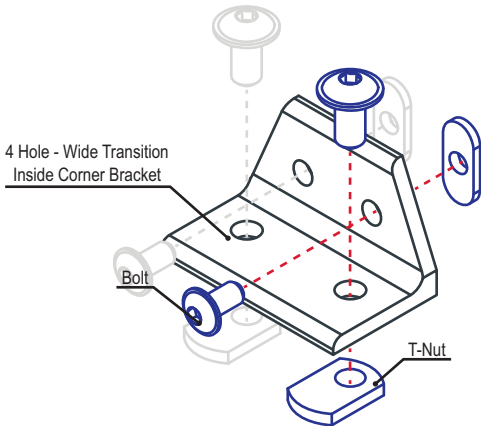

8 Hole - Center Transition Inside Corner Bracket

Part Description:

The 8 hole - center transition inside corner bracket creates a 90 degree connection between profiles within the same product type (either fractional or metric) but of differing series. It has four holes, comprised of two rows and two columns, on each side and it is an external fastening method that requires no machining services. The bracket is flush with the profiles, taking up less space in the overall design. This option can provide infinite positioning along the profile T-slot, allowing for a large degree of adjustability as well as being reconfigurable and reusable.

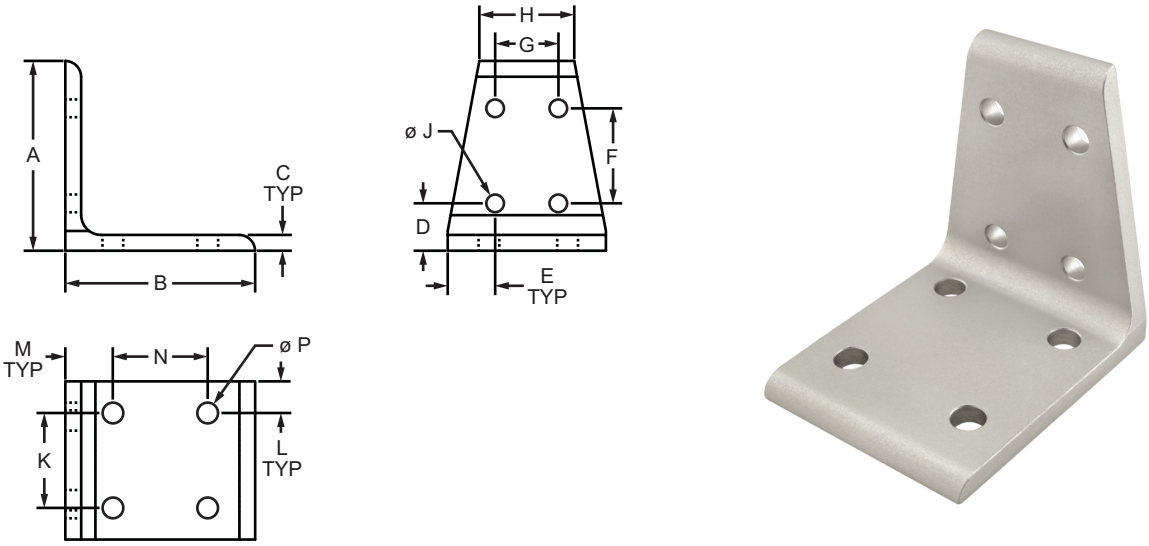

Part No.	Series	Color	A	B	C	D	E	F	G	H	J	K	L	M	N	P	Weight
4513	10 to 15	Clear	3.000"	3.000"	.250"	.750"	.750"	1.500"	1.000"	1.500"	.281"	1.500"	.500"	.750"	1.500"	.328"	.305 lb
4513-Black	10 to 15	Black	3.000"	3.000"	.250"	.750"	.750"	1.500"	1.000"	1.500"	.281"	1.500"	.500"	.750"	1.500"	.328"	.305 lb
65-4513	25 to 40	Clear	80.00mm	80.00mm	6.00mm	20.00mm	18.75mm	40.00mm	25.00mm	40.00mm	6.30mm	40.00mm	11.25mm	20.00mm	40.00mm	8.30mm	.1370 kg
65-4513-Black	25 to 40	Black	80.00mm	80.00mm	6.00mm	20.00mm	18.75mm	40.00mm	25.00mm	40.00mm	6.30mm	40.00mm	11.25mm	20.00mm	40.00mm	8.30mm	.1370 kg

Material Specifications

Material	Alloy*	Finish
Aluminum	6105-T5	Anodize

* Or comparable

Suggested Hardware (Mount to T-Slot)

Part No.	Series	Qty.	Bolt	T-Nut
3393	10 to 15	4	1/4-20 x 1/2" BHSCS	Economy
3320		4	5/16-18 x 11/16" FBHSCS	Economy
75-3405	25 to 40	4	M6 x 12mm BHSCS	Economy
75-3422		4	M8 x 16mm BHSCS	Economy

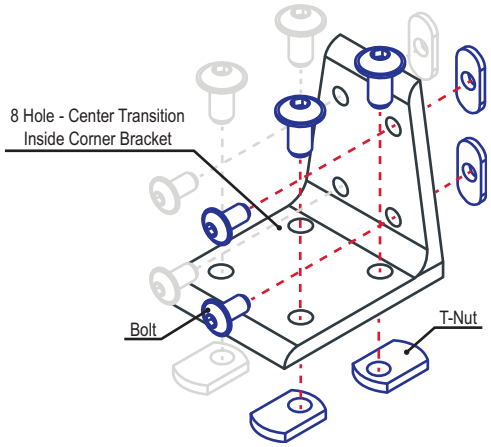

Part Description:

The 2 hole - gusseted inside corner bracket is a strong, external fastening method that creates a 90 degree connection. It requires no machining services and can provide infinite positioning along the profile T-slot, allowing a large degree of adjustability. The shape of the gusset provides extra material, strengthening the connection. It is a fastening method that can be repositioned and reused.

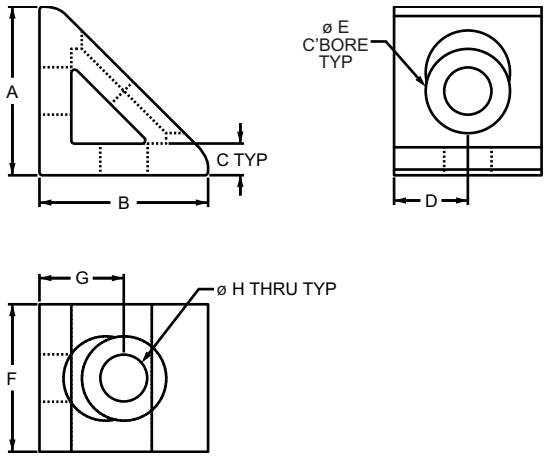

Part No.	Series	Material	Alloy*	Finish	A	B	C	D	E	F	G	H	Weight
4132	10	Aluminum	6105-T5	Clear Anodize	1.000"	1.000"	.188"	.438"	.500"	.875"	.500"	.281"	.035 lb
4132-Black	10			Black Anodize	1.000"	1.000"	.188"	.438"	.500"	.875"	.500"	.281"	.035 lb
4332	15			Clear Anodize	1.500"	1.500"	.250"	.656"	.750"	1.312"	.750"	.328"	.111 lb
4332-Black	15			Black Anodize	1.500"	1.500"	.250"	.656"	.750"	1.312"	.750"	.328"	.111 lb
25-4132	25			Clear Anodize	25.00mm	25.00mm	4.00mm	11.00mm	12.70mm	22.00mm	12.50mm	6.80mm	.0140 kg
25-4132-Black	25			Black Anodize	25.00mm	25.00mm	4.00mm	11.00mm	12.70mm	22.00mm	12.50mm	6.80mm	.0140 kg
30-4332	30			Clear Anodize	30.00mm	30.00mm	4.00mm	13.50mm	12.70mm	27.00mm	15.00mm	6.81mm	.0228 kg
30-4332-Black	30			Black Anodize	30.00mm	30.00mm	4.00mm	13.50mm	12.70mm	27.00mm	15.00mm	6.81mm	.0228 kg
40-4332	40			Clear Anodize	40.00mm	40.00mm	6.00mm	18.00mm	20.00mm	36.00mm	20.00mm	8.30mm	.0567 kg
40-4332-Black	40			Black Anodize	40.00mm	40.00mm	6.00mm	18.00mm	20.00mm	36.00mm	20.00mm	8.30mm	.0567 kg
45-4332	45			Clear Anodize	45.00mm	45.00mm	6.00mm	21.00mm	20.00mm	42.00mm	22.50mm	8.33mm	.0802 kg
45-4332-Black	45			Black Anodize	45.00mm	45.00mm	6.00mm	21.00mm	20.00mm	42.00mm	22.50mm	8.33mm	.0802 kg

* Or comparable

Suggested Hardware (Mount to T-Slot)

Part No.	Series	Qty.	Bolt	T-Nut
3393	10	2	1/4-20 x 1/2" BHSCS	Economy
3320	15	2	5/16-18 x 11/16" FBHSCS	Economy
75-3404	25	2	M6 x 10mm BHSCS	Economy
75-3600	30	2	M6 x 12mm BHSCS	Drop-In
75-3422	40	2	M8 x 16mm BHSCS	Economy
75-3619	45	2	M8 x 18mm BHSCS	Drop-In

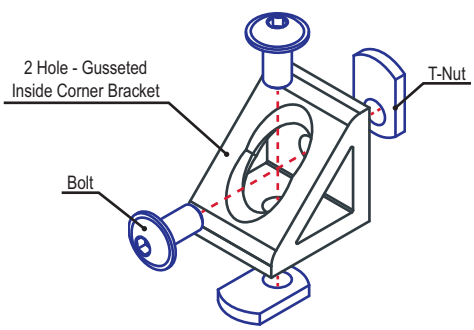

4 Hole - Tall Gusseted Inside Corner Bracket

Part Description:

The 4 hole - tall gusseted inside corner bracket is a strong, external fastening method that creates a 90 degree connection. Each side of the bracket has two holes stacked one on top of the other. It requires no machining services and can provide infinite positioning along the profile T-slot, allowing a large degree of adjustability. The shape of the gusset provides extra material, strengthening the connection. It is a fastening method that can be repositioned and reused.

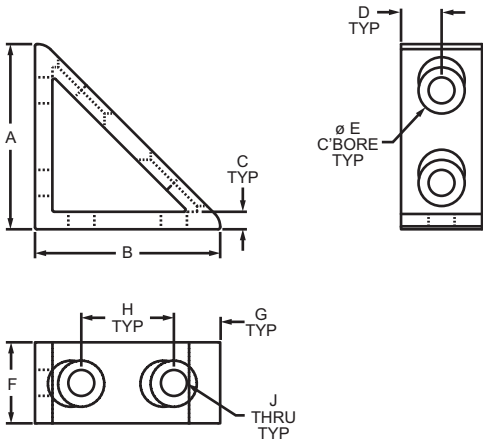

Part No.	Series	Material	Alloy*	Finish	A	B	C	D	E	F	G	H	J	Weight
4136	10	Aluminum	6105-T5	Clear Anodize	2.000"	2.000"	.188"	.438"	.500"	.875"	.500"	1.000"	.281"	.078 lb
4136-Black	10			Black Anodize	2.000"	2.000"	.188"	.438"	.500"	.875"	.500"	1.000"	.281"	.078 lb
4336	15			Clear Anodize	3.000"	3.000"	.250"	.656"	.750"	1.312"	.750"	1.500"	.328"	.243 lb
4336-Black	15			Black Anodize	3.000"	3.000"	.250"	.656"	.750"	1.312"	.750"	1.500"	.328"	.243 lb
25-4136	25			Clear Anodize	50.00mm	50.00mm	4.00mm	11.00mm	12.70mm	22.00mm	12.50mm	25.00mm	6.80mm	.0354 kg
25-4136-Black	25			Black Anodize	50.00mm	50.00mm	4.00mm	11.00mm	12.70mm	22.00mm	12.50mm	25.00mm	6.80mm	.0354 kg
30-4336	30			Clear Anodize	60.00mm	60.00mm	4.00mm	13.50mm	12.70mm	27.00mm	15.00mm	30.00mm	6.81mm	.0496 kg
30-4336-Black	30			Black Anodize	60.00mm	60.00mm	4.00mm	13.50mm	12.70mm	27.00mm	15.00mm	30.00mm	6.81mm	.0496 kg
40-4336	40			Clear Anodize	80.00mm	80.00mm	6.00mm	18.00mm	20.00mm	36.00mm	20.00mm	40.00mm	8.30mm	.1234 kg
40-4336-Black	40			Black Anodize	80.00mm	80.00mm	6.00mm	18.00mm	20.00mm	36.00mm	20.00mm	40.00mm	8.30mm	.1234 kg
45-4336	45			Clear Anodize	90.00mm	90.00mm	6.00mm	21.00mm	20.00mm	42.00mm	22.50mm	45.00mm	8.33mm	.1747 kg
45-4336-Black	45			Black Anodize	90.00mm	90.00mm	6.00mm	21.00mm	20.00mm	42.00mm	22.50mm	45.00mm	8.33mm	.1747 kg

* Or comparable

Suggested Hardware (Mount to T-Slot)

Part No.	Series	Qty.	Bolt	T-Nut
3393	10	4	1/4-20 x 1/2" BHSCS	Economy
3320	15	4	5/16-18 x 11/16" FBHSCS	Economy
75-3404	25	4	M6 x 10mm BHSCS	Economy
75-3600	30	4	M6 x 12mm BHSCS	Drop-In
75-3422	40	4	M8 x 16mm BHSCS	Economy
75-3619	45	4	M8 x 18mm BHSCS	Drop-In

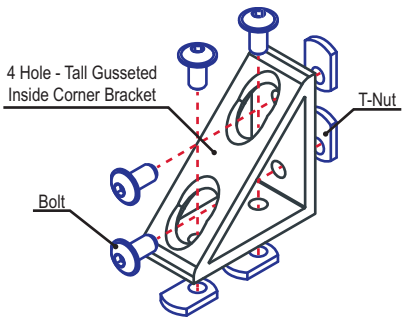

4 Hole - Wide Gusseted Inside Corner Bracket

Part Description:

The 4 hole - wide gusseted inside corner bracket is a strong, external fastening method that creates a 90 degree connection. There are two adjacent holes on each side of the bracket. It requires no machining services and can provide infinite positioning along the profile T-slot, allowing a large degree of adjustability. The shape of the gusset provides extra material, strengthening the connection. It is a fastening method that can be repositioned and reused.

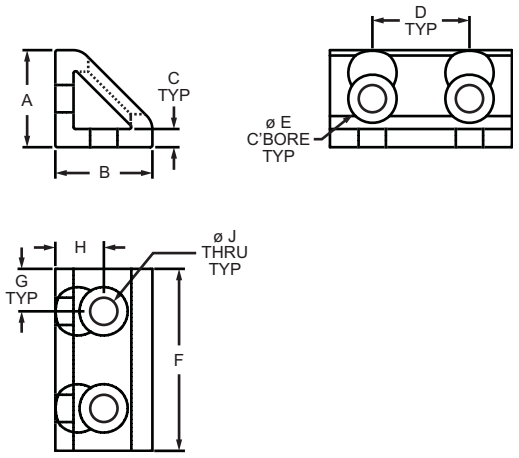

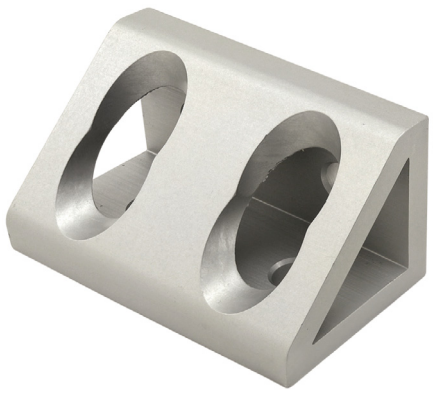

Part No.	Series	Material	Alloy*	Finish	A	B	C	D	E	F	G	H	J	Weight
4134	10	Aluminum	6105-T5	Clear Anodize	1.000"	1.000"	.188"	1.000"	.500"	1.875"	.438"	.500"	.281"	.077 lb
4134-Black	10			Black Anodize	1.000"	1.000"	.188"	1.000"	.500"	1.875"	.438"	.500"	.281"	.077 lb
4334	15			Clear Anodize	1.500"	1.500"	.250"	1.500"	.750"	2.812"	.656"	.750"	.328"	.241 lb
4334-Black	15			Black Anodize	1.500"	1.500"	.250"	1.500"	.750"	2.812"	.656"	.750"	.328"	.241 lb
25-4134	25			Clear Anodize	25.00mm	25.00mm	4.00mm	25.00mm	12.70mm	47.00mm	11.00mm	12.50mm	6.80mm	.0299 kg
25-4134-Black	25			Black Anodize	25.00mm	25.00mm	4.00mm	25.00mm	12.70mm	47.00mm	11.00mm	12.50mm	6.80mm	.0299 kg
30-4134	30			Clear Anodize	30.00mm	30.00mm	4.00mm	30.00mm	12.70mm	57.00mm	13.50mm	15.00mm	6.81mm	.0484 kg
30-4134-Black	30			Black Anodize	30.00mm	30.00mm	4.00mm	30.00mm	12.70mm	57.00mm	13.50mm	15.00mm	6.81mm	.0484 kg
40-4334	40			Clear Anodize	40.00mm	40.00mm	6.00mm	40.00mm	20.00mm	76.00mm	18.00mm	20.00mm	8.30mm	.1207 kg
40-4334-Black	40			Black Anodize	40.00mm	40.00mm	6.00mm	40.00mm	20.00mm	76.00mm	18.00mm	20.00mm	8.30mm	.1207 kg
45-4334	45			Clear Anodize	45.00mm	45.00mm	6.00mm	45.00mm	20.00mm	87.00mm	21.00mm	22.50mm	8.33mm	.1669 kg
45-4334-Black	45			Black Anodize	45.00mm	45.00mm	6.00mm	45.00mm	20.00mm	87.00mm	21.00mm	22.50mm	8.33mm	.1669 kg

* Or comparable

Suggested Hardware (Mount to T-Slot)

Part No.	Series	Qty.	Bolt	T-Nut
3393	10	4	1/4-20 x 1/2" BHSCS	Economy
3320	15	4	5/16-18 x 11/16" FBHSCS	Economy
75-3404	25	4	M6 x 10mm BHSCS	Economy
75-3600	30	4	M6 x 12mm BHSCS	Drop-In
75-3422	40	4	M8 x 16mm BHSCS	Economy
75-3619	45	4	M8 x 18mm BHSCS	Drop-In

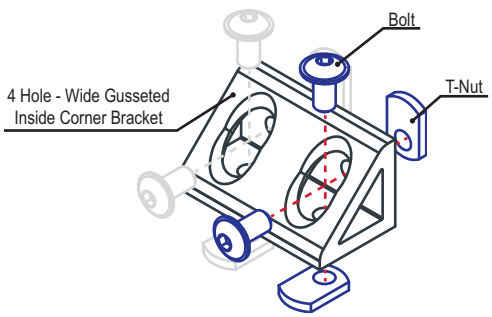

8 Hole - Gusseted Inside Corner Bracket

Part Description:

The 8 hole - gusseted inside corner bracket is a strong, external fastening method that creates a 90 degree connection. It has four holes, comprised of two rows and two columns, on each side of the bracket. It requires no machining services and can provide infinite positioning along the profile T-slot, allowing a large degree of adjustability. The shape of the gusset provides extra material, strengthening the connection. It is a fastening method that can be repositioned and reused.

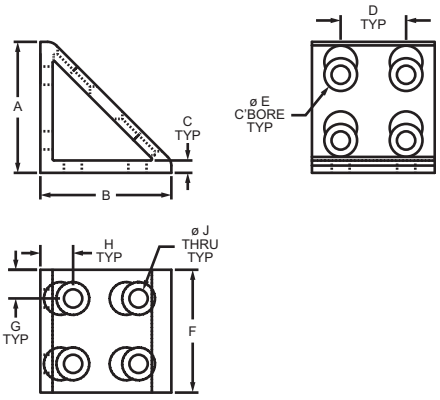

Part No.	Series	Material	Alloy*	Finish	A	B	C	D	E	F	G	H	J	Weight
4138	10	Aluminum	6105-T5	Clear Anodize	2.000"	2.000"	.188"	1.000"	.500"	1.875"	.438"	.500"	.281"	.170 lb
4138-Black	10			Black Anodize	2.000"	2.000"	.188"	1.000"	.500"	1.875"	.438"	.500"	.281"	.170 lb
4338	15			Clear Anodize	3.000"	3.000"	.250"	1.500"	.750"	2.812"	.656"	.750"	.328"	.532 lb
4338-Black	15			Black Anodize	3.000"	3.000"	.250"	1.500"	.750"	2.812"	.656"	.750"	.328"	.532 lb
25-4138	25			Clear Anodize	50.00mm	50.00mm	4.00mm	25.00mm	12.70mm	47.00mm	11.00mm	12.50mm	6.80mm	.0662 kg
25-4138-Black	25			Black Anodize	50.00mm	50.00mm	4.00mm	25.00mm	12.70mm	47.00mm	11.00mm	12.50mm	6.80mm	.0662 kg
30-4338	30			Clear Anodize	60.00mm	60.00mm	4.00mm	30.00mm	12.70mm	57.00mm	13.50mm	15.00mm	6.81mm	.1054 kg
30-4338-Black	30			Black Anodize	60.00mm	60.00mm	4.00mm	30.00mm	12.70mm	57.00mm	13.50mm	15.00mm	6.81mm	.1054 kg
40-4338	40			Clear Anodize	80.00mm	80.00mm	6.00mm	40.00mm	20.00mm	76.00mm	18.00mm	20.00mm	8.30mm	.2626 kg
40-4338-Black	40			Black Anodize	80.00mm	80.00mm	6.00mm	40.00mm	20.00mm	76.00mm	18.00mm	20.00mm	8.30mm	.2626 kg
45-4338	45			Clear Anodize	90.00mm	90.00mm	6.00mm	45.00mm	20.00mm	87.00mm	21.00mm	22.50mm	8.33mm	.3633 kg
45-4338-Black	45			Black Anodize	90.00mm	90.00mm	6.00mm	45.00mm	20.00mm	87.00mm	21.00mm	22.50mm	8.33mm	.3633 kg

* Or comparable

Suggested Hardware (Mount to T-Slot)

Part No.	Series	Qty.	Bolt	T-Nut
3393	10	8	1/4-20 x 1/2" BHSCS	Economy
3320	15	8	5/16-18 x 11/16" FBHSCS	Economy
75-3404	25	8	M6 x 10mm BHSCS	Economy
75-3600	30	8	M6 x 12mm BHSCS	Drop-In
75-3422	40	8	M8 x 16mm BHSCS	Economy
75-3619	45	8	M8 x 18mm BHSCS	Drop-In

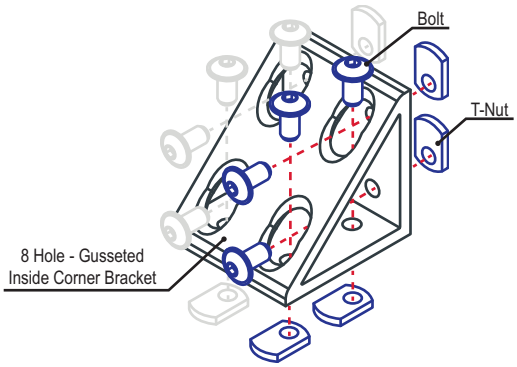

Part Description:

The 3 way - squared corner connector is an external fastening method that is typically used to create a corner connection between three profiles. It is a heavy-duty connection that is simple to use and provides a polished look. The 3 way - squared corner connector requires an end tap machining service (see page 861) on the mating profiles.

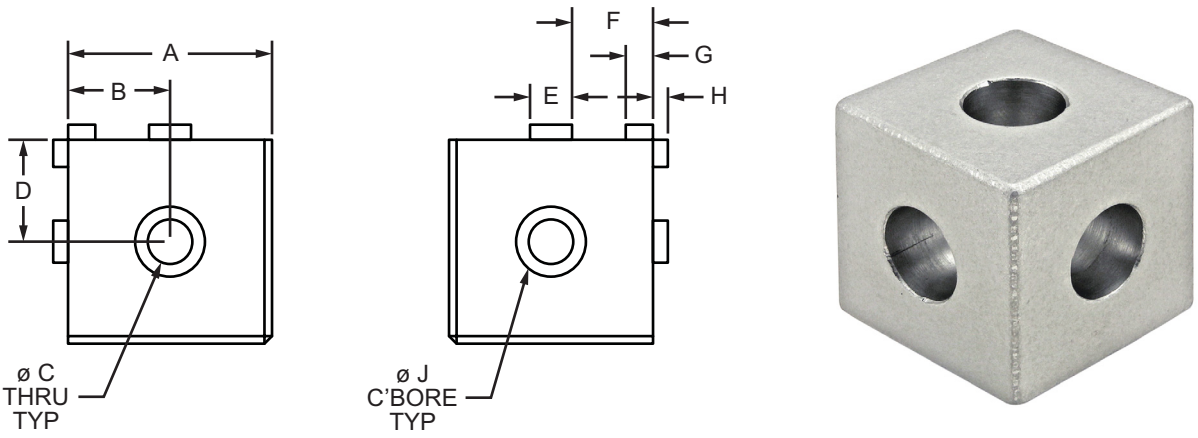

Part No.	Series	Material	Alloy*	Finish	A	B	C	D	E	F	G	H	J	Weight
4042	10	Aluminum	6105-T5	Clear Anodize	1.000"	.500"	.257"	.500"	.244"	.378"	.117"	.087"	.406"	.074 lb
4042-Black	10			Black Anodize	1.000"	.500"	.257"	.500"	.244"	.378"	.117"	.087"	.406"	.074 lb
4442	15			Clear Anodize	1.500"	.750"	.328"	.750"	.310"	.595"	.200"	.110"	.515"	.265 lb
4442-Black	15			Black Anodize	1.500"	.750"	.328"	.750"	.310"	.595"	.200"	.110"	.515"	.265 lb

* Or comparable

Required Machining Services

Machining Type	Machined	Reference Page
Tap Profile End	Mounting Profiles	861

Suggested Hardware (Mount to Profile End)

Part No.	Series	Qty.	Bolt
3017	10	3	1/4-20 x 1" Low Head Socket Cap Screw
3018	15	3	5/16-18 x 1.25" Low Head Socket Cap Screw

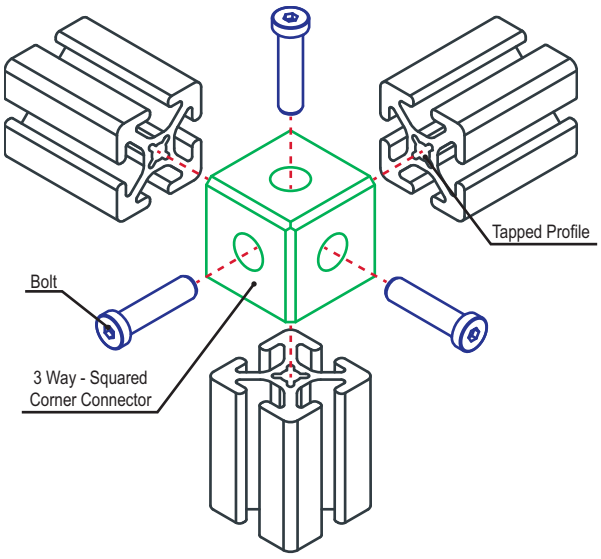

2 Way - Light Squared Corner Connector

Part Description:

The 2 way - light squared corner connector is a die-cast external fastening method that is typically used to create a squared corner connection between two profiles. The fastener is lightweight and has two access holes; it includes the cover caps for the holes, to provide a finished look. The 2 way - light squared corner connector requires an end tap machining service (see page 861) on the mating profiles.

Part Number: 14170 and 14174

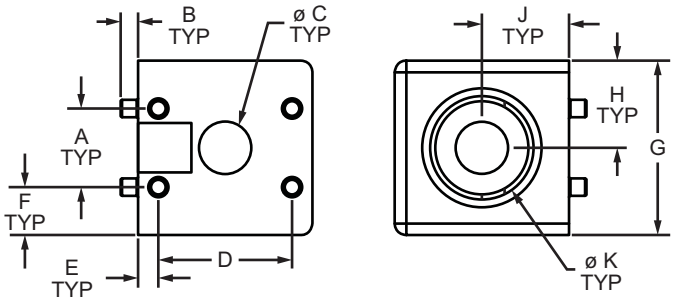

Part Number: 14154, 14176, 14172

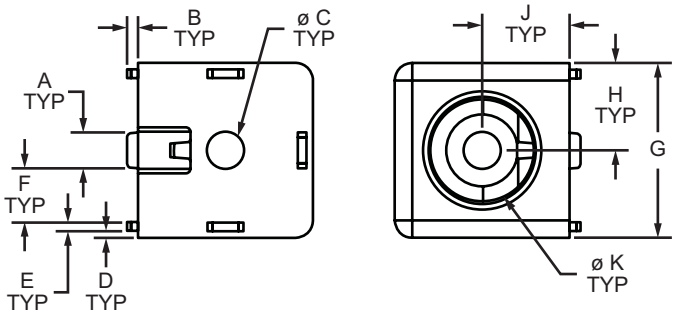

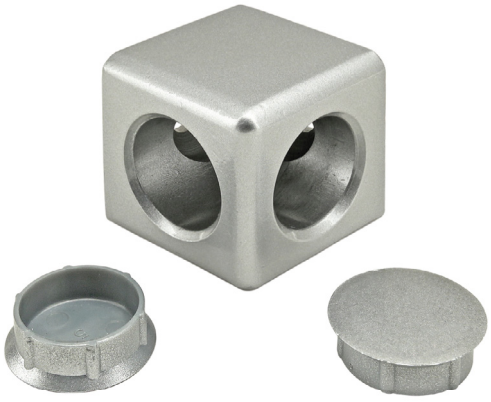

Part No.	Series	Material	Finish	A	B	C	D	E	F	G	H	J	K	Weight
14154	10 25	Aluminum	Lacquered	.244"	.098"	.283"	.039"	.079"	.256"	.992"	.496"	.496"	.470"	.110 lb
14176	15			.315"	.118"	.335"	.059"	.098"	.441"	1.500"	.750"	.750"	.705"	.225 lb
14170	30			13.50mm	3.00mm	9.00mm	22.20mm	3.50mm	8.25mm	30.00mm	15.00mm	15.00mm	17.80mm	.0513 kg
14172	40			8.20mm	2.50mm	8.50mm	1.50mm	2.00mm	12.40mm	40.00mm	20.00mm	20.00mm	24.00mm	.1194 kg
14174	45			16.00mm	4.00mm	13.00mm	29.00mm	8.00mm	14.50mm	45.00mm	22.50mm	22.50mm	23.70mm	.1821 kg

Required Machining Services

Machining Type	Machined	Reference Page
Tap Profile End	Mounting Profiles	861

Suggested Hardware (Mount to Profile End)

Part No.	Series	Qty.	Bolt
3063	10	2	1/4-20 x 5/8" BHSCS
3118	15	2	5/16-18 x 1" BHSCS
11-6316	25	2	M6 x 16mm BHSCS
11-8720	30 40	2	M8 x 20mm FHSCS
13003	45	2	M12 x 30mm BHSCS

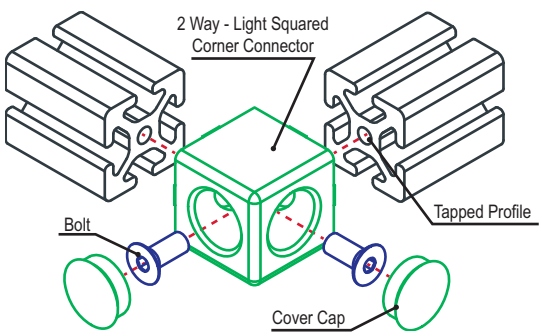

Part Description:

The 3 way - light squared corner connector is a die-cast external fastening method that is typically used to create a squared corner connection between three profiles. The fastener is lightweight and has three access holes; it includes the cover caps for the holes, to provide a finished look. The 3 way - light squared corner connector requires an end tap machining service (see page 861) on the mating profiles.

Part Number: 14135, 14177, 14171, 14175

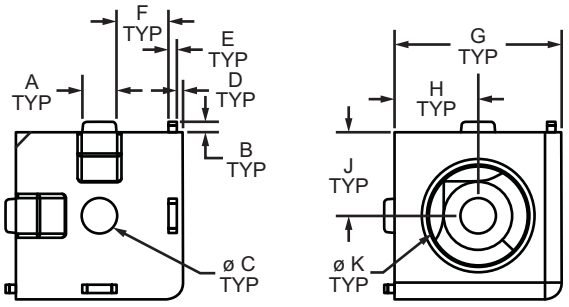

Part Number: 14173

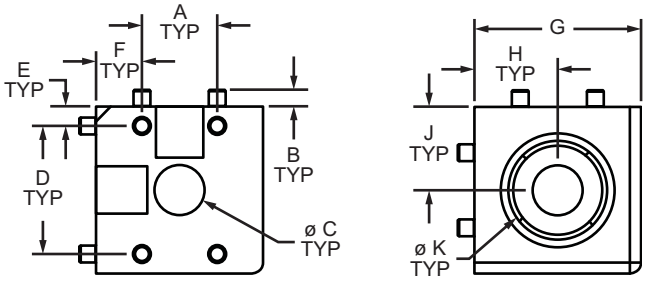

Part No.	Series	Material	Finish	A	B	C	D	E	F	G	H	J	K	Weight
14135	10 25	Aluminum	Lacquered	.244"	.098"	.283"	.039"	.079"	.256"	.992"	.496"	.496"	.470"	.090 lb
14177	15			.315"	.118"	.335"	.059"	.098"	.439"	1.500"	.750"	.750"	.705"	.191 lb
14171	30			13.50mm	3.00mm	9.00mm	23.00mm	3.50mm	8.25mm	30.00mm	15.00mm	15.00mm	17.80mm	.0418 kg
14173	40			8.50mm	2.00mm	8.50mm	1.50mm	2.00mm	12.25mm	40.00mm	20.00mm	20.00mm	23.70mm	.1022 kg
14175	45			16.00mm	4.00mm	13.00mm	29.00mm	8.00mm	14.50mm	45.00mm	22.50mm	22.50mm	23.70mm	.1591 kg

Required Machining Services

Machining Type	Machined	Reference Page
Tap Profile End	Mounting Profiles	861

Suggested Hardware (Mount to Profile End)

Part No.	Series	Qty.	Bolt
3063	10	3	1/4-20 x 5/8" BHSCS
3118	15	3	5/16-18 x 1" BHSCS
11-6316	25	3	M6 x 16mm BHSCS
11-8720	30 40	3	M8 x 20mm FHSCS
13003	45	3	M12 x 30mm BHSCS

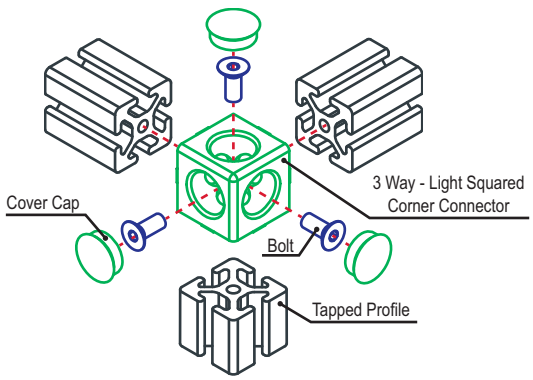

3 Way - Rounded Corner Connector

Part Description:

The 3 way - rounded corner connector is an external fastening method that is typically used to create a curved corner connection between quarter round profiles. It is a heavy-duty connection that is simple to use and provides a finished appearance while the rounded corner prevents sharp edges. The 3 way - rounded corner connector requires an end tap machining service (see page 861) on the mating profiles.

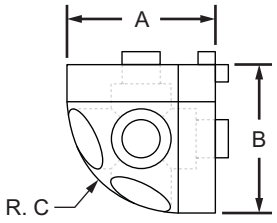

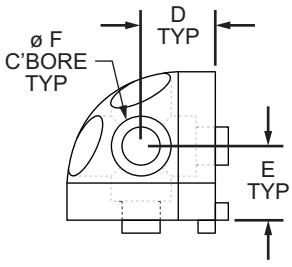

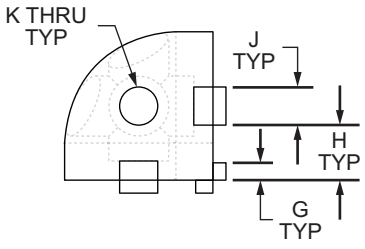

Part No.	Series	Material	Alloy*	Finish	A	B	C	D	E	F	G	H	J	K	Weight
4041	10	Aluminum	6105-T5	Clear Anodize	1.000"	1.000"	.750"	.500"	.500"	.406"	.117"	.378"	.244"	.257"	.049 lb
4041-Black	10			Black Anodize	1.000"	1.000"	.750"	.500"	.500"	.406"	.117"	.378"	.244"	.257"	.049 lb
4441	15			Clear Anodize	1.500"	1.500"	1.125"	.750"	.750"	.515"	.200"	.595"	.310"	.328"	.213 lb
4441-Black	15			Black Anodize	1.500"	1.500"	1.125"	.750"	.750"	.515"	.200"	.595"	.310"	.328"	.213 lb
40-4443	40			Clear Anodize	40.00mm	40.00mm	30.00mm	20.00mm	20.00mm	13.50mm	5.10mm	16.13mm	7.75mm	8.30mm	.1025 kg
40-4443-Black	40			Black Anodize	40.00mm	40.00mm	30.00mm	20.00mm	20.00mm	13.50mm	5.10mm	16.13mm	7.75mm	8.30mm	.1025 kg

* Or comparable

Required Machining Services

Machining Type	Machined	Reference Page
Tap Profile End	Mounting Profiles	861

Suggested Hardware (Mount to Profile End)

Part No.	Series	Qty.	Bolt
3017	10	3	1/4-20 x 1" Low Head Socket Cap Screw
3018	15	3	5/16-18 x 1.25" Low Head Socket Cap Screw
11-8525	40	3	M8 x 25mm SHCS

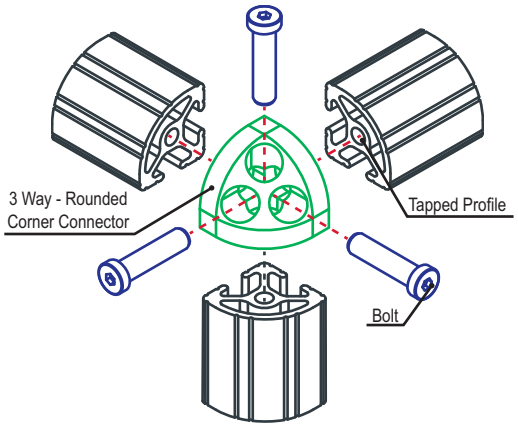

Part Description:

The 3 way - triangular corner connector is an external fastening method that is typically used to create a corner connection between three angled profiles. It is a heavy-duty connection that is simple to use and provides a finished appearance. The 3 way - triangular corner connector requires an end tap machining service (see page 861) on the mating profiles. The suggested hardware can be found below.

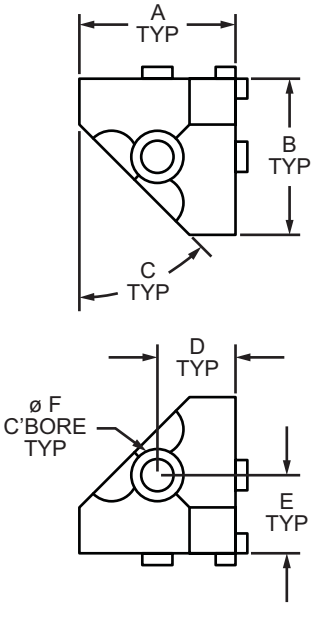

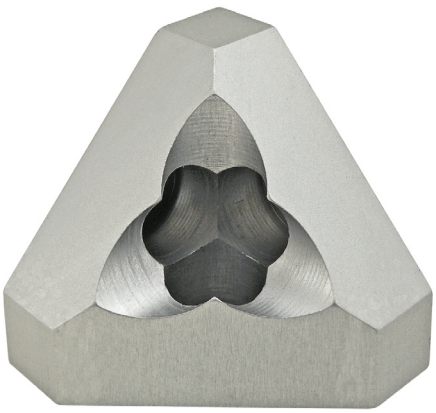

Part No.	Series	Material	Alloy*	Finish	A	B	C	D	E	F	G	H	J	K	Weight
40-4441	40	Aluminum	6105-T5	Clear Anodize	40.00mm	40.00mm	45°	20.00mm	20.00mm	13.50mm	5.10mm	16.13mm	7.75mm	8.30mm	.0677 kg
40-4441-Black	40			Black Anodize	40.00mm	40.00mm	45°	20.00mm	20.00mm	13.50mm	5.10mm	16.13mm	7.75mm	8.30mm	.0677 kg

* Or comparable

Required Machining Services

Machining Type	Machined	Reference Page
Tap Profile End	Mounting Profiles	861

Suggested Hardware (Mount to Profile End)

Part No.	Series	Qty.	Bolt
11-8525	40	3	M8 x 25mm SHCS

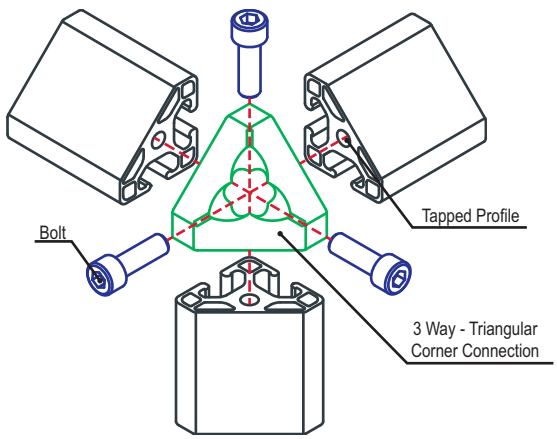

Standard Angle Clamp Block

Part Description:

The standard angle clamp block is typically mounted to the T-slot. The tab grips into the mating profile to help align and hold the clamp, enabling adjustments and a range of various angles. The standard angle clamp block is sold in pairs and requires no machining services. The suggested mounting hardware is included.

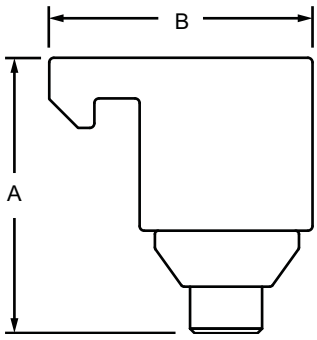

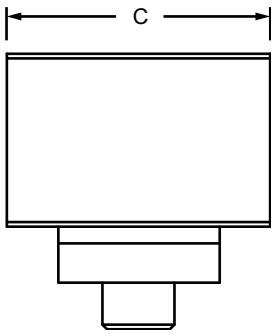

Part No.	Series	Material	Alloy*	Finish	A	B	C	Weight
4174	10	Aluminum	6105-T5	Clear Anodize	.690"	.710"	.710"	.063 lb
4174-Black	10			Black Anodize	.690"	.710"	.710"	.063 lb
4468	15			Clear Anodize	1.195"	1.142"	1.142"	.218 lb
4468-Black	15			Black Anodize	1.195"	1.142"	1.142"	.218 lb

* Or comparable

Included Hardware (Mount to T-Slot)

Part No.	Series	Qty.	Description
3048	10	2	10-32 x 1/2" SHCS
3276	10	2	Slide-in Economy T-Nut
3119	15	2	5/16-18 x 7/8" SHCS
3203	15	2	Standard Slide-in T-Nut

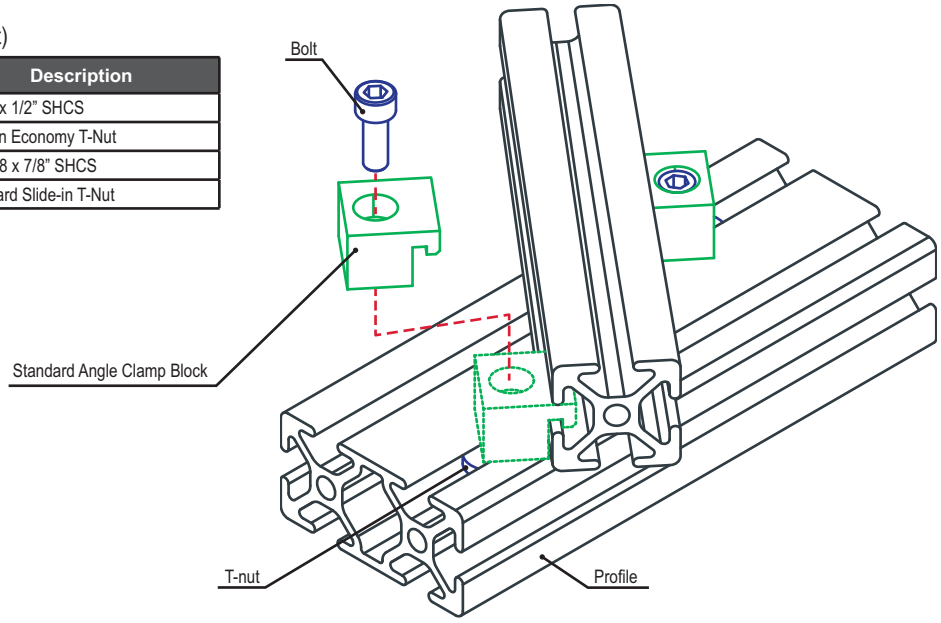

Part Description:

The economy angle clamp block is commonly used to connect profiles at variable angles and provide a large degree of adjustability. The tab grips into the mating profile to help align and hold the clamp. The economy angle clamp block requires no machining services.

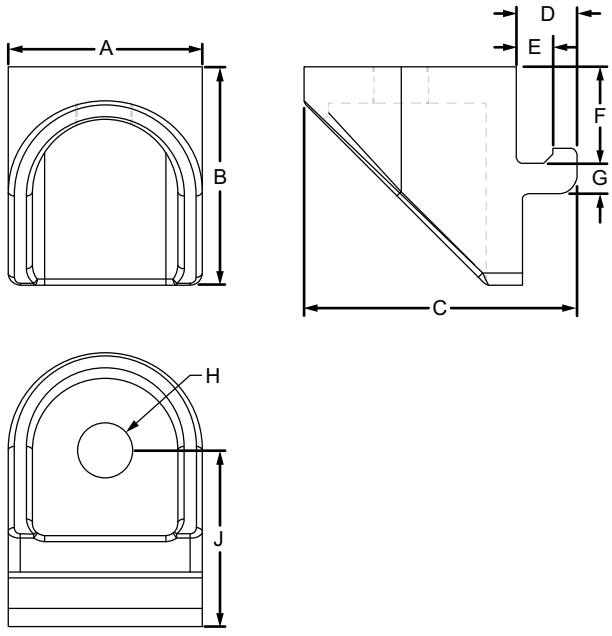

Part No.	Series	A	B	C	D	E	F	G	H	J	Weight
14117	40	32.00mm	36.00mm	45.00mm	10.00mm	6.00mm	15.90mm	5.00mm	9.00mm	26.00mm	.1026 kg

Material Specifications

Material	Process	Finish
Zinc	Die Cast	Powder Coat

Suggested Hardware (Mount to T-Slot)

Part No.	Series	Qty.	Bolt	T-Nut
75-3625	40	1	M8 x 16mm SHCS	Slide-In

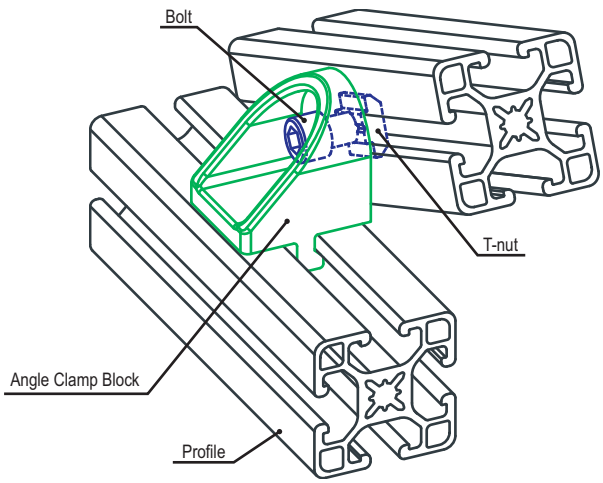

2 Hole - Pivot Joint

Part Description:

The 2 hole - pivot joint is an external fastening method that is lightweight yet sturdy. It is easy to use and is compatible with most metric profiles. This connector can either mount to the end of a profile, which would require an end tap (see page 861), or the slot tabs can be removed for mounting directly to the T-slot without any required machining services. The screws on the arms can be adjusted for movement or fixed in one position. The suggested hardware for the 2 hole - pivot joint can be found on page 339.

Part Number: 14011, 14016, 14017

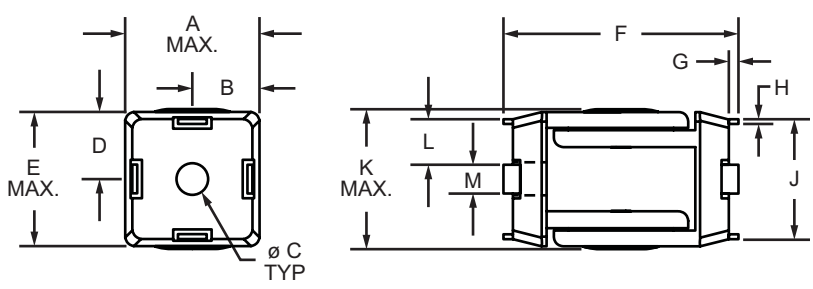

Part Number: 14014

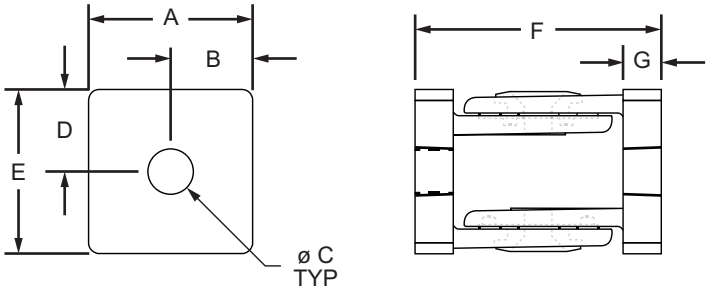

Part Number: 14018 and 14019

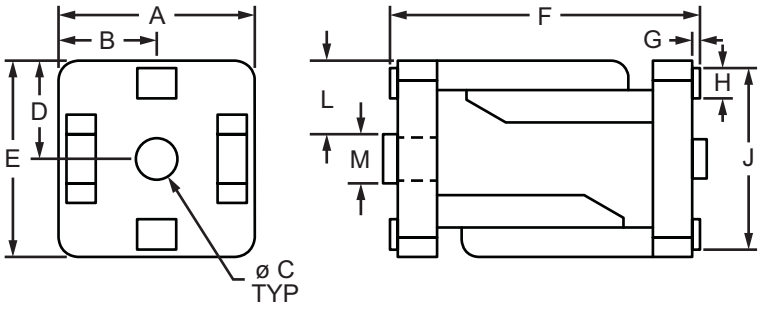

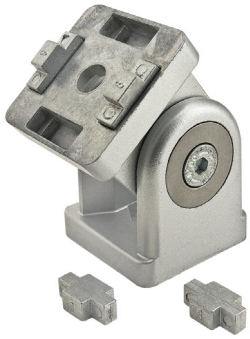

CONTINUE

Part No.	Series	A	B	C	D	E	F	G	H	J	K	L	M	Weight
14011*	10 25	28.00mm	14.00mm	6.60mm	14.00mm	28.00mm	49.00mm	2.00mm	1.00mm	25.00mm	29.20mm	9.50mm	6.00mm	.1225 kg
14017*	15	1.570"	.790"	.340"	.790"	1.570"	2.520"	.079"	.039"	1.378"	1.575"	.531"	.315"	.641 lb
14014**	30	30.00mm	15.00mm	8.30mm	15.00mm	30.00mm	45.00mm	7.00mm	—	—	—	—	—	.1412 kg
14016*	30	30.00mm	15.00mm	8.30mm	15.00mm	30.00mm	50.00mm	2.50mm	1.00mm	29.00mm	30.00mm	10.50mm	8.30mm	.1375 kg
14018***	40	40.00mm	20.00mm	8.50mm	20.00mm	40.00mm	63.20mm	1.60mm	6.20mm	37.00mm	—	15.00mm/ 16.00mm	8.00mm/ 10.00mm	.2699 kg
14019***	45	45.00mm	22.50mm	8.50mm	22.50mm	45.00mm	63.60mm	1.80mm	6.20mm	42.00mm	—	16.00mm/ 17.00mm	8.00mm/ 10.00mm	.3268 kg

* Break off tabs
** No slot tabs available
*** Insert tabs available in M8 and M10

Material Specifications

Material	Process	Finish
Zinc	Die Cast	Powder Coat

2-Hole Pivot Joint Machining Services

Machining Type	Profile Machined	Reference Page
End Tap	Mounting Profile	861

Suggested Hardware (Mount to T-Slot)

Part No.	Series	Qty.	Bolt	T-Nut
3491	10	2	1/4-20 x 1/2" SHCS	Economy
3456	15	2	5/16-18 x 5/8" SHCS	Drop-In
75-3592	25	2	M6 x 14mm SHCS	Slide-In
75-3595	30	2	M6 x 16mm SHCS	Drop-In
75-3625	40	2	M8 x 16mm SHCS	Slide-In
75-3623	45	2	M8 x 16mm SHCS	Drop-In

Suggested Hardware (Mount to Profile End)

Part No.	Series	Qty.	Bolt
3064	10	2	1/4-20 x 3/4" SHCS
3122	15	2	5/16-18 x 1" SHCS
11-6518	25	2	M6 x 18mm SHCS
11-8525*	30 40 45	2	M8 x 25mm SHCS
14196*	45	2	Threaded Insert

* 45 series requires two SHCS and two threaded inserts

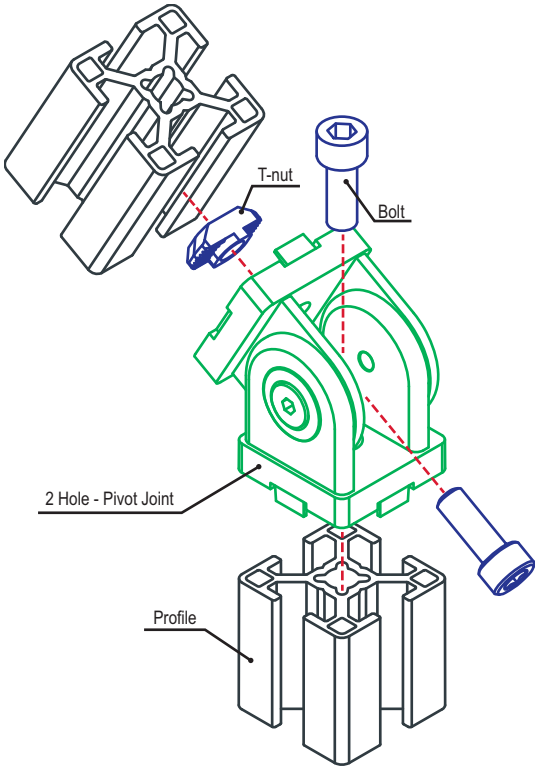

3 Hole - Triangular Pivot Plate

Part Description:

The 3 hole - triangular pivot plate is an external connection method that can be used either with a nub or mounted directly to the T-slot. It is typically used to create a structured angle connection between profiles. This fastening option provides a long-lasting connection and requires no machining services. It can be easily assembled, lending itself to repositioning and reuse. **Tip:** Use double slide-in economy T-nuts (pg. 366) to save time and money. Pre-load your hardware prior to connecting profiles to simplify your assembly and save time.

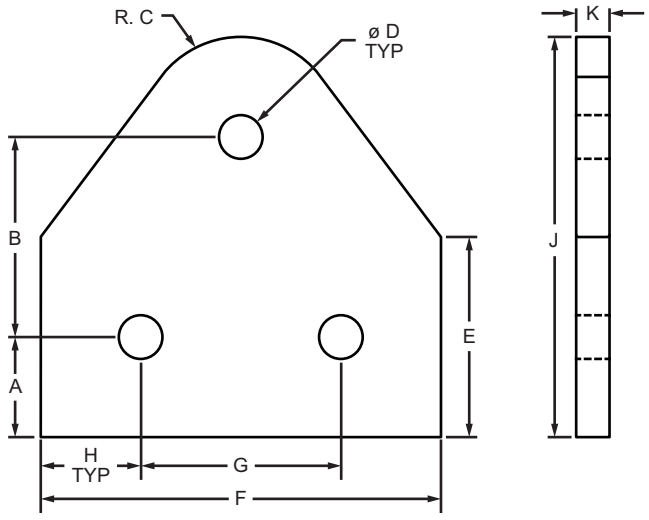

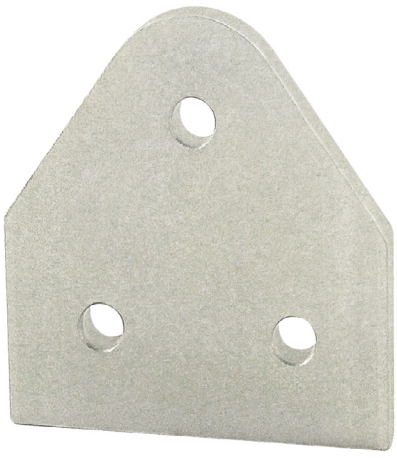

Part No.	Series	Color	A	B	C	D	E	F	G	H	J	K	Weight
4372	15	Clear	.750"	1.500"	.750"	.328"	1.500"	3.000"	1.500"	.750"	3.000"	.250"	.168 lb
4372-Black	15	Black	.750"	1.500"	.750"	.328"	1.500"	3.000"	1.500"	.750"	3.000"	.250"	.168 lb
40-4372	40	Clear	20.00mm	40.00mm	20.00mm	8.30mm	40.00mm	80.00mm	40.00mm	20.00mm	80.00mm	6.00mm	.0811 kg
40-4372-Black	40	Black	20.00mm	40.00mm	20.00mm	8.30mm	40.00mm	80.00mm	40.00mm	20.00mm	80.00mm	6.00mm	.0811 kg

Material Specifications

Material	Alloy*	Process	Finish
Aluminum	6105-T5	Milled	Anodize

* Or comparable

Suggested Hardware (Mount to T-slot)

Part No.	Series	Qty.	Bolt	T-Nut
3320	15	3	5/16-18 x 11/16" FBHSCS	Economy
75-3422	40	3	M8 x 16mm BHSCS	Economy

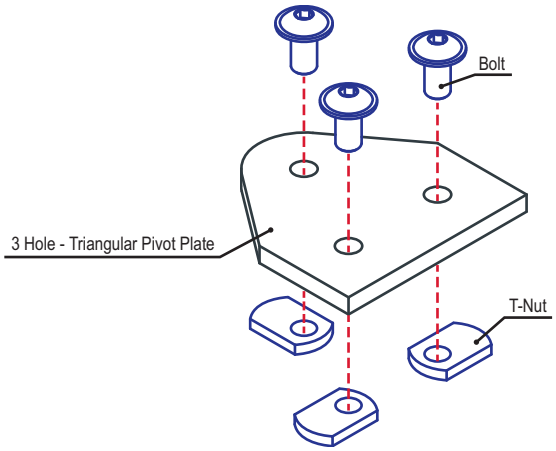

Part Description:

The 3 hole - recessed straight pivot plate is an external connection method that is intended to be used in pairs to create a custom angle between profiles. The recess replaces the need for a nub in a pivot assembly. This fastening option provides a long-lasting connection and requires no machining services. It can be easily assembled, lending itself to repositioning and reuse. **Tip:** Use double slide-in economy T-nuts (pg. 366) to save time and money. Pre-load your hardware prior to connecting profiles to simplify your assembly and save time.

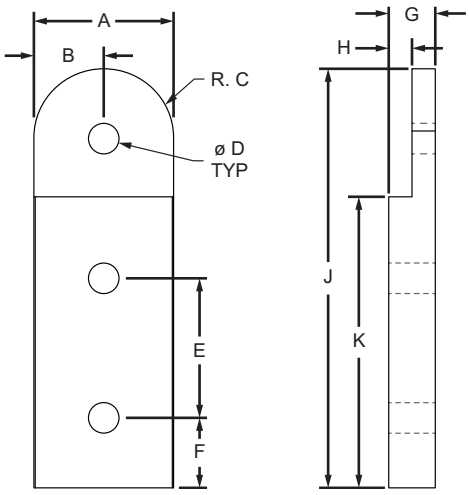

Part No.	Series	Color	A	B	C	D	E	F	G	H	J	K	Weight
4390	15	Clear	1.500"	.750"	.755"	.328"	1.500"	.750"	.500"	.250"	4.500"	3.000"	.255 lb
4390-Black	15	Black	1.500"	.750"	.755"	.328"	1.500"	.750"	.500"	.250"	4.500"	3.000"	.255 lb
40-4390	40	Clear	40.00mm	20.00mm	20.00mm	8.30mm	40.00mm	20.00mm	12.00mm	6.00mm	120.00mm	80.00mm	.0550 kg
40-4390-Black	40	Black	40.00mm	20.00mm	20.00mm	8.30mm	40.00mm	20.00mm	12.00mm	6.00mm	120.00mm	80.00mm	.0550 kg

Material Specifications

Material	Alloy*	Process	Finish
Aluminum	6105-T5	Milled	Anodize

* Or comparable

Suggested Hardware (Mount to T-Slot)

Part No.	Series	Qty.	Bolt	T-Nut	Washer
3443	15	2	5/16-18 x 1" BHSCS	Economy	Yes
75-3427	40	2	M8 x 25mm BHSCS	Economy	Yes

Suggested Hardware (Mount to Pivot Plate)

Part No.	Series	Qty.	Description
3446	15	1	5/16-18 x 7/8" SHCS, Washer & Hex Nut
75-3434	40	1	M8 x 25mm SHCS, Washer & Hex Nut

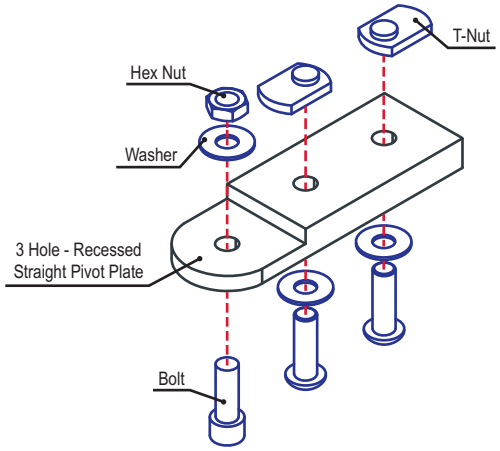

3 Hole - Recessed Triangular Pivot Plate

Part Description:

The 3 hole - recessed triangular pivot plate is an external connection method that is intended to be used in pairs to create a custom angle between profiles. The recess replaces the need for a nub in a pivot assembly. It is typically used to create a structured angled connection between profiles. This fastening option provides a long-lasting connection and requires no machining services. It can be easily assembled, lending itself to repositioning and reuse. **Tip:** Use double slide-in economy T-nuts (pg. 366) to save time and money. Pre-load your hardware prior to connecting profiles to simplify your assembly and save time.

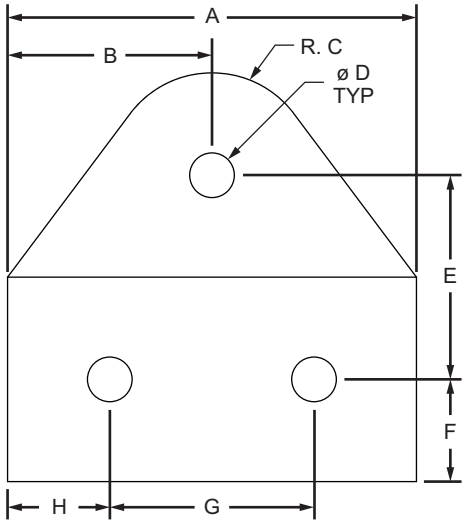

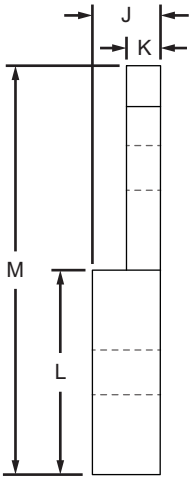

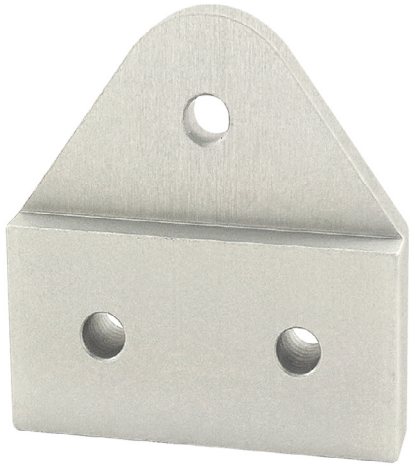

Part No.	Series	Color	A	B	C	D	E	F	G	H	J	K	L	M	Weight
4392	15	Clear	3.000"	1.500"	.750"	.328"	1.500"	.750"	1.500"	.750"	.500"	.250"	1.500"	3.000"	.272 lb
4392-Black	15	Black	3.000"	1.500"	.750"	.328"	1.500"	.750"	1.500"	.750"	.500"	.250"	1.500"	3.000"	.272 lb

Material Specifications

Material	Alloy*	Process	Finish
Aluminum	6105-T5	Milled	Anodize

* Or comparable

Suggested Hardware (Mount to T-Slot)

Part No.	Series	Qty.	Bolt	T-Nut	Washer
3443	15	2	5/16-18 x 1" BHSCS	Economy	Yes

Suggested Hardware (Mount to Pivot Plate)

Part No.	Series	Qty.	Description
3446	15	1	5/16-18 x 7/8" SHCS, Washer & Hex Nut

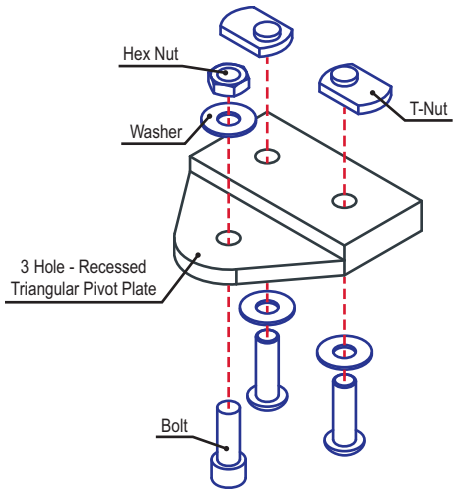

Part Description:

The 5 hole - triangular pivot plate is a strong external connection method that is typically used with a nub to create a structured angle connection between profiles. This fastening option provides a long-lasting connection and requires no machining services. It can be easily assembled, lending itself to repositioning and reuse. **Tip:** Use double slide-in economy T-nuts (pg. 366) to save time and money. Pre-load your hardware prior to connecting profiles to simplify your assembly and save time.

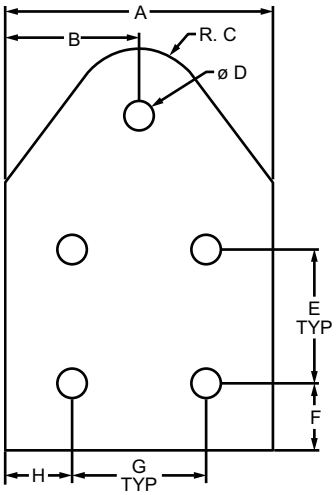

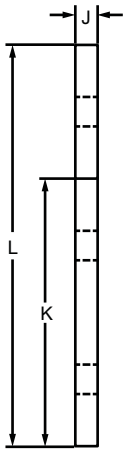

Part No.	Series	Color	A	B	C	D	E	F	G	H	J	K	L	Weight
4371	15	Clear	3.000"	1.500"	.750"	.328"	1.500"	.750"	1.500"	.750"	.250"	3.000"	4.500"	.267 lb
4371-Black	15	Black	3.000"	1.500"	.750"	.328"	1.500"	.750"	1.500"	.750"	.250"	3.000"	4.500"	.267 lb

Material Specifications

Material	Alloy*	Process	Finish
Aluminum	6105-T5	Milled	Anodize

* Or comparable

Suggested Hardware (Mount to T-Slot)

Part No.	Series	Qty.	Bolt	T-Nut
3320	15	4	5/16-18 x 11/16" FBHSCS	Economy

Suggested Hardware (Mount to Pivot Nub)

Part No.	Series	Qty.	Bolt
3330	15	1	5/16-18 x 11/16" FBHSCS

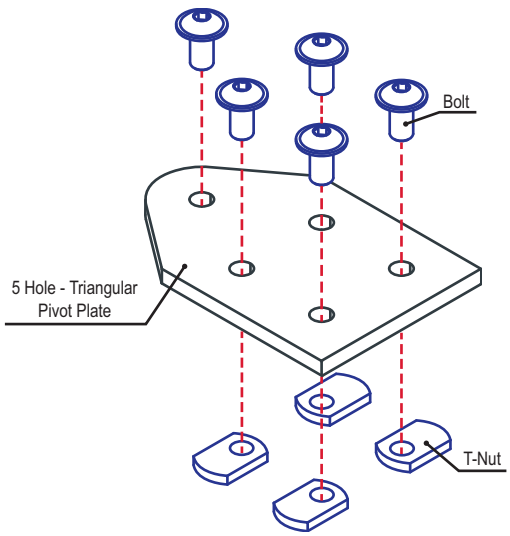

5 Hole - Recessed Triangular Pivot Plate

Part Description:

The 5 hole - recessed triangular pivot plate is an external connection method that is intended to be used in pairs to create a custom angle between profiles. The recess replaces the need for a nub in a pivot assembly. This fastening option provides a long-lasting connection and requires no machining services. It can be easily assembled, lending itself to repositioning and reuse. **Tip:** Use double slide-in economy T-nuts (pg. 366) to save time and money. Pre-load your hardware prior to connecting profiles to simplify your assembly and save time.

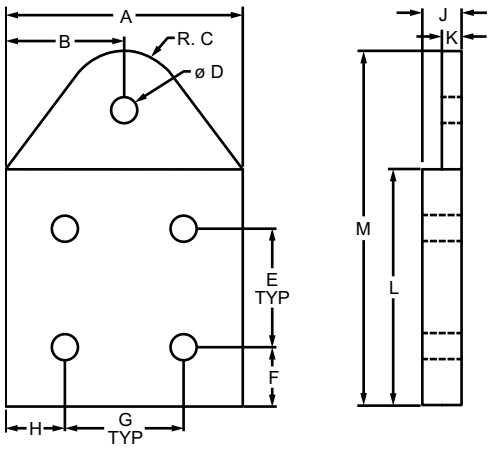

Part No.	Series	Color	A	B	C	D	E	F	G	H	J	K	L	M	Weight
4394	15	Clear	3.000"	1.500"	.750"	.328"	1.500"	.750"	1.500"	.750"	.500"	.250"	3.000"	4.500"	.485 lb
4394-Black	15	Black	3.000"	1.500"	.750"	.328"	1.500"	.750"	1.500"	.750"	.500"	.250"	3.000"	4.500"	.485 lb
40-4394	40	Clear	80.00mm	40.00mm	20.00mm	8.30mm	40.00mm	20.00mm	40.00mm	20.00mm	12.00mm	6.00mm	80.00mm	120.00mm	.2287 kg
40-4394-Black	40	Black	80.00mm	40.00mm	20.00mm	8.30mm	40.00mm	20.00mm	40.00mm	20.00mm	12.00mm	6.00mm	80.00mm	120.00mm	.2287 kg

Material Specifications

Material	Alloy*	Process	Finish
Aluminum	6105-T5	Milled	Anodize

* Or comparable

Suggested Hardware (Mount to T-Slot)

Part No.	Series	Qty.	Bolt	T-Nut	Washer
3443	15	4	5/16-18 x 1" BHSCS	Economy	Yes
75-3427	40	4	M8 x 25mm BHSCS	Economy	Yes

Suggested Hardware (Mount to Pivot Plate)

Part No.	Series	Qty.	Description
3446	15	1	5/16-18 x 7/8" SHCS, Washer & Hex Nut
75-3434	40	1	M8 x 25mm SHCS, Washer & Hex Nut

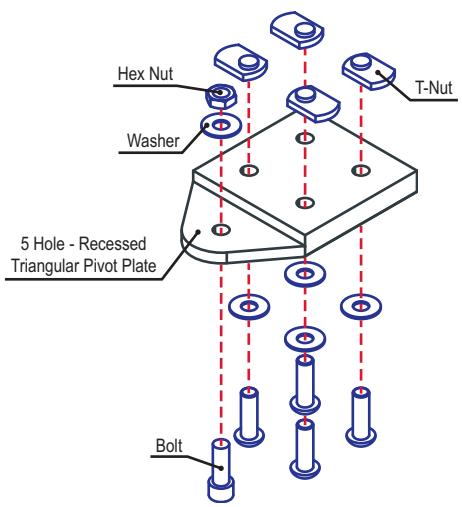

Part Description:

The 0 degree structural pivot nub is an external fastening method commonly used as a connection hub to create a structural pivot ranging from 0-180 degrees parallel to the mounting profile. It has a slot tab that helps prevent the nub from rotating as well as assists with alignment in the T-slot. The 0 degree structural pivot nub requires no machining services and can be easily assembled, lending itself to repositioning and reuse.

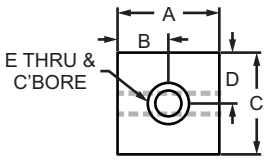

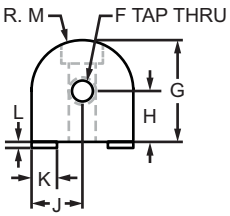

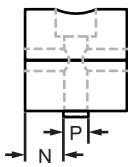

Part No.	Series	Color	A	B	C	D	E	F	G	H	J	K	L	M	N	P	Weight
4187	10	Clear	1.000"	.500"	1.000"	.500"	1/4-20	1/4-20	1.000"	.500"	.500"	.250"	.060"	.500"	.377"	.245"	.102 lb
4187-Black	10	Black	1.000"	.500"	1.000"	.500"	1/4-20	1/4-20	1.000"	.500"	.500"	.250"	.060"	.500"	.377"	.245"	.102 lb
4387	15	Clear	1.500"	.750"	1.500"	.750"	5/16-18	5/16-18	1.500"	.750"	.750"	.312"	.100"	.750"	.594"	.312"	.312 lb
4387-Black	15	Black	1.500"	.750"	1.500"	.750"	5/16-18	5/16-18	1.500"	.750"	.750"	.312"	.100"	.750"	.594"	.312"	.312 lb
25-4187	25	Clear	25.00mm	12.50mm	25.00mm	12.50mm	M6 x 1.0	M6 x 1.0	25.00mm	12.50mm	12.50mm	6.15mm	1.10mm	12.50mm	9.35mm	6.30mm	.0405 kg
25-4187-Black	25	Black	25.00mm	12.50mm	25.00mm	12.50mm	M6 x 1.0	M6 x 1.0	25.00mm	12.50mm	12.50mm	6.15mm	1.10mm	12.50mm	9.35mm	6.30mm	.0405 kg
40-4387	40	Clear	40.00mm	20.00mm	40.00mm	20.00mm	M8 x 1.25	M8 x 1.25	40.00mm	20.00mm	20.00mm	7.92mm	2.13mm	20.00mm	16.03mm	7.92mm	.1549 kg
40-4387-Black	40	Black	40.00mm	20.00mm	40.00mm	20.00mm	M8 x 1.25	M8 x 1.25	40.00mm	20.00mm	20.00mm	7.92mm	2.13mm	20.00mm	16.03mm	7.92mm	.1549 kg

Material Specifications

Material	Alloy*	Process	Finish
Aluminum	6105-T5	Milled	Anodize

* Or comparable

Included Hardware (Mount Nub to T-Slot)

Part No.	Series	Qty.	Bolt	T-Nut
3306	10	1	1/4-20 x 1" SHCS	Economy
3613	15	1	5/16-18 x 1.5" SHCS	Economy
75-3415	25	1	M6 x 25mm SHCS	Economy
75-3479	40	1	M8 x 40mm SHCS	Economy

Suggested Hardware (Mount Arm to Nub)

Part No.	Series	Qty.	Bolt
3342	10	2	1/4-20 x 1/2" FBHSCS
3330	15	2	5/16-18 x 11/16" FBHSCS
13-6312	25	2	M6 x 12mm BHSCS
13-8316	40	2	M8 x 16mm BHSCS

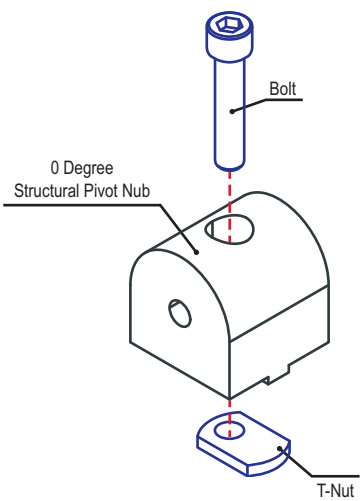

90 Degree Structural Pivot Nub

Part Description:

The 90 degree structural pivot nub is an external fastening method commonly used as a connection hub to create a structural pivot ranging from 0-180 degrees perpendicular to the mounting profile. It has a slot tab that helps prevent the nub from rotating as well as assists with alignment in the T-slot. The 90 degree structural pivot nub requires no machining services and can be easily assembled, lending itself to repositioning and reuse.

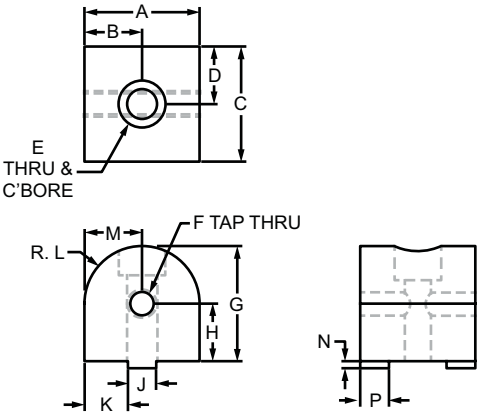

Part No.	Series	Color	A	B	C	D	E	F	G	H	J	K	L	M	N	P	Weight
4188	10	Clear	1.000"	.500"	1.000"	.500"	1/4-20	1/4-20	1.000"	.500"	.245"	.377"	.500"	.500"	.060"	.250"	.102 lb
4188-Black	10	Black	1.000"	.500"	1.000"	.500"	1/4-20	1/4-20	1.000"	.500"	.245"	.377"	.500"	.500"	.060"	.250"	.102 lb
4388	15	Clear	1.500"	.750"	1.500"	.750"	5/16-18	5/16-18	1.500"	.750"	.312"	.594"	.750"	.750"	.100"	.312"	.324 lb
4388-Black	15	Black	1.500"	.750"	1.500"	.750"	5/16-18	5/16-18	1.500"	.750"	.312"	.594"	.750"	.750"	.100"	.312"	.324 lb
25-4188	25	Clear	25.00mm	12.50mm	25.00mm	12.50mm	M6 x 1.0	M6 x 1.0	25.00mm	12.50mm	6.30mm	9.35mm	12.50mm	12.50mm	1.10mm	6.15mm	.0402 kg
25-4188-Black	25	Black	25.00mm	12.50mm	25.00mm	12.50mm	M6 x 1.0	M6 x 1.0	25.00mm	12.50mm	6.30mm	9.35mm	12.50mm	12.50mm	1.10mm	6.15mm	.0402 kg
40-4388	40	Clear	40.00mm	20.00mm	40.00mm	20.00mm	M8 x 1.25	M8 x 1.25	40.00mm	20.00mm	7.92mm	16.03mm	20.00mm	20.00mm	2.13mm	7.92mm	.1545 kg
40-4388-Black	40	Black	40.00mm	20.00mm	40.00mm	20.00mm	M8 x 1.25	M8 x 1.25	40.00mm	20.00mm	7.92mm	16.03mm	20.00mm	20.00mm	2.13mm	7.92mm	.1545 kg

Material Specifications

Material	Alloy*	Process	Finish
Aluminum	6105-T5	Milled	Anodize

* Or comparable

Included Hardware (Mount Nub to T-Slot)

Part No.	Series	Qty.	Bolt	T-Nut
3306	10	1	1/4-20 x 1" SHCS	Economy
3613	15	1	5/16-18 x 1.5" SHCS	Economy
75-3415	25	1	M6 x 25mm SHCS	Economy
75-3479	40	1	M8 x 40mm SHCS	Economy

Suggested Hardware (Mount Arm to Nub)

Part No.	Series	Qty.	Bolt
3342	10	2	1/4-20 x 1/2" FBHSCS
3330	15	2	5/16-18 x 11/16" FBHSCS
13-6312	25	2	M6 x 12mm BHSCS
13-8316	40	2	M8 x 16mm BHSCS

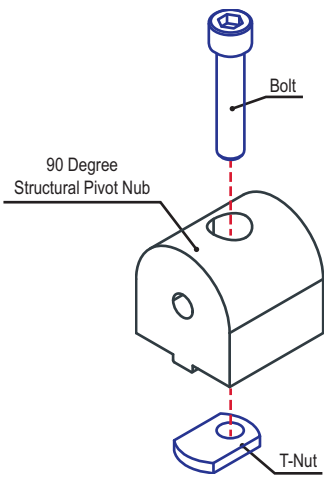

Part Description:

The universal structural pivot nub is an external fastening method commonly used as a connection hub to create a structural pivot ranging from 0-180 degrees either parallel or perpendicular to the mounting profile. The universal structural pivot nub requires no machining services and can be easily assembled, lending itself to repositioning and reuse.

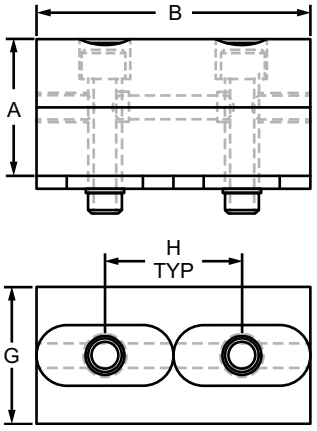

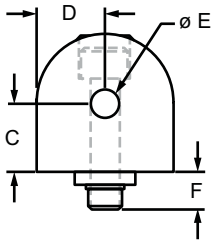

Part No.	Series	Color	A	B	C	D	E	F	G	H	Weight
4186	10	Clear	1.000"	2.000"	.500"	.500"	1/4-20	.260"	1.000"	1.000"	.202 lb
4186-Black	10	Black	1.000"	2.000"	.500"	.500"	1/4-20	.260"	1.000"	1.000"	.202 lb
4386	15	Clear	1.500"	3.000"	.750"	.750"	5/16-18	.450"	1.500"	1.500"	.648 lb
4386-Black	15	Black	1.500"	3.000"	.750"	.750"	5/16-18	.450"	1.500"	1.500	.648 lb
25-4186	25	Clear	25.00mm	50.00mm	12.50mm	12.50mm	M6 x 1.0	6.89mm	25.00mm	25.00mm	.0885 kg
25-4186-Black	25	Black	25.00mm	50.00mm	12.50mm	12.50mm	M6 x 1.0	6.89mm	25.00mm	25.00mm	.0885 kg
40-4386	40	Clear	40.00mm	80.00mm	20.00mm	20.00mm	M8 x 1.25	11.43mm	40.00mm	40.00mm	.3393 kg
40-4386-Black	40	Black	40.00mm	80.00mm	20.00mm	20.00mm	M8 x 1.25	11.43mm	40.00mm	40.00mm	.3393 kg

Material Specifications

Material	Alloy*	Process	Finish
Aluminum	6105-T5	Milled	Anodize

* Or comparable

Included Hardware (Mount Nub to T-Slot)

Part No.	Series	Qty.	Bolt	T-Nut
3306	10	2	1/4-20 x 1" SHCS	Economy
3613	15	2	5/16-18 x 1.5" SHCS	Economy
75-3415	25	2	M6 x 25mm SHCS	Economy
75-3479	40	2	M8 x 40mm SHCS	Economy

Suggested Hardware (Mount Arm to Nub)

Part No.	Series	Qty.	Bolt
3342	10	2	1/4-20 x 1/2" FBHSCS
3330	15	2	5/16-18 x 11/16" FBHSCS
13-6312	25	2	M6 x 12mm BHSCS
13-8316	40	2	M8 x 16mm BHSCS

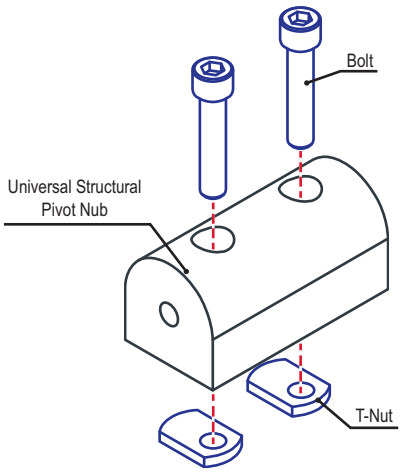

0 Degree Structural Right Angle Pivot Nub

Part Description:

The 0 degree structural right angle pivot nub is an external fastening method commonly used as a connection hub to create a structural pivot ranging from 0-90 degrees parallel to the mounting profile. It has a slot tab that helps prevent the nub from rotating as well as assists with alignment in the T-slot. The 0 degree structural right angle pivot nub requires no machining services and can be easily assembled, lending itself to repositioning and reuse.

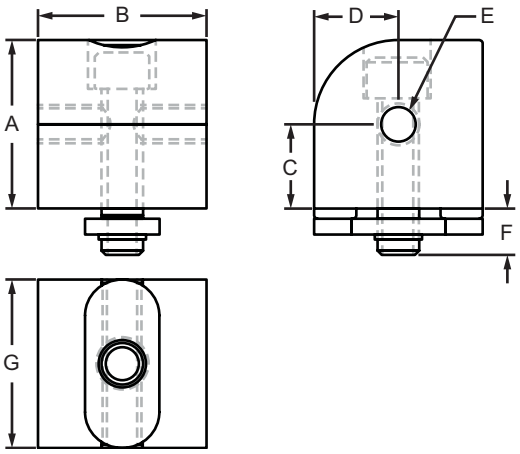

Part No.	Series	Color	A	B	C	D	E	F	G	Weight
4001	10	Clear	1.000"	1.000"	.500"	.500"	1/4-20	.275"	1.000"	.107 lb
4001-Black	10	Black	1.000"	1.000"	.500"	.500"	1/4-20	.275"	1.000"	.107 lb
4401	15	Clear	1.500"	1.500"	.750"	.750"	5/16-18	.450"	1.500"	.344 lb
4401-Black	15	Black	1.500"	1.500"	.750"	.750"	5/16-18	.450"	1.500"	.344 lb

Material Specifications

Material	Alloy*	Process	Finish
Aluminum	6105-T5	Milled	Anodize

* Or comparable

Included Hardware (Mount Nub to T-Slot)

Part No.	Series	Qty.	Bolt	T-Nut
3306	10	1	1/4-20 x 1" SHCS	Economy
3613	15	1	5/16-18 x 1.5" SHCS	Economy

Suggested Hardware (Mount Arm to Nub)

Part No.	Series	Qty.	Bolt
3342	10	2	1/4-20 x 1/2" FBHSCS
3330	15	2	5/16-18 x 11/16" FBHSCS

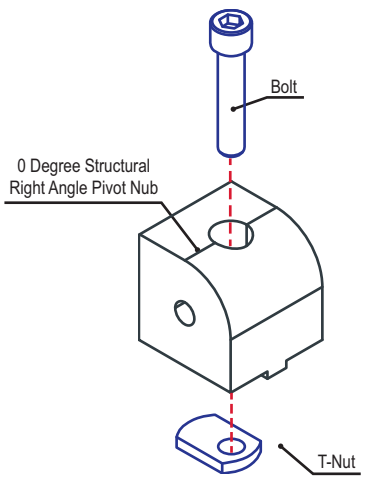

Part Description:

The 90 degree structural right angle pivot nub is an external fastening method commonly used as a connection hub to create a structural pivot ranging from 0-90 degrees perpendicular to the mounting profile. It has a slot tab that helps prevent the nub from rotating as well as assists with alignment in the T-slot. The 90 degree structural right angle pivot nub requires no machining services and can be easily assembled, lending itself to repositioning and reuse.

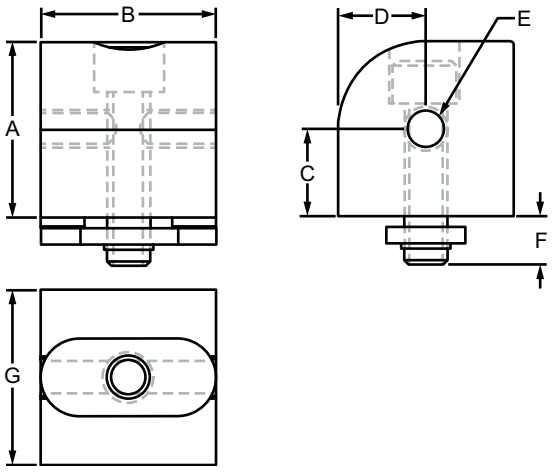

Part No.	Series	Color	A	B	C	D	E	F	G	Weight
4002	10	Clear	1.000"	1.000"	.500"	.500"	1/4-20	.275"	1.000"	.106 lb
4002-Black	10	Black	1.000"	1.000"	.500"	.500"	1/4-20	.275"	1.000"	.107 lb
4402	15	Clear	1.500"	1.500"	.750"	.750"	5/16-18	.450"	1.500"	.338 lb
4402-Black	15	Black	1.500"	1.500"	.750"	.750"	5/16-18	.450"	1.500"	.338 lb

Material Specifications

Material	Alloy*	Process	Finish
Aluminum	6105-T5	Milled	Anodize

* Or comparable

Included Hardware (Mount Nub to T-Slot)

Part No.	Series	Qty.	Bolt	T-Nut
3306	10	1	1/4-20 x 1" SHCS	Economy
3613	15	1	5/16-18 x 1.5" SHCS	Economy

Suggested Hardware (Mount Arm to Nub)

Part No.	Series	Qty.	Bolt
3342	10	2	1/4-20 x 1/2" FBHSCS
3330	15	2	5/16-18 x 11/16" FBHSCS

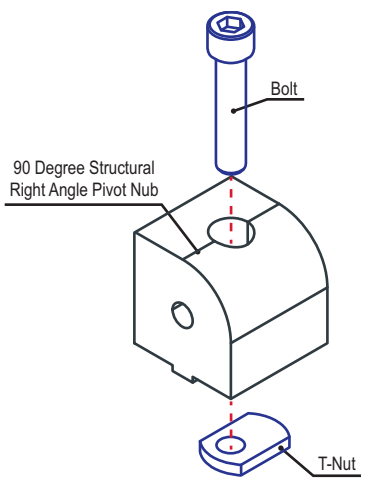

Universal Structural Right Angle Pivot Nub

Part Description:

The universal structural right angle pivot nub is an external fastening method commonly used as a connection hub to create a structural pivot ranging from 0-90 degrees either parallel or perpendicular to the mounting profile. The universal structural right angle pivot nub requires no machining services and can be easily assembled, lending itself to repositioning and reuse.

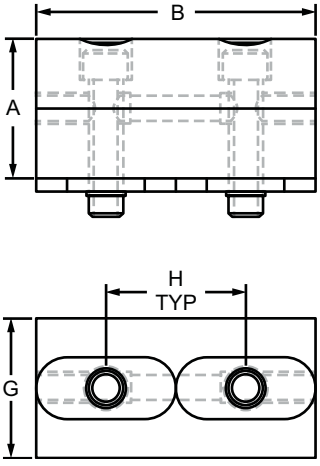

Part No.	Series	Color	A	B	C	D	E	F	G	H	Weight
4003	10	Clear	1.000"	2.000"	.500"	.500"	1/4-20	.275"	1.000"	1.000"	.214 lb
4003-Black	10	Black	1.000"	2.000"	.500"	.500"	1/4-20	.275"	1.000"	1.000"	.214 lb
4403	15	Clear	1.500"	3.000"	.750"	.750"	5/16-18	.450"	1.500"	1.500"	.685 lb
4403-Black	15	Black	1.500"	3.000"	.750"	.750"	5/16-18	.450"	1.500"	1.500"	.685 lb

Material Specifications

Material	Alloy*	Process	Finish
Aluminum	6105-T5	Milled	Anodize

* Or comparable

Included Hardware (Mount Nub to T-Slot)

Part No.	Series	Qty.	Bolt	T-Nut
3306	10	2	1/4-20 x 1" SHCS	Economy
3613	15	2	5/16-18 x 1.5" SHCS	Economy

Suggested Hardware (Mount Arm to Nub)

Part No.	Series	Qty.	Bolt
3342	10	2	1/4-20 x 1/2" FBHSCS
3330	15	2	5/16-18 x 11/16" FBHSCS

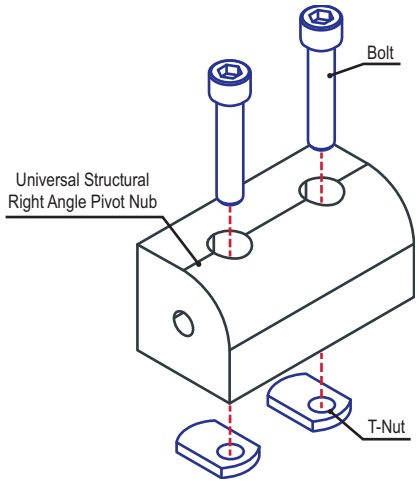

Part Description:

The "L" structural pivot arm is an external connection method that is typically used to create a structural angle on a perpendicular axis. This fastening option provides a long-lasting connection and requires no machining services. It can be easily assembled, lending itself to repositioning and reuse. **Tip:** Use double slide-in economy T-nuts (pg. 366) to save time and money. Pre-load your hardware prior to connecting profiles to simplify your assembly and save time.

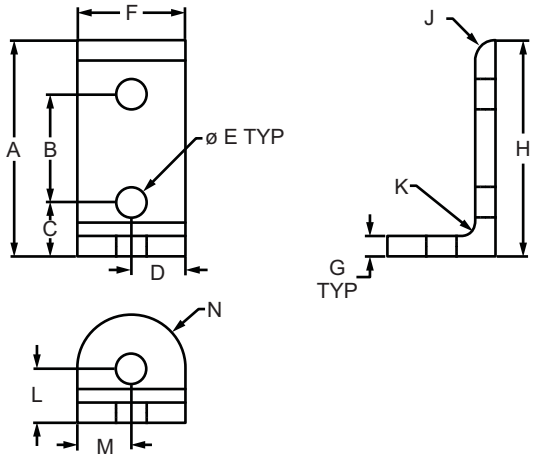

Part No.	Series	Color	A	B	C	D	E	F	G	H	J	K	L	M	N	Weight
4149	10	Clear	2.000"	1.000"	.500"	.500"	.281"	1.000"	.188"	2.000"	.188"	.125"	.500"	.500"	.505"	.044 lb
4149-Black	10	Black	2.000"	1.000"	.500"	.500"	.281"	1.000"	.188"	2.000"	.188"	.125"	.500"	.500"	.505"	.044 lb
4349	15	Clear	3.000"	1.500"	.750"	.750"	.328"	1.500"	.250"	3.000"	.250"	.312"	.750"	.750"	.755"	.142 lb
4349-Black	15	Black	3.000"	1.500"	.750"	.750"	.328"	1.500"	.250"	3.000"	.250"	.312"	.750"	.750"	.755"	.142 lb
25-4149	25	Clear	50.00mm	25.00mm	12.50mm	12.50mm	6.50mm	25.00mm	4.00mm	50.00mm	4.00mm	3.00mm	12.50mm	12.50mm	12.50mm	.0075 kg
25-4149-Black	25	Black	50.00mm	25.00mm	12.50mm	12.50mm	6.50mm	25.00mm	4.00mm	50.00mm	4.00mm	3.00mm	12.50mm	12.50mm	12.50mm	.0075 kg
40-4349	40	Clear	80.00mm	40.00mm	20.00mm	20.00mm	8.30mm	40.00mm	6.00mm	80.00mm	6.00mm	8.00mm	20.00mm	20.00mm	20.00mm	.0679 kg
40-4349-Black	40	Black	80.00mm	40.00mm	20.00mm	20.00mm	8.30mm	40.00mm	6.00mm	80.00mm	6.00mm	8.00mm	20.00mm	20.00mm	20.00mm	.0679 kg

Material Specifications

Material	Alloy*	Process	Finish
Aluminum	6105-T5	Milled	Anodize

* Or comparable

Suggested Hardware (Mount Arm to T-slot)

Part No.	Series	Qty.	Bolt	T-Nut
3393	10	3	1/4-20 x 1/2" BHSCS	Economy
3320	15	3	5/16-18 x 11/16" FBHSCS	Economy
75-3404	25	3	M6 x 10mm BHSCS	Economy
75-3422	40	3	M8 x 16mm BHSCS	Economy

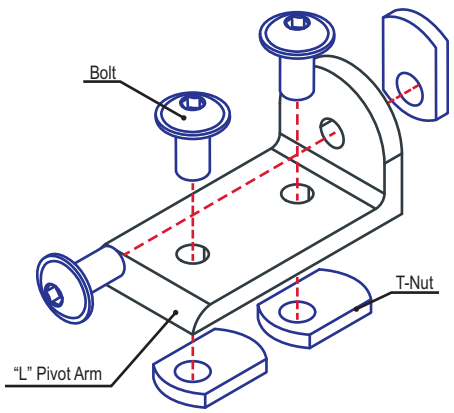

Standard Straight Structural Pivot Arm

Part Description:

The standard straight structural pivot arm is an external connection method that can be used either with a nub or mounted directly to the T-slot. It is typically used to create a structured angle connection between profiles. This fastening option provides a long-lasting connection and requires no machining services. It can be easily assembled, lending itself to repositioning and reuse. **Tip:** Use double slide-in economy T-nuts (pg. 366) to save time and money. Pre-load your hardware prior to connecting profiles to simplify your assembly and save time.

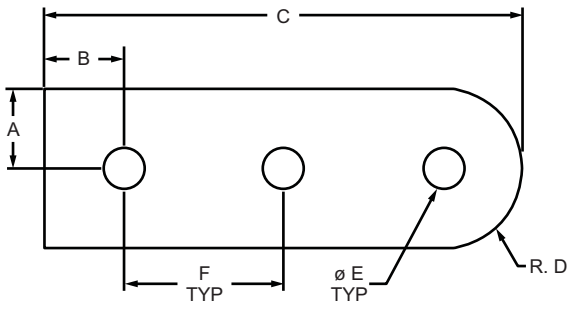

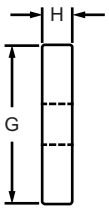

Part No.	Series	Color	A	B	C	D	E	F	G	H	Weight
4196	10	Clear	.500"	.500"	3.000"	.505"	.257"	1.000"	1.000"	.188"	.051 lb
4196-Black	10	Black	.500"	.500"	3.000"	.505"	.257"	1.000"	1.000"	.188"	.051 lb
4396	15	Clear	.745"	.750"	4.500"	.750"	.328"	1.500"	1.490"	.250"	.149 lb
4396-Black	15	Black	.745"	.750"	4.500"	.750"	.328"	1.500"	1.490"	.250"	.149 lb
25-4196	25	Clear	12.50mm	12.50mm	75.00mm	12.50mm	6.30mm	25.00mm	25.00mm	4.00mm	.0082 kg
25-4196-Black	25	Black	12.50mm	12.50mm	75.00mm	12.50mm	6.30mm	25.00mm	25.00mm	4.00mm	.0082 kg
40-4396	40	Clear	19.90mm	20.00mm	119.90mm	19.90mm	8.30mm	40.00mm	39.80mm	6.00mm	.0705 kg
40-4396-Black	40	Black	19.90mm	20.00mm	119.90mm	19.90mm	8.30mm	40.00mm	39.80mm	6.00mm	.0705 kg

Material Specifications

Material	Alloy*	Process	Finish
Aluminum	6105-T5	Milled	Anodize

* Or comparable

Suggested Hardware (Mount Arm to T-slot)

Part No.	Series	Qty.	Bolt	T-Nut
3321	10	3	1/4-20 x 1/2" FBHSCS	Economy
3320	15	3	5/16-18 x 11/16" FBHSCS	Economy
75-3404	25	3	M6 x 10mm BHSCS	Economy
75-3422	40	3	M8 x 16mm BHSCS	Economy

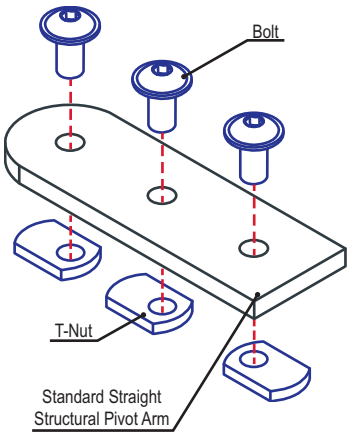

Part Description:

The extended straight structural pivot arm is an external connection method that can be used either with a nub or mounted directly to the T-slot.This part is typically used to create a structured angle connection between profiles while the extended arm provides a larger clearance area for pivot rotation. It provides a long-lasting connection, requires no machining services, and can be easily assembled, lending itself to repositioning and reuse. **Tip:** Use double slide-in economy T-nuts (pg. 366) to save time and money. Pre-load your hardware prior to connecting profiles to simplify your assembly and save time.

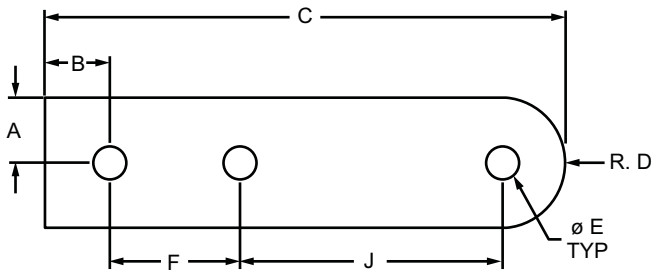

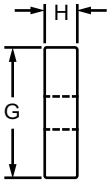

Part No.	Series	Color	A	B	C	D	E	F	G	H	J	Weight
4199	10	Clear	.500"	.500"	3.995"	.505"	.257"	1.000"	1.000"	.250"	2.010"	.092 lb
4199-Black	10	Black	.500"	.500"	3.995"	.505"	.257"	1.000"	1.000"	.250"	2.010"	.092 lb
4399	15	Clear	.745"	.750"	6.000"	.750"	.328"	1.500"	1.490"	.250"	3.000"	.203 lb
4399-Black	15	Black	.745"	.750"	6.000"	.750"	.328"	1.500"	1.490"	.250"	3.000"	.203 lb
25-4199	25	Clear	12.50mm	12.50mm	100.00mm	12.50mm	6.30mm	25.00mm	25.00mm	6.00mm	50.00mm	.0400 kg
25-4199-Black	25	Black	12.50mm	12.50mm	100.00mm	12.50mm	6.30mm	25.00mm	25.00mm	6.00mm	50.00mm	.0400 kg
40-4399	40	Clear	19.90mm	20.00mm	160.00mm	20.00mm	8.30mm	40.00mm	39.80mm	6.00mm	80.00mm	.0958 kg
40-4399-Black	40	Black	19.90mm	20.00mm	160.00mm	20.00mm	8.30mm	40.00mm	39.80mm	6.00mm	80.00mm	.0958 kg

Material Specifications

Material	Alloy*	Process	Finish
Aluminum	6105-T5	Milled	Anodize

* Or comparable

Suggested Hardware (Mount Arm to T-slot)

Part No.	Series	Qty.	Bolt	T-Nut
3321	10	3	1/4-20 x 1/2" FBHSCS	Economy
3320	15	3	5/16-18 x 11/16" FBHSCS	Economy
75-3404	25	3	M6 x 10mm BHSCS	Economy
75-3422	40	3	M8 x 16mm BHSCS	Economy

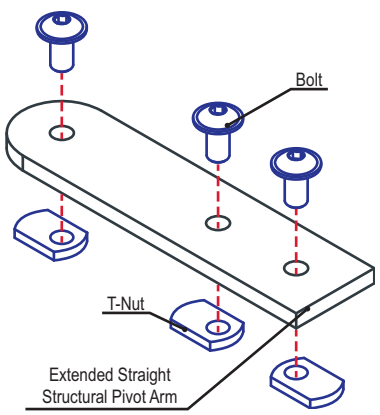

Standard Structural Pivot Assembly with Dual Straight Arms

Part Description:

The standard structural pivot assembly with dual straight arms comes preassembled with the pivot arms connected to the nub and includes the hardware to connect the nub to the mounting profile. It consists of one 0 degree, 90 degree or universal structural pivot nub and two straight structural pivot arms.

0 Degree Standard Structural Pivot

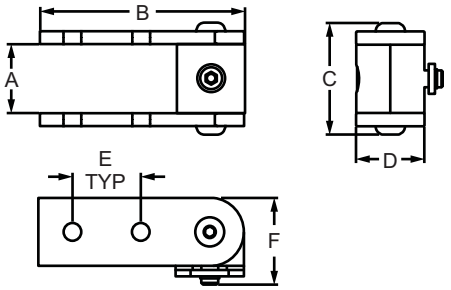

Part No.	Series	Color	Nub (Qty.)	Arm (Qty.)	A	B	C	D	E	F	Weight
4197	10	Clear	4187 (1)	4196 (2)	1.000"	3.010"	1.630"	1.000"	1.000"	1.275"	.163 lb
4197-Black	10	Black	4187 (1)	4196 (2)	1.000"	3.010"	1.630"	1.000"	1.000"	1.275"	.163 lb
4397	15	Clear	4387 (1)	4396 (2)	1.500"	4.500"	2.318"	1.500"	1.500"	1.945"	.663 lb
4397-Black	15	Black	4387 (1)	4396 (2)	1.500"	4.500"	2.318"	1.500"	1.500"	1.945"	.663 lb
25-4197	25	Clear	25-4187 (1)	25-4196 (2)	25.00mm	75.00mm	39.30mm	25.00mm	25.00mm	31.88mm	.0869 kg
25-4197-Black	25	Black	25-4187 (1)	25-4196 (2)	25.00mm	75.00mm	39.30mm	25.00mm	25.00mm	31.88mm	.0869 kg
40-4397	40	Clear	40-4387 (1)	40-4396 (2)	40.00mm	120.00mm	60.45mm	40.00mm	40.00mm	51.33mm	.3271 kg
40-4397-Black	40	Black	40-4387 (1)	40-4396 (2)	40.00mm	120.00mm	60.45mm	40.00mm	40.00mm	51.33mm	.3271 kg

90 Degree Standard Structural Pivot

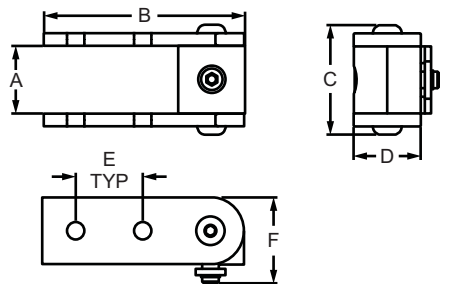

Part No.	Series	Color	Nub (Qty.)	Arm (Qty.)	A	B	C	D	E	F	Weight
4198	10	Clear	4188 (1)	4196 (2)	1.000"	3.010"	1.630"	1.000"	1.000"	1.275"	.164 lb
4198-Black	10	Black	4188 (1)	4196 (2)	1.000"	3.010"	1.630"	1.000"	1.000"	1.275"	.164 lb
4398	15	Clear	4388 (1)	4396 (2)	1.500"	4.500"	2.318"	1.500"	1.500"	1.945"	.476 lb
4398-Black	15	Black	4388 (1)	4396 (2)	1.500"	4.500"	2.318"	1.500"	1.500"	1.945"	.476 lb
25-4198	25	Clear	25-4188 (1)	25-4196 (2)	25.00mm	75.00mm	39.30mm	25.00mm	25.00mm	31.88mm	.0872 kg
25-4198-Black	25	Black	25-4188 (1)	25-4196 (2)	25.00mm	75.00mm	39.30mm	25.00mm	25.00mm	31.88mm	.0872 kg
40-4398	40	Clear	40-4388 (1)	40-4396 (2)	40.00mm	120.00mm	60.45mm	40.00mm	40.00mm	51.33mm	.2968 kg
40-4398-Black	40	Black	40-4388 (1)	40-4396 (2)	40.00mm	120.00mm	60.45mm	40.00mm	40.00mm	51.33mm	.2968 kg

CONTINUE

Standard Structural Pivot Assembly with Dual Straight Arms (Continued)

Universal Standard Structural Pivot

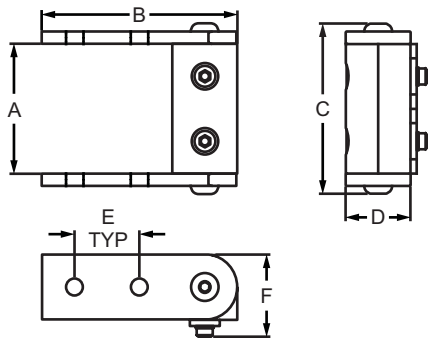

Part No.	Series	Color	Nub (Qty.)	Arm (Qty.)	A	B	C	D	E	F	Weight
4195	10	Clear	4186 (1)	4196 (2)	2.000"	3.010"	2.630"	1.275"	1.000"	1.275"	.288 lb
4195-Black	10	Black	4186 (1)	4196 (2)	2.000"	3.010"	2.630"	1.275"	1.000"	1.275"	.288 lb
4395	15	Clear	4386 (1)	4396 (2)	3.000"	4.500"	3.313"	1.945"	1.500"	1.945"	1.118 lb
4395-Black	15	Black	4386 (1)	4396 (2)	3.000"	4.500"	3.313"	1.945"	1.500"	1.945"	1.118 lb
25-4195	25	Clear	25-4186 (1)	25-4196 (2)	50.00mm	75.00mm	64.30mm	31.88mm	25.00mm	31.88mm	.1298 kg
25-4195-Black	25	Black	25-4186 (1)	25-4196 (2)	50.00mm	75.00mm	64.30mm	31.88mm	25.00mm	31.88mm	.1298 kg
40-4395	40	Clear	40-4386 (1)	40-4396 (2)	80.00mm	120.00mm	85.45mm	51.33mm	40.00mm	51.33mm	.3479 kg
40-4395-Black	40	Black	40-4386 (1)	40-4396 (2)	80.00mm	120.00mm	85.45mm	51.33mm	40.00mm	51.33mm	.3479 kg

Material Specifications

Material	Alloy*	Process	Finish
Aluminum	6105-T5	Milled	Anodize

* Or comparable

Included Hardware (Mount Arm to Nub)

Part No.	Series	Qty.	Bolt	T-Nut
3342	10	2	1/4-20 x 1/2" FBHSCS	—
3330	15	2	5/16-18 x 5/8" FBHSCS	—
13-6312	25	2	M6 x 12mm BHSCS	—
13-8316	40	2	M8 x 16mm BHSCS	—

Included Hardware (Mount Nub to T-Slot)

Part No.	Series	Qty.	Bolt	T-Nut
3306	10	1 or 2	1/4-20 x 1" SHCS	Economy
3613	15	1 or 2	5/16-18 x 1.5" SHCS	Economy
75-3415	25	1 or 2	M6 x 25mm SHCS	Economy
75-3479	40	1 or 2	M8 x 40mm SHCS	Economy

Suggested Hardware (Mount Arm to T-Slot)

Part No.	Series	Qty.	Bolt	T-Nut
3393	10	4	1/4-20 x 1/2" BHSCS	Economy
3320	15	4	5/16-18 x 11/16" FBHSCS	Economy
75-3404	25	4	M6 x 10mm BHSCS	Economy
75-3422	40	4	M8 x 16mm BHSCS	Economy

0 Degree Standard Structural Pivot

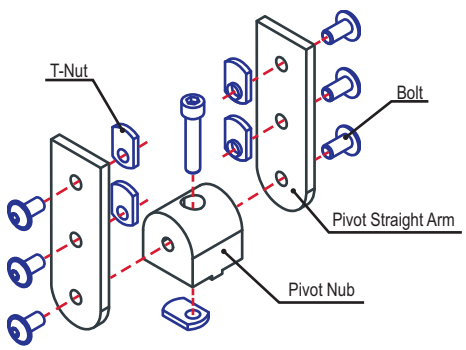

Universal Standard Structural Pivot

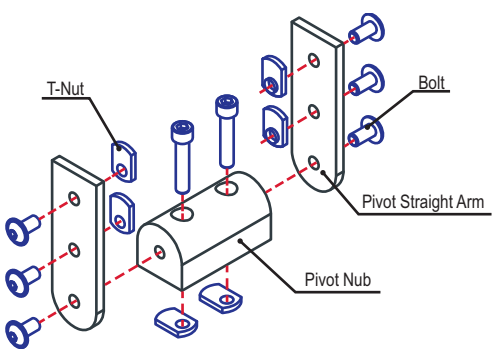

Standard Structural Pivot Assembly with Dual “L” Arms

Part Description:

The standard structural pivot assembly with dual “L” arms comes preassembled with the pivot arms connected to the nub and includes the hardware to connect the nub to the mounting profile. It consists of one 0 degree, 90 degree or universal structural pivot nub and two “L” structural pivot arms.

0 Degree Standard Structural Pivot

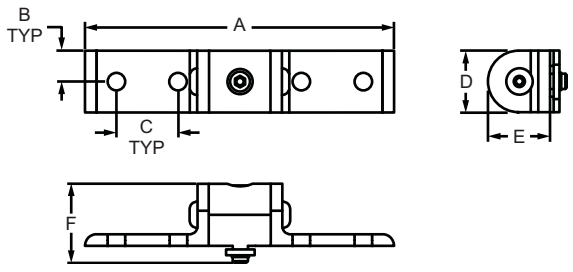

Part No.	Series	Color	Nub (Qty.)	Arm (Qty.)	A	B	C	D	E	F	Weight
4153	10	Clear	4187 (1)	4149 (2)	5.000”	.500”	1.000”	1.000”	1.000”	1.275”	.208 lb
4153-Black	10	Black	4187 (1)	4149 (2)	5.000”	.500”	1.000”	1.000”	1.000”	1.275”	.208 lb
4353	15	Clear	4387 (1)	4349 (2)	7.500”	.750”	1.500”	1.500”	1.500”	1.945”	.651 lb
4353-Black	15	Black	4387 (1)	4349 (2)	7.500”	.750”	1.500”	1.500”	1.500”	1.945”	.651 lb
25-4153	25	Clear	25-4187 (1)	25-4149 (2)	125.00mm	12.50mm	25.00mm	25.00mm	25.00mm	31.88mm	.0843 kg
25-4153-Black	25	Black	25-4187 (1)	25-4149 (2)	125.00mm	12.50mm	25.00mm	25.00mm	25.00mm	31.88mm	.0843 kg
40-4353	40	Clear	40-4387 (1)	40-4349 (2)	200.00mm	20.00mm	40.00mm	40.00mm	40.00mm	51.33mm	.3221 kg
40-4353-Black	40	Black	40-4387 (1)	40-4349 (2)	200.00mm	20.00mm	40.00mm	40.00mm	40.00mm	51.33mm	.3221 kg

90 Degree Standard Structural Pivot

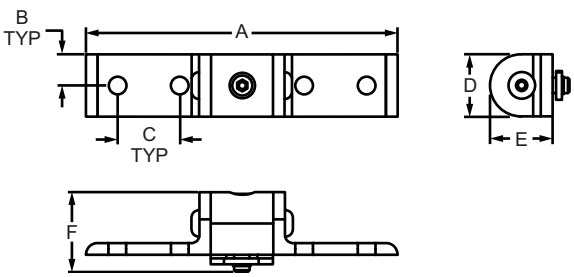

Part No.	Series	Color	Nub (Qty.)	Arm (Qty.)	A	B	C	D	E	F	Weight
4154	10	Clear	4188 (1)	4149 (2)	5.000”	.500”	1.000”	1.000”	1.000”	1.275”	.209 lb
4154-Black	10	Black	4188 (1)	4149 (2)	5.000”	.500”	1.000”	1.000”	1.000”	1.275”	.209 lb
4354	15	Clear	4388 (1)	4349 (2)	7.500”	.750”	1.500”	1.500”	1.500”	1.945”	.654 lb
4354-Black	15	Black	4388 (1)	4349 (2)	7.500”	.750”	1.500”	1.500”	1.500”	1.945”	.654 lb
25-4154	25	Clear	25-4188 (1)	25-4149 (2)	125.00mm	12.50mm	25.00mm	25.00mm	25.00mm	31.88mm	.0843 kg
25-4154-Black	25	Black	25-4188 (1)	25-4149 (2)	125.00mm	12.50mm	25.00mm	25.00mm	25.00mm	31.88mm	.0843 kg
40-4354	40	Clear	40-4388 (1)	40-4349 (2)	200.00mm	20.00mm	40.00mm	40.00mm	40.00mm	51.33mm	.3212 kg
40-4354-Black	40	Black	40-4388 (1)	40-4349 (2)	200.00mm	20.00mm	40.00mm	40.00mm	40.00mm	51.33mm	.3212 kg

CONTINUE

Standard Structural Pivot Assembly with Dual "L" Arms (Continued)

Universal Standard Structural Pivot

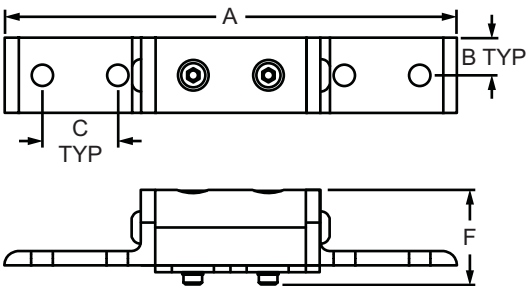

Part No.	Series	Color	Nub (Qty.)	Arm (Qty.)	A	B	C	D	E	F	Weight
4156	10	Clear	4186 (1)	4149 (2)	6.000"	.500"	1.000"	1.000"	1.000"	1.275"	.311 lb
4156-Black	10	Black	4186 (1)	4149 (2)	6.000"	.500"	1.000"	1.000"	1.000"	1.275"	.311 lb
4356	15	Clear	4386 (1)	4349 (2)	9.000"	.750"	1.500"	1.500"	1.500"	1.945"	.972 lb
4356-Black	15	Black	4386 (1)	4349 (2)	9.000"	.750"	1.500"	1.500"	1.500"	1.945"	.972 lb
25-4156	25	Clear	25-4186 (1)	25-4149 (2)	150.00mm	12.50mm	25.00mm	25.00mm	25.00mm	31.88mm	.1268 kg
25-4156-Black	25	Black	25-4186 (1)	25-4149 (2)	150.00mm	12.50mm	25.00mm	25.00mm	25.00mm	31.88mm	.1268 kg
40-4356	40	Clear	40-4386 (1)	40-4349 (2)	240.00mm	20.00mm	40.00mm	40.00mm	40.00mm	51.33mm	.4938 kg
40-4356-Black	40	Black	40-4386 (1)	40-4349 (2)	240.00mm	20.00mm	40.00mm	40.00mm	40.00mm	51.33mm	.4938 kg

Material Specifications

Material	Alloy*	Process	Finish
Aluminum	6105-T5	Milled	Anodize

* Or comparable

Included Hardware (Mount Arm to Nub)

Part No.	Series	Qty.	Bolt	T-Nut
3342	10	2	1/4-20 x 1/2" FBHSCS	—
3330	15	2	5/16-18 x 5/8" FBHSCS	—
13-6312	25	2	M6 x 12mm BHSCS	—
13-8316	40	2	M8 x 16mm BHSCS	—

Included Hardware (Mount Nub to T-Slot)

Part No.	Series	Qty.	Bolt	T-Nut
3306	10	1 or 2	1/4-20 x 1" SHCS	Economy
3613	15	1 or 2	5/16-18 x 1.5" SHCS	Economy
75-3415	25	1 or 2	M6 x 25mm SHCS	Economy
75-3479	40	1 or 2	M8 x 40mm SHCS	Economy

Suggested Hardware (Mount Arm to T-Slot)

Part No.	Series	Qty.	Bolt	T-Nut
3393	10	4	1/4-20 x 1/2" BHSCS	Economy
3320	15	4	5/16-18 x 11/16" FBHSCS	Economy
75-3404	25	4	M6 x 10mm BHSCS	Economy
75-3422	40	4	M8 x 16mm BHSCS	Economy

0 Degree Standard Structural Pivot

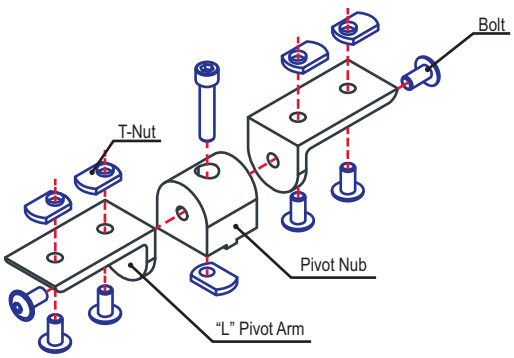

Universal Standard Structural Pivot

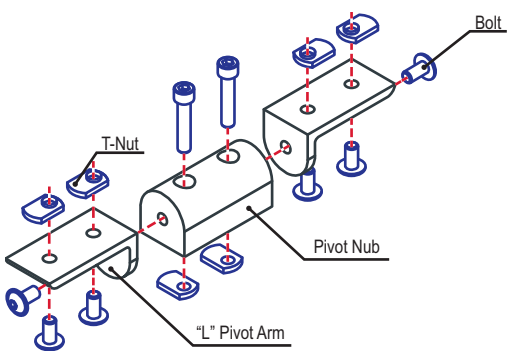

Standard Structural Pivot Assembly with Straight and "L" Arm

Part Description:

The standard structural pivot assembly with straight and "L" arm comes preassembled with the pivot arms connected to the nub and includes the hardware to connect the nub to the mounting profile. It consists of one 0 degree, 90 degree or universal structural pivot nub, one standard straight structural pivot arm and one "L" structural pivot arm.

0 Degree Standard Structural Pivot

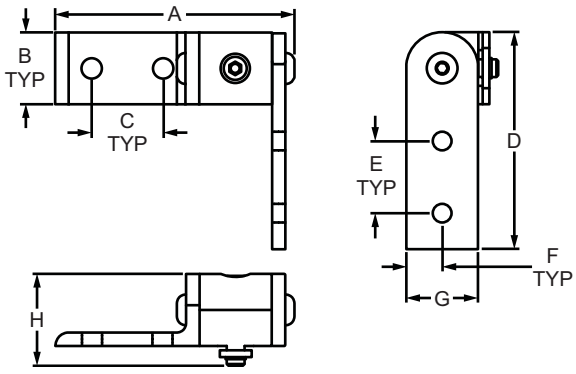

Part No.	Series	Color	Nub (Qty.)	Arm (Qty.)	A	B	C	D	E	F	G	H	Weight
4157	10	Clear	4187 (1)	4196 (1), 4149 (1)	3.315"	.500"	1.000"	3.010"	1.000"	.500"	1.000"	1.275"	.164 lb
4157-Black	10	Black	4187 (1)	4196 (1), 4149 (1)	3.315"	.500"	1.000"	3.010"	1.000"	.500"	1.000"	1.275"	.164 lb
4357	15	Clear	4387 (1)	4396 (1), 4349 (1)	4.909"	.750"	1.500"	4.500"	1.500"	.745"	1.495"	1.900"	.507 lb
4357-Black	15	Black	4387 (1)	4396 (1), 4349 (1)	4.909"	.750"	1.500"	4.500"	1.500"	.745"	1.495"	1.900"	.507 lb

90 Degree Standard Structural Pivot

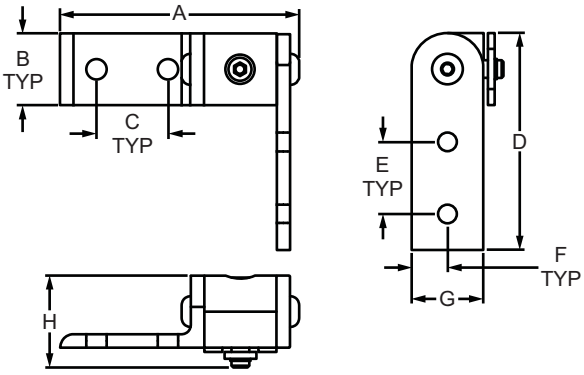

Part No.	Series	Color	Nub (Qty.)	Arm (Qty.)	A	B	C	D	E	F	G	H	Weight
4158	10	Clear	4188 (1)	4196 (1), 4149 (1)	3.315"	.500"	1.000"	3.010"	1.000"	.500"	1.000"	1.275"	.163 lb
4158-Black	10	Black	4188 (1)	4196 (1), 4149 (1)	3.315"	.500"	1.000"	3.010"	1.000"	.500"	1.000"	1.275"	.163 lb
4358	15	Clear	4388 (1)	4396 (1), 4349 (1)	6.409"	.750"	1.500"	4.500"	1.500"	.745"	1.495"	1.900"	.505 lb
4358-Black	15	Black	4388 (1)	4396 (1), 4349 (1)	6.409"	.750"	1.500"	4.500"	1.500"	.745"	1.495"	1.900"	.505 lb

CONTINUE

Standard Structural Pivot Assembly with Straight and "L" Arm (Continued)

Universal Standard Structural Pivot

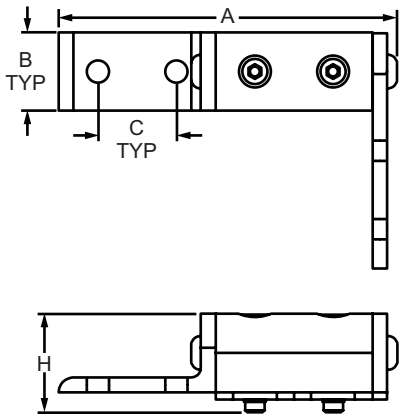

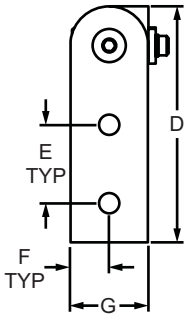

Part No.	Series	Color	Nub (Qty.)	Arm (Qty.)	A	B	C	D	E	F	G	H	Weight
4159	10	Clear	4186 (1)	4196 (1), 4149 (1)	4.315"	.500"	1.000"	3.010"	1.000"	.500"	1.000"	1.257"	.317 lb
4159-Black	10	Black	4186 (1)	4196 (1), 4149 (1)	4.315"	.500"	1.000"	3.010"	1.000"	.500"	1.000"	1.257"	.317 lb
4359	15	Clear	4386 (1)	4396 (1), 4349 (1)	6.409"	.750"	1.500"	4.500"	1.500"	.745"	1.495"	1.900"	.986 lb
4359-Black	15	Black	4386 (1)	4396 (1), 4349 (1)	6.409"	.750"	1.500"	4.500"	1.500"	.745"	1.495"	1.900"	.986 lb

Material Specifications

Material	Alloy*	Process	Finish
Aluminum	6105-T5	Milled	Anodize

* Or comparable

Included Hardware (Mount Arm to Nub)

Part No.	Series	Qty.	Bolt	T-Nut
3342	10	2	1/4-20 x 1/2" FBHSCS	—
3330	15	2	5/16-18 x 5/8" FBHSCS	—

Suggested Hardware (Mount Arm to T-Slot)

Part No.	Series	Qty.	Bolt	T-Nut
3393	10	4	1/4-20 x 1/2" BHSCS	Economy
3320	15	4	5/16-18 x 11/16" FBHSCS	Economy

Included Hardware (Mount Nub to T-Slot)

Part No.	Series	Qty.	Bolt	T-Nut
3306	10	1 or 2	1/4-20 x 1" SHCS	Economy
3613	15	1 or 2	5/16-18 x 1.5" SHCS	Economy

0 Degree Standard Structural Pivot

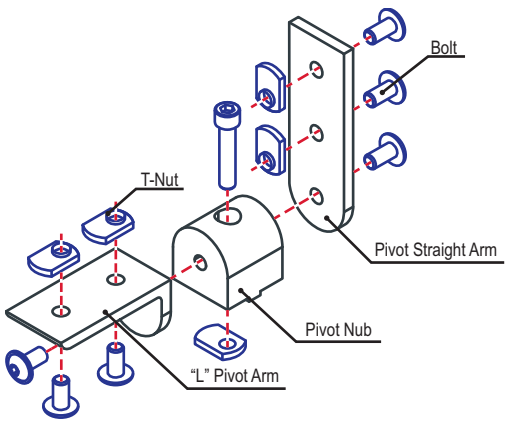

Universal Standard Structural Pivot

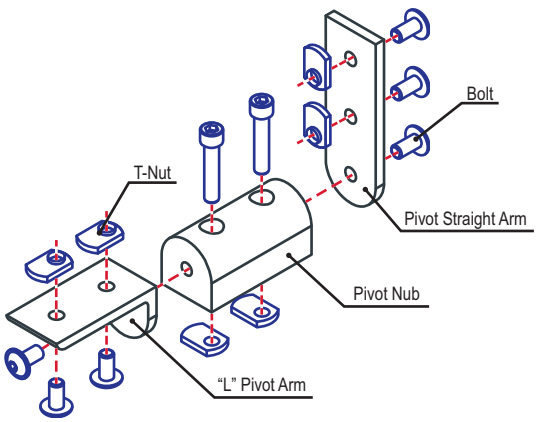

Right Angle Structural Pivot Assembly with Dual Straight Arms

Part Description:

The right angle structural pivot assembly with dual straight arms comes preassembled with the pivot arms connected to the nub and includes the hardware to connect the nub to the mounting profile. It consists of one 0 degree, 90 degree or universal structural right angle pivot nub and two straight structural pivot arms.

0 Degree Right Angle Structural Pivot

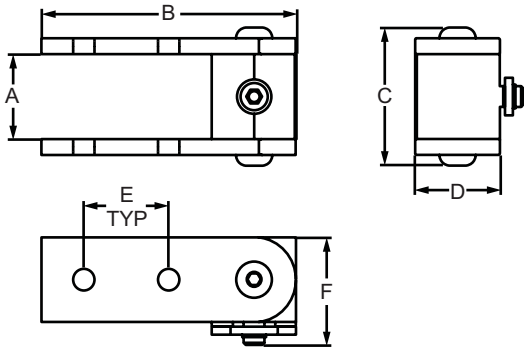

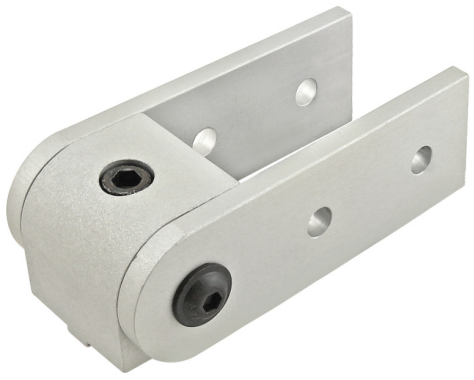

Part No.	Series	Color	Nub (Qty.)	Arm (Qty.)	A	B	C	D	E	F	Weight
4004	10	Clear	4001 (1)	4196 (2)	1.000"	3.010"	1.630"	1.000"	1.000"	1.275"	.226 lb
4004-Black	10	Black	4001 (1)	4196 (2)	1.000"	3.010"	1.630"	1.000"	1.000"	1.275"	.226 lb
4404	15	Clear	4401 (1)	4396 (2)	1.500"	4.500"	2.318"	1.500"	1.500"	1.950"	.683 lb
4404-Black	15	Black	4401 (1)	4396 (2)	1.500"	4.500"	2.318"	1.500"	1.500"	1.950"	.683 lb

90 Degree Right Angle Structural Pivot

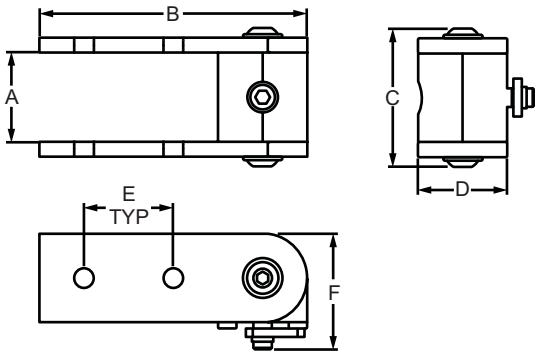

Part No.	Series	Color	Nub (Qty.)	Arm (Qty.)	A	B	C	D	E	F	Weight
4005	10	Clear	4002 (1)	4196 (2)	1.000"	3.010"	1.630"	1.000"	1.000"	1.275"	.225 lb
4005-Black	10	Black	4002 (1)	4196 (2)	1.000"	3.010"	1.630"	1.000"	1.000"	1.275"	.225 lb
4405	15	Clear	4402 (1)	4396 (2)	1.500"	4.500"	2.318"	1.500"	1.500"	1.945"	.688 lb
4405-Black	15	Black	4402 (1)	4396 (2)	1.500"	4.500"	2.318"	1.500"	1.500"	1.945"	.688 lb

CONTINUE

Right Angle Structural Pivot Assembly with Dual Straight Arms (Continued)

Universal Right Angle Structural Pivot

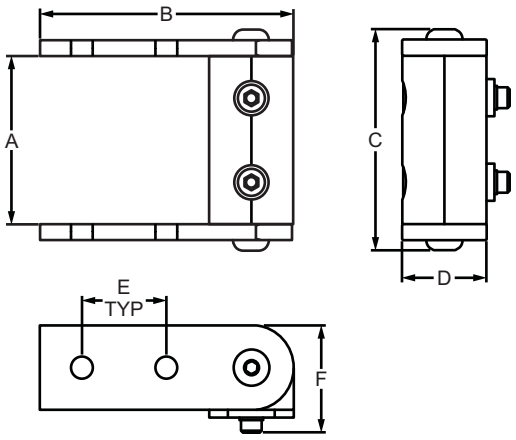

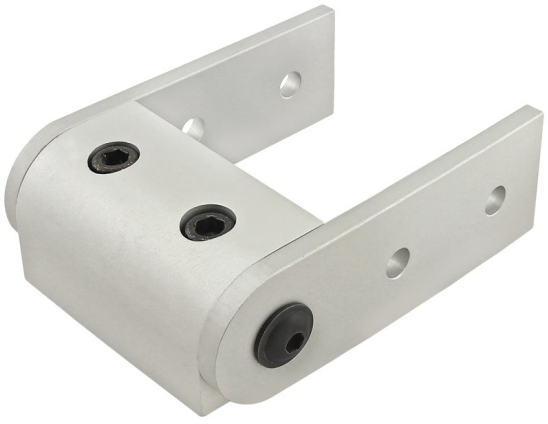

Part No.	Series	Color	Nub (Qty.)	Arm (Qty.)	A	B	C	D	E	F	Weight
4006	10	Clear	4003 (1)	4196 (2)	2.000"	3.010"	2.630"	1.000"	1.000"	1.280"	.322 lb
4006-Black	10	Black	4003 (1)	4196 (2)	2.000"	3.010"	2.630"	1.000"	1.000"	1.280"	.322 lb
4406	15	Clear	4403 (1)	4396 (2)	3.000"	4.500"	3.818"	1.500"	1.500"	1.945"	1.002 lb
4406-Black	15	Black	4403 (1)	4396 (2)	3.000"	4.500"	3.818"	1.500"	1.500"	1.945"	1.002 lb

Material Specifications

Material	Alloy*	Process	Finish
Aluminum	6105-T5	Milled	Anodize

* Or comparable

Included Hardware (Mount Arm to Nub)

Part No.	Series	Qty.	Bolt	T-Nut
3342	10	2	1/4-20 x 1/2" FBHSCS	—
3330	15	2	5/16-18 x 5/8" FBHSCS	—

Suggested Hardware (Mount Arm to T-Slot)

Part No.	Series	Qty.	Bolt	T-Nut
3393	10	4	1/4-20 x 1/2" BHSCS	Economy
3320	15	4	5/16-18 x 11/16" FBHSCS	Economy

Included Hardware (Mount Nub to T-Slot)

Part No.	Series	Qty.	Bolt	T-Nut
3306	10	1 or 2	1/4-20 x 1" SHCS	Economy
3613	15	1 or 2	5/16-18 x 1.5" SHCS	Economy

90 Degree Right Angle Structural Pivot

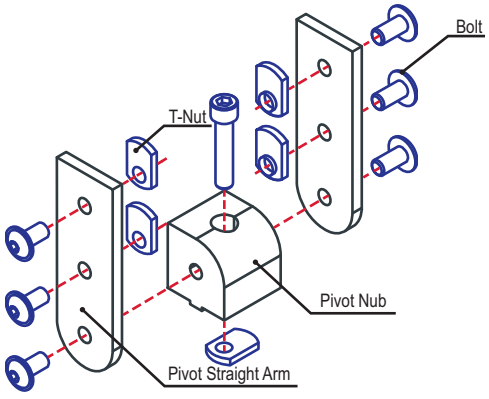

Universal Right Angle Structural Pivot

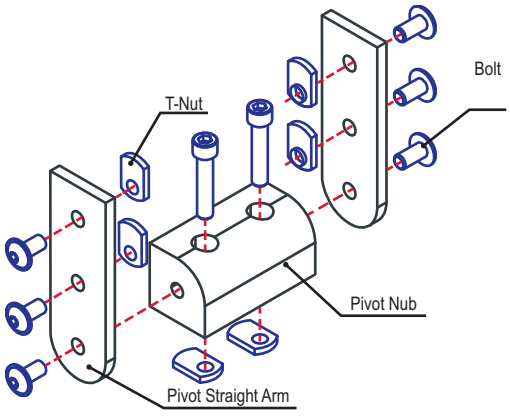

Right Angle Structural Pivot Assembly with Dual "L" Arms

Part Description:

The right angle structural pivot assembly with dual "L" arms comes preassembled with the pivot arms connected to the nub and includes the hardware to connect the nub to the mounting profile. It consists of one 0 degree, 90 degree or universal structural right angle pivot nub and two "L" structural pivot arms.

0 Degree Right Angle Structural Pivot

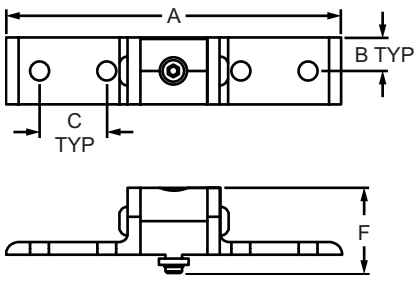

Part No.	Series	Color	Nub (Qty.)	Arm (Qty.)	A	B	C	D	E	F	Weight
4007	10	Clear	4001 (1)	4149 (2)	5.000"	.500"	1.000"	1.000"	1.000"	1.275"	.213 lb
4007-Black	10	Black	4001 (1)	4149 (2)	5.000"	.500"	1.000"	1.000"	1.000"	1.275"	.213 lb
4407	15	Clear	4401 (1)	4349 (2)	7.500"	.750"	1.500"	1.500"	1.500"	1.945"	.662 lb
4407-Black	15	Black	4401 (1)	4349 (2)	7.500"	.750"	1.500"	1.500"	1.500"	1.945"	.662 lb

90 Degree Right Angle Structural Pivot

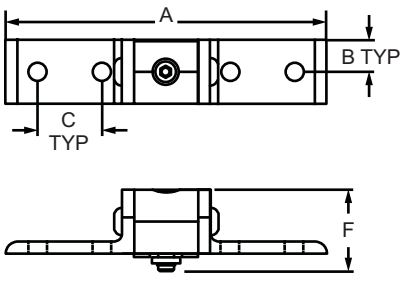

Part No.	Series	Color	Nub (Qty.)	Arm (Qty.)	A	B	C	D	E	F	Weight
4008	10	Clear	4002 (1)	4149 (2)	5.000"	.500"	1.000"	1.000"	1.000"	1.275"	.213 lb
4008-Black	10	Black	4002 (1)	4149 (2)	5.000"	.500"	1.000"	1.000"	1.000"	1.275"	.213 lb
4408	15	Clear	4402 (1)	4349 (2)	7.500"	.750"	1.500"	1.500"	1.500"	1.945"	.657 lb
4408-Black	15	Black	4402 (1)	4349 (2)	7.500"	.750"	1.500"	1.500"	1.500"	1.945"	.657 lb

CONTINUE

Right Angle Structural Pivot Assembly with Dual "L" Arms (Continued)

Universal Right Angle Structural Pivot

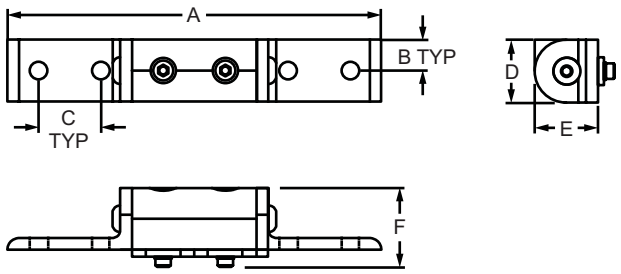

Part No.	Series	Color	Nub (Qty.)	Arm (Qty.)	A	B	C	D	E	F	Weight
4009	10	Clear	4003 (1)	4149 (2)	6.000"	.500"	1.000"	1.000"	1.000"	1.275"	.319 lb
4009-Black	10	Black	4003 (1)	4149 (2)	6.000"	.500"	1.000"	1.000"	1.000"	1.275"	.319 lb
4409	15	Clear	4403 (1)	4349 (2)	9.000"	.750"	1.500"	1.500"	1.500"	1.945"	1.013 lb
4409-Black	15	Black	4403 (1)	4349 (2)	9.000"	.750"	1.500"	1.500"	1.500"	1.945"	1.013 lb

Material Specifications

Material	Alloy*	Process	Finish
Aluminum	6105-T5	Milled	Anodize

* Or comparable

Included Hardware (Mount Arm to Nub)

Part No.	Series	Qty.	Bolt	T-Nut
3342	10	2	1/4-20 x 1/2" FBHSCS	—
3330	15	2	5/16-18 x 5/8" FBHSCS	—

Suggested Hardware (Mount Arm to T-Slot)

Part No.	Series	Qty.	Bolt	T-Nut
3393	10	4	1/4-20 x 1/2" BHSCS	Economy
3320	15	4	5/16-18 x 11/16" FBHSCS	Economy

Included Hardware (Mount Nub to T-Slot)

Part No.	Series	Qty.	Bolt	T-Nut
3306	10	1 or 2	1/4-20 x 1" SHCS	Economy
3613	15	1 or 2	5/16-18 x 1.5" SHCS	Economy

90 Degree Right Angle Structural Pivot

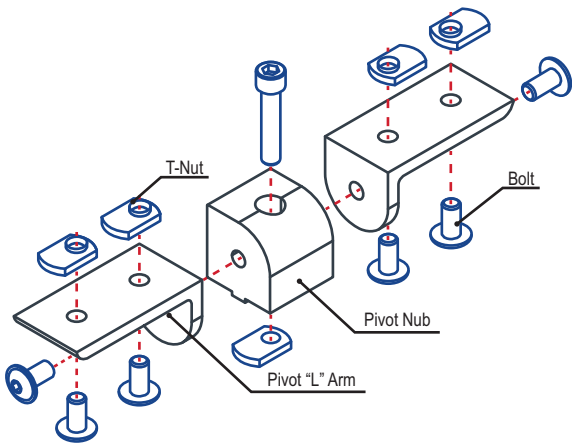

Universal Right Angle Structural Pivot

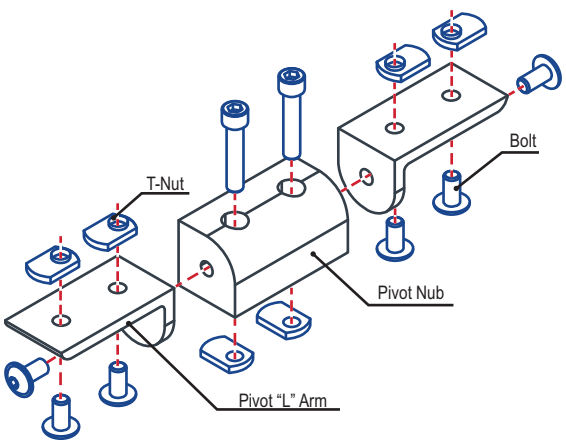

Slide-In Economy T-Nut - Centered Thread

Part Description:

The slide-in economy T-nut with centered thread is a cost-effective fastening method available with options in size, material, thread, and finish. It loads from the profile ends and has a pilot thread projection that adds additional threading for increased strength. The centered thread of the slide-in economy T-nut lends itself to connections towards the middle of a profile or with a flat plate. This T-nut is available in a double (pg. 366) or triple (pg. 367) configuration. For information on 80/20 screw and bolt offerings for the slide-in economy T-nut refer to pages beginning on 387. **Tip:** Position the pilot projection down in the T-slot to avoid an uneven connection or crashing.

Style #1

Style #2

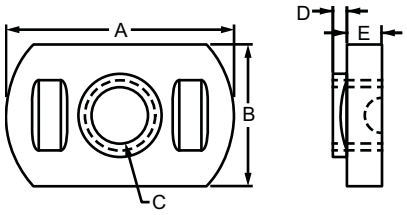

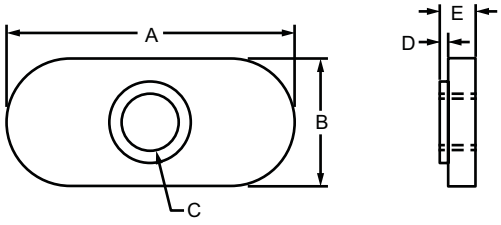

Part No.	Series	Style	Material	Grade	Finish	A	B	C (Thread)	D	E	Weight
3275	10	Style 2	Steel	1010	Black Zinc	.875"	.443"	8-32	.030"	.124"	.008 lb
3276	10	Style 2	Steel	1010	Black Zinc	.875"	.443"	10-32	.030"	.124"	.008 lb
3675	10	Style 2	Stainless-Steel	18-8	Stainless	1.000"	.443"	1/4-20	.030"	.124"	.010 lb
3382	10	Style 2	Steel	1010	Black Zinc	1.000"	.443"	1/4-20	.030"	.124"	.009 lb
3785	10	Style 2	Steel	1010	Bright Zinc	1.000"	.443"	1/4-20	.030"	.124"	.010 lb
3859	10	Style 2	Steel	1010	Bright Zinc	1.000"	.443"	M6 x 1.0	.030"	.124"	.010 lb
3686	15	Style 1	Stainless-Steel	304 Stainless	Stainless	.812"	.505"	1/4-20	.050"	.125"	.013 lb
3286	15	Style 1	Steel	1010	Black Zinc	.812"	.505"	1/4-20	.050"	.125"	.009 lb
3786	15	Style 1	Steel	1010	Bright Zinc	.812"	.505"	1/4-20	.050"	.125"	.012 lb
3789	15	Style 1	Steel	1010	Bright Zinc	.984"	.505"	5/16-18	.078"	.133"	.015 lb
3836	15	Style 2	Steel	1010	Bright Zinc	1.125"	.505"	M6 x 1.0	.050"	.130"	.018 lb
25-3382	25	Style 2	Steel	1010	Black Zinc	25.40mm	11.25mm	1/4-20	.76mm	3.15mm	.0041 kg
25-1961	25	Style 2	Steel	1010	Bright Zinc	25.40mm	11.25mm	M6 x 1.0	.76mm	3.15mm	.0041 kg
30-3789	30	Style 1	Steel	1010	Bright Zinc	25.40mm	12.60mm	5/16-18	2.00mm	3.60mm	.0068 kg
30-3796	30	Style 1	Steel	1010	Bright Zinc	25.40mm	12.60mm	M8 x 1.25	2.00mm	3.60mm	.0053 kg
40-3286	40	Style 1	Steel	1010	Black Zinc	20.62mm	12.83mm	1/4-20	1.27mm	4.45mm	.0054 kg
40-1961	40	Style 2	Steel	1010	Bright Zinc	28.58mm	12.83mm	M6 x 1.0	1.27mm	4.45mm	.0079 kg

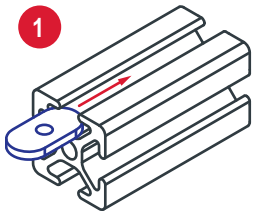

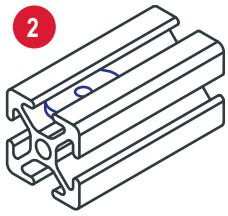

Part Description:

The slide-in economy T-nut with offset thread is a cost-effective fastening method available with options in size, material, and finish. It loads from the profile ends and has a pilot thread projection that adds additional threading for increased strength. The offset thread of the slide-in economy T-nut creates clean connections, making it ideal for corner connections because the T-nut doesn't extend beyond the length of the profile. This T-nut is available in a double (pg. 366) or triple (pg. 367) configuration. For information on 80/20 screw and bolt offerings for the slide-in economy T-nut with offset thread refer to pages beginning on 387. **Tip:** Position the pilot projection down in the T-slot to avoid an uneven connection or crashing.

Style #1

Style #2

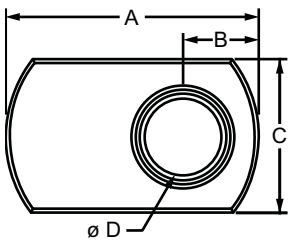

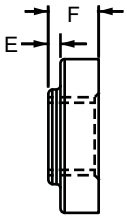

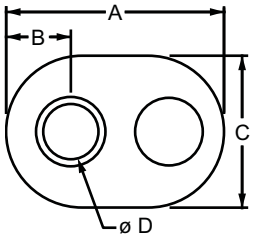

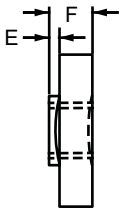

Part No.	Series	Style	Material	Grade	Finish	A	B	C	D (Thread)	E	F	Weight
3676	10	Style 1	Stainless-Steel	304 Stainless	Stainless	.625"	.187"	.380"	10-32	.030"	.124"	.005 lb
3278	15	Style 1	Steel	1010	Black Zinc	.984"	.281"	.638"	5/16-18	.080"	.222"	.020 lb
3778	15	Style 1	Steel	1010	Bright Zinc	.984"	.281"	.638"	5/16-18	.080"	.222"	.020 lb
3838	15	Style 1	Steel	1010	Bright Zinc	.984"	.281"	.638"	M8 X 1.25	.080"	.222"	.020 lb
3678	15	Style 1	Stainless-Steel	304 Stainless	Stainless	1.113"	.281"	.638"	5/16-18	.080"	.222"	.027 lb
25-1941	25	Style 2	Steel	1010	Bright Zinc	15.87mm	4.75mm	11.00mm	M4 x 0.7	.76mm	3.14mm	.0027 kg
25-1951	25	Style 2	Steel	1010	Bright Zinc	15.87mm	4.75mm	11.00mm	M5 x 0.8	.76mm	3.14mm	.0024 kg
30-1961	30	Style 1	Steel	1010	Bright Zinc	20.60mm	6.40mm	13.00mm	M6 x 1.0	1.27mm	4.44mm	.0056 kg
40-1981	40	Style 1	Steel	1010	Bright Zinc	24.99mm	7.14mm	16.19mm	M8 x 1.25	2.03mm	5.64mm	.0092 kg
40-3278	40	Style 1	Steel	1010	Black Zinc	24.99mm	7.14mm	16.19mm	5/16-18	2.03mm	5.64mm	.0090 kg

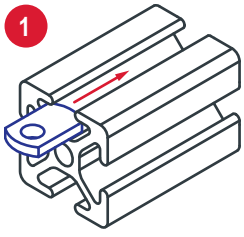

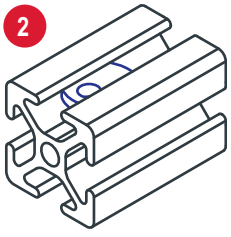

Double Slide-In Economy T-Nut

Part Description:

The double slide-in economy T-nut is a fastening option that saves time and simplifies the assembly process. It loads from the profile ends and is available with options in size and finish. The pilot projection adds additional threading for increased strength. There is also a triple slide-in economy T-nut available (page 367). For information on 80/20 screw and bolt offerings for the double slide-in economy T-nut refer to pages beginning on 387. **Tip:** Position the pilot projection down in the T-slot to avoid an uneven connection or crashing.

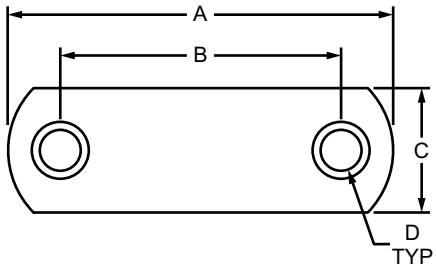

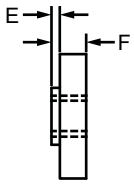

Part No.	Series	Material	Grade	Finish	A	B	C	D (Thread)	E	F	Weight
3281	10	Steel	1010	Black Zinc	1.375"	1.000"	.443"	8-32	.030"	.124"	.015 lb
3280	10			Black Zinc	1.875"	1.000"	.443"	1/4-20	.050"	.144"	.019 lb
3800	10			Bright Zinc	1.875"	1.000"	.443"	M6 x 1.0	.050"	.144"	.020 lb
3279	15			Black Zinc	2.813"	1.500"	.638"	5/16-18	.080"	.222"	.061 lb
3879	15			Bright Zinc	3.000"	1.500"	.638"	M8 x 1.25	.080"	.222"	.067 lb
25-1962	25			Bright Zinc	47.60mm	25.00mm	11.20mm	M6 x 1.0	1.27mm	3.68mm	.0093 kg
40-1982	40			Bright Zinc	75.00mm	40.00mm	16.20mm	M8 x 1.25	2.00mm	5.60mm	.0293 kg

1

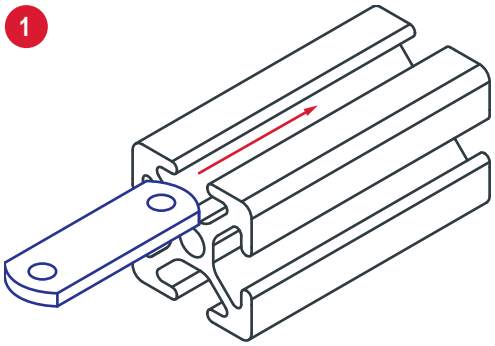

2

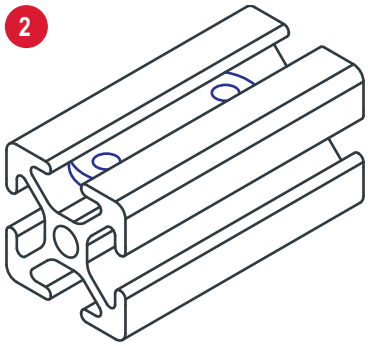

Triple Slide-In Economy T-Nut / Economy T-Nut Holding Spring

Part Description:

The triple slide-in economy T-nut is a fastening option that saves time and simplifies the assembly process. It is especially useful for multiple-hole flat plates. This fastener loads from the profile ends and is available with options in size and finish. The pilot thread projection adds additional threading for increased strength. For information on 80/20 screw and bolt offerings for the triple slide-in economy T-nut refer to pages beginning on 387. **Tip:** Position the pilot projection down in the T-slot to avoid an uneven connection or crashing.

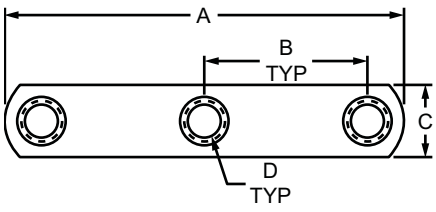

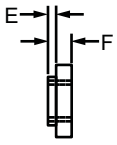

Part No.	Series	Material	Grade	Finish	A	B	C	D (Thread)	E	F	Weight
3287	10	Steel	1010	Black Zinc	2.450"	1.000"	.443"	1/4-20	.050"	.144"	.025 lb
3900	10			Bright Zinc	2.450"	1.000"	.443"	M6 x 1.0	.050"	.144"	.034 lb
3285	15			Black Zinc	3.562"	1.500"	.638"	5/16-18	.080"	.222"	.077 lb
3805	15			Bright Zinc	3.562"	1.500"	.638"	M8 x 1.25	.080"	.222"	.080 lb

Economy T-Nut Holding Spring

The economy T-nut holding spring, available in 15 and 40 series, snaps onto the pilot projection of the 15 and 40 series Style 1 economy T-nut (page 364), double economy slide-in T-nut (page 366), and triple economy slide in T-nut (page 367). The spring holds the fastener in place, even when the profile is in a vertical position. **Additional Information:** Please note that springs are sold in packs of 100.

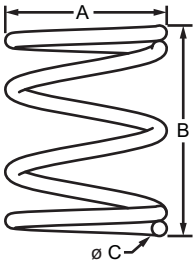

Part No.	Series	Material	Grade	A	B	C	Weight
3010	15 40	Steel	1215	.240"	.313"	.022"	.022 lb

Standard Slide-In T-Nut

Part Description:

The standard slide-in T-nut is a fastening option that loads from the profile ends. It is a strong, durable connection that is available with options in size, thread, and finish. It can be customized up to 36” (91.44cm). For information on 80/20 screw and bolt offerings for the standard slide-in T-nut refer to pages beginning on 387.

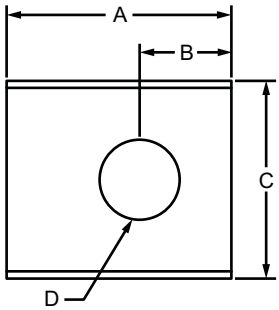

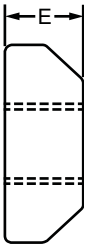

10 Series Standard Slide-In T-Nut

Part No.	Series	Type	Material	Grade	Finish	A	B	C	D (Thread)	E	Weight
3205	10	Standard T-Nut	Steel	1215	Black Zinc	.490”	.200”	.431”	10-32	.171”	.008 lb
3705	10	Standard T-Nut			Bright Zinc	.490”	.200”	.431”	10-32	.171”	.007 lb
3204	10	Standard T-Nut			Black Zinc	.490”	.200”	.431”	1/4-20	.171”	.007 lb
3206	10	Standard T-Nut			Black Zinc	.490”	.200”	.431”	M5 x 0.8	.171”	.008 lb
3871	10	Standard T-Nut			Bright Zinc	.490”	.200”	.431”	M5 x 0.8	.171”	.008 lb
3873	10	Standard T-Nut			Bright Zinc	.490”	.200”	.431”	M6 x 1.0	.171”	.007 lb
8901	10	Custom T-Nut			Mill	Per Your Drawing	Per Your Drawing	.431”	Per Your Drawing	.171”	.019 lb / in.
8901-36	10	T-Nut Profile			Mill	36.000”	Per Your Drawing	.431”	Per Your Drawing	.171”	.684 lb
8901-145	10	T-Nut Profile			Mill	145.000”	Per Your Drawing	.431”	Per Your Drawing	.171”	2.755 lb

15 Series Standard Slide-In T-Nut

Part No.	Series	Type	Material	Grade	Finish	A	B	C	D (Thread)	E	Weight
3201	15	Standard T-Nut	Steel	1215	Black Zinc	.700”	.281”	.625”	10-32	.243”	.025 lb
3202	15	Standard T-Nut			Black Zinc	.700”	.281”	.625”	1/4-20	.243”	.024 lb
3203	15	Standard T-Nut			Black Zinc	.700”	.281”	.625”	5/16-18	.243”	.022 lb
3866	15	Standard T-Nut			Bright Zinc	.700”	.281”	.625”	M6 x 1.0	.243”	.025 lb
3703	15	Standard T-Nut			Bright Zinc	.700”	.281”	.625”	5/16-18	.243”	.022 lb
3868	15	Standard T-Nut			Bright Zinc	.700”	.281”	.625”	M8 x 1.25	.243”	.022 lb
8900	15	Custom T-Nut			Mill	Per Your Drawing	Per Your Drawing	.625”	Per Your Drawing	.243”	.040 lb / in.
8900-36	15	T-Nut Profile			Mill	36.000”	Per Your Drawing	.625”	Per Your Drawing	.243”	1.440 lb
8900-145	15	T-Nut Profile			Mill	145.000”	Per Your Drawing	.625”	Per Your Drawing	.243”	5.800 lb

CONTINUE

25 Series Standard Slide-In T-Nut

Part No.	Series	Type	Material	Grade	Finish	A	B	C	D (Thread)	E	Weight
25-3206	25	Standard T-Nut	Steel	1215	Bright Zinc	12.45mm	5.08mm	10.95mm	M5 x 0.8	4.34mm	.0036 kg
25-1954	25	Standard T-Nut			Bright Zinc	12.45mm	5.08mm	10.95mm	M5 x 0.8	4.34mm	.0041 kg
25-1964	25	Standard T-Nut			Bright Zinc	12.45mm	5.08mm	10.95mm	M6 x 1.0	4.34mm	.0036 kg
25-3204	25	Standard T-Nut			Black Zinc	12.45mm	5.08mm	10.95mm	1/4-20	4.34mm	.0032 kg
25-8901	25	Custom T-Nut			Mill	Per Your Drawing	Per Your Drawing	10.95mm	Per Your Drawing	4.34mm	.0004 kg / mm
25-8901-914	25	T-Nut Profile			Mill	914.00mm	Per Your Drawing	10.95mm	Per Your Drawing	4.34mm	.2742 kg
25-8901-3683	25	T-Nut Profile			Mill	3683.00mm	Per Your Drawing	10.95mm	Per Your Drawing	4.34mm	1.1049 kg

40 Series Standard Slide-In T-Nut

Part No.	Series	Type	Material	Grade	Finish	A	B	C	D (Thread)	E	Weight
40-1964	40	Standard T-Nut	Steel	1215	Bright Zinc	17.45mm	7.14mm	15.88mm	M6 x 1.0	6.35mm	.0113 kg
40-1984	40	Standard T-Nut			Bright Zinc	17.45mm	7.14mm	15.88mm	M8 x 1.25	6.35mm	.0100 kg
40-3202	40	Standard T-Nut			Black Zinc	17.45mm	7.14mm	15.88mm	1/4-20	6.35mm	.0109 kg
40-3203	40	Standard T-Nut			Black Zinc	17.45mm	7.14mm	15.88mm	5/16-18	6.35mm	.0104 kg
40-8900	40	Custom T-Nut			Mill	Per Your Drawing	Per Your Drawing	15.88mm	Per Your Drawing	6.35mm	.0007 kg / mm
40-8900-914	40	T-Nut Profile			Mill	914.00mm	Per Your Drawing	15.88mm	Per Your Drawing	6.35mm	.6398 kg
40-8900-3683	40	T-Nut Profile			Mill	3683.00mm	Per Your Drawing	15.88mm	Per Your Drawing	6.35mm	2.5781 kg

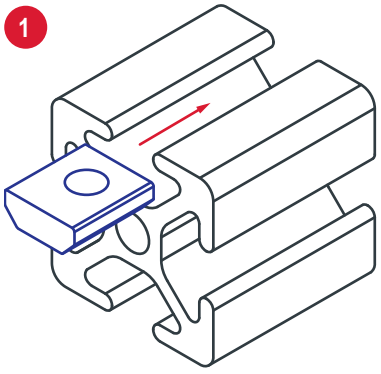

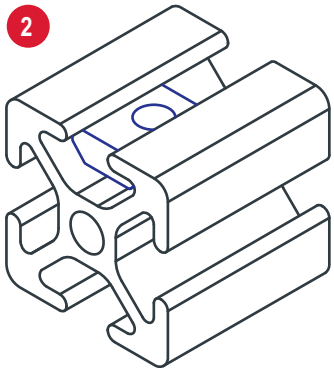

Self-Aligning Slide-In T-Nut with Ball Spring

Part Description:

The self-aligning slide-in T-nut with ball spring is a fastening option that loads from the profile ends. The projection on the T-nut aligns it in the T-slot while the ball spring holds the fastener in place, even when the profile is in a vertical position. It is available with different thread options. For information on 80/20 screw and bolt offerings for the self-aligning slide-in T-nut with ball spring refer to pages beginning on 387.

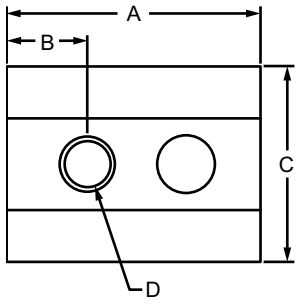

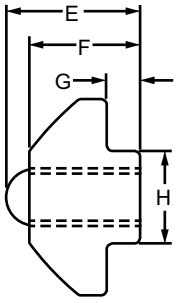

Part No.	Series	Material	Grade	Finish	A	B	C	D (Thread)	E	F	G	H	Weight
13050	15 40	Steel	1045	Bright Zinc	22.00mm	7.00mm	17.00mm	M4 x 0.7	11.60mm	9.60mm	2.90mm	8.00mm	.0181 kg
13051	15 40				22.00mm	7.00mm	17.00mm	M5 x 0.8	11.60mm	9.60mm	2.90mm	8.00mm	.0181 kg
13052	15 40				22.00mm	7.00mm	17.00mm	M6 x 1.0	11.60mm	9.60mm	2.90mm	8.00mm	.0172 kg
13053	15 40				22.00mm	7.00mm	17.00mm	M8 x 1.25	11.60mm	9.60mm	2.90mm	8.00mm	.0159 kg
13054	15 40				22.00mm	7.00mm	17.00mm	1/4-20	11.60mm	9.60mm	2.90mm	8.00mm	.0168 kg
13055	15 40				22.00mm	7.00mm	17.00mm	5/16-18	11.60mm	9.60mm	2.90mm	8.00mm	.0159 kg

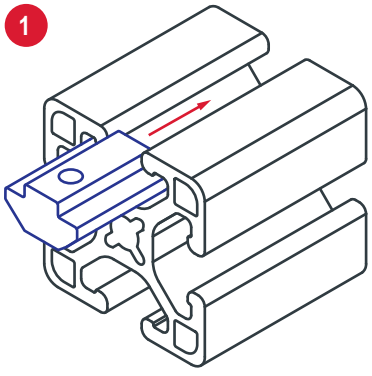

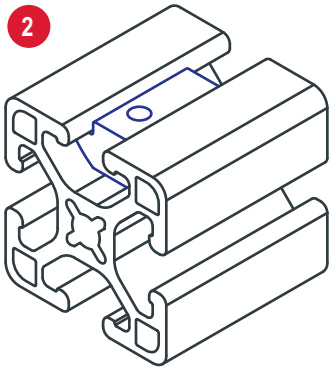

Part Description:

The slide-in T-nut with ball spring is a fastening option that loads from the profile ends. The ball spring holds the T-nut in the T-slot, even when the profile is in a vertical position. It is available with different thread options. For information on 80/20 screw and bolt offerings for the slide-in T-nut with ball spring refer to pages beginning on 387.

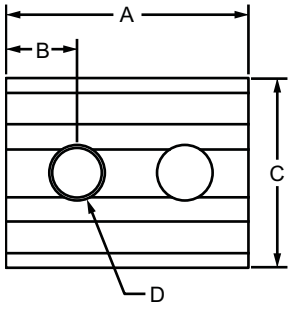

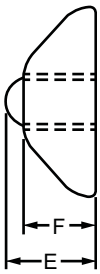

Part No.	Series	Material	Grade	Finish	A	B	C	D (Thread)	E	F	Weight
13064	15 40	Steel	1045	Bright Zinc	23.00mm	6.75mm	18.00mm	M5	8.50mm	6.80mm	.0150 kg
13065	15 40				23.00mm	6.75mm	18.00mm	M6	8.50mm	6.80mm	.0145 kg
13066	15 40				23.00mm	6.75mm	18.00mm	M8	8.50mm	6.80mm	.0132 kg

1

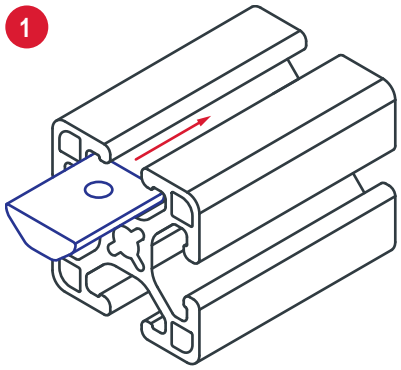

2

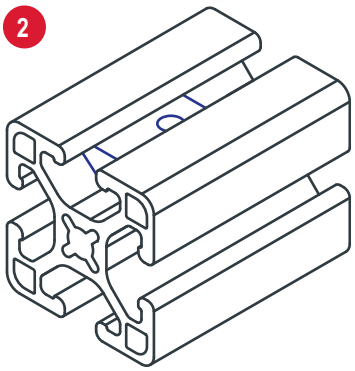

Self-Aligning Slide-In T-Nut

Part Description:

The self-aligning slide-in T-nut is a strong fastening option that loads from the profile ends. The projection on the T-nut aligns it in the T-slot for easy assembly. This fastener is available in a variety of sizes and threads. For information on 80/20 screw and bolt offerings for the self-aligning slide-in T-nut refer to pages beginning on 387.

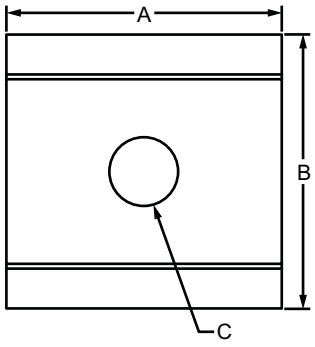

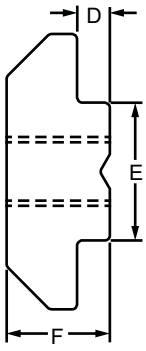

Part No.	Series	Material	Grade	Finish	A	B	C (Thread)	D	E	F	Weight
13022	15 30 40	Steel	1045	Bright Zinc	16.00mm	16.00mm	M4 x 0.7	1.80mm	7.80mm	6.00mm	.0082 kg
13023	15 30 40				16.00mm	16.00mm	M5 x 0.8	1.80mm	7.80mm	6.00mm	.0082 kg
13024	15 30 40				16.00mm	16.00mm	M6 x 1.0	1.80mm	7.80mm	6.00mm	.0077 kg
13025	15 30 40				16.00mm	16.00mm	M8 x 1.25	1.80mm	7.80mm	6.00mm	.0068 kg
13046	45				20.00mm	19.50mm	M4 x 0.7	5.10mm	9.80mm	10.60mm	.0214 kg
13047	45				20.00mm	19.50mm	M5 x 0.8	5.10mm	9.80mm	10.60mm	.0204 kg
13048	45				20.00mm	19.50mm	M6 x 1.0	5.10mm	9.80mm	10.60mm	.0200 kg
13049	45				20.00mm	19.50mm	M8 x 1.25	5.10mm	9.80mm	10.60mm	.0177 kg

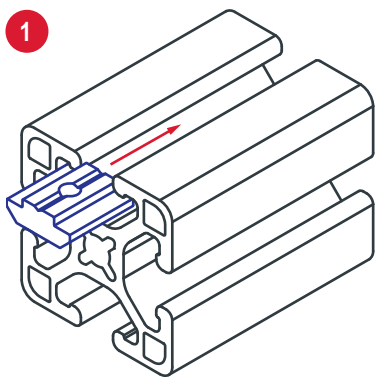

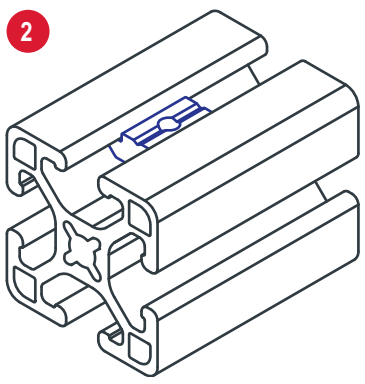

Part Description:

The slide-in economy T-nut block is a fastening option that loads from the profile ends. It is the most cost-effective slide-in T-nut and also provides infinite positioning along the profile T-slot. This fastener is available in a variety of sizes and threads. For information on 80/20 screw and bolt offerings for the slide-in economy T-nut block refer to pages beginning on 387.

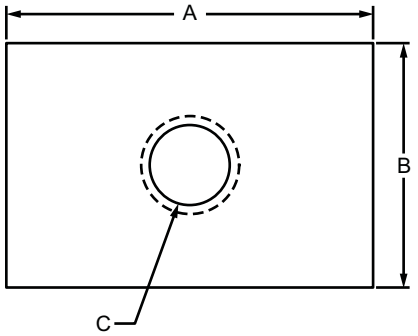

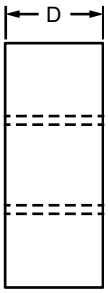

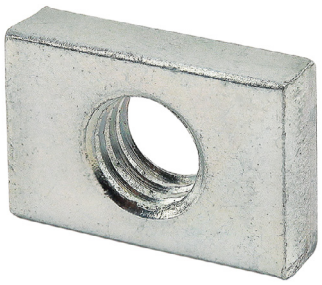

Part No.	Series	Material	Grade	Finish	Process	Color	A	B	C (Thread)	D	Weight
14124	10 25	Steel	ST50	Bright Zinc	Stamped	Silver	15.00mm	10.00mm	M6 x 1.0	4.00mm	.0036 kg
14126	15 40 45						19.00mm	16.00mm	M6 x 1.0	4.00mm	.0082 kg
14127	15 40 45						19.00mm	16.00mm	M8 x 1.25	4.00mm	.0073 kg
14130	15 40 45						20.00mm	13.00mm	M6 x 1.0	5.00mm	.0084 kg
14131	15 40 45						20.00mm	13.00mm	M8 x 1.25	5.00mm	.0082 kg
14159	20						9.00mm	9.00mm	M4 x 0.7	3.00mm	.0014 kg
14122	20						9.00mm	9.00mm	M5 x 0.8	3.00mm	.0014 kg
14125	45						15.00mm	10.00mm	M6 x 1.0	5.00mm	.0047 kg
14128	45						19.00mm	19.00mm	M6 x 1.0	4.00mm	.0099 kg
14129	45						19.00mm	19.00mm	M8 x 1.25	4.00mm	.0095 kg

1

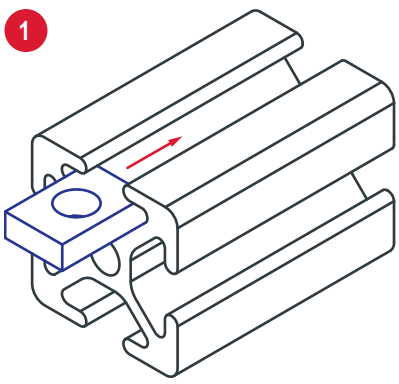

2

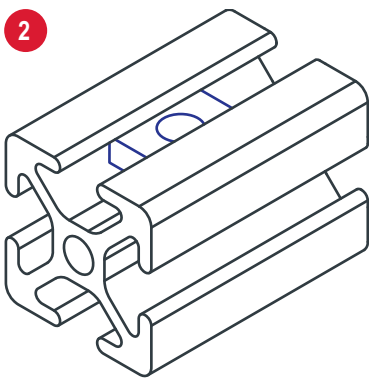

FASTENERS

Roll-In T-Nut with Flex Handle

Part Description:

The roll-in T-nut with flex handle is a fastening option that loads from either the profile ends or side, which is helpful in applications where the ends are inaccessible. The flex handle sticks out past the profile to make it easy to position and move within the T-slot. It is available with options in size, material, thread, and finish. For information on 80/20 screw and bolt offerings for the roll-in T-nut with flex handle refer to pages beginning on 387.

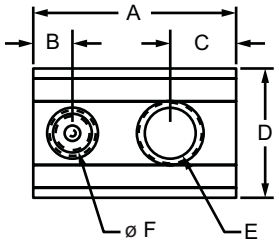

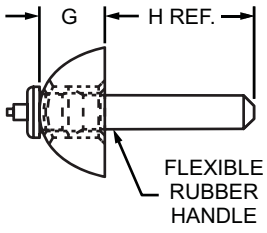

Part No.	Series	Material	Grade	Finish	A	B	C	D	E (Thread)	F	G	H	Weight
3375	10	Steel	1215	Black Zinc	.620"	.120"	.201"	.395"	10-32	.116"	.200"	.456"	.008 lb
3790	10	Steel	1215	Bright Zinc	.620"	.120"	.201"	.395"	10-32	.116"	.200"	.456"	.008 lb
3376	10	Steel	1215	Black Zinc	.620"	.120"	.201"	.395"	1/4-20	.116"	.200"	.456"	.008 lb
3624	10	Stainless-Steel	303 Stainless	Stainless	.620"	.120"	.201"	.395"	1/4-20	.116"	.200"	.456"	.008 lb
3791	10	Steel	1215	Bright Zinc	.620"	.120"	.201"	.395"	1/4-20	.116"	.200"	.456"	.008 lb
3875	10	Steel	1215	Bright Zinc	.620"	.120"	.201"	.395"	M5 x 0.8	.116"	.200"	.456"	.007 lb
3876	10	Steel	1215	Bright Zinc	.620"	.120"	.201"	.395"	M6 x 1.0	.116"	.200"	.456"	.008 lb
3284	15	Steel	1215	Black Zinc	.875"	.195"	.310"	.510"	10-32	.116"	.285"	.391"	.023 lb
3784	15	Steel	1215	Bright Zinc	.875"	.195"	.310"	.510"	10-32	.116"	.285"	.391"	.021 lb
3844	15	Steel	1215	Bright Zinc	.875"	.195"	.310"	.510"	M5 x 0.8	.116"	.285"	.391"	.025 lb
3283	15	Steel	1215	Black Zinc	.875"	.195"	.310"	.510"	1/4-20	.116"	.285"	.391"	.024 lb
3783	15	Steel	1215	Bright Zinc	.875"	.195"	.310"	.510"	1/4-20	.116"	.285"	.391"	.023 lb
3843	15	Steel	1215	Bright Zinc	.875"	.195"	.310"	.510"	M6 x 1.0	.116"	.285"	.391"	.023 lb
3282	15	Steel	1215	Black Zinc	.875"	.195"	.310"	.510"	5/16-18	.116"	.285"	.391"	.022 lb
3782	15	Steel	1215	Bright Zinc	.875"	.195"	.310"	.510"	5/16-18	.116"	.285"	.391"	.022 lb
3842	15	Steel	1215	Bright Zinc	.875"	.195"	.310"	.510"	M8 x 1.25	.116"	.285"	.391"	.022 lb
3602	15	Stainless-Steel	303 Stainless	Stainless	.875"	.195"	.310"	.510"	1/4-20	.116"	.285"	.391"	.023 lb
3600	15	Stainless-Steel	303 Stainless	Stainless	.875"	.195"	.310"	.510"	5/16-18	.116"	.285"	.391"	.021 lb
25-1956	25	Steel	1215	Bright Zinc	15.75mm	3.05mm	5.11mm	10.03mm	M5 x 0.8	2.95mm	5.08mm	11.58mm	.0041 kg
25-1966	25	Steel	1215	Bright Zinc	15.75mm	3.05mm	5.11mm	10.03mm	M6 x 1.0	2.95mm	5.08mm	11.58mm	.0036 kg
25-3376	25	Steel	1215	Black Zinc	15.75mm	3.05mm	5.11mm	10.03mm	1/4-20	2.95mm	5.08mm	11.58mm	.0036 kg
40-1966	40	Steel	1215	Bright Zinc	22.22mm	4.95mm	7.87mm	12.70mm	M6 x 1.0	2.95mm	7.24mm	9.93mm	.0104 kg
40-1986	40	Steel	1215	Bright Zinc	22.22mm	4.95mm	7.87mm	12.70mm	M8 x 1.25	2.95mm	7.24mm	9.93mm	.0118 kg
40-3282	40	Steel	1215	Black Zinc	22.22mm	4.95mm	7.87mm	12.70mm	5/16-18	2.95mm	7.24mm	9.93mm	.0100 kg
40-3283	40	Steel	1215	Black Zinc	22.22mm	4.95mm	7.87mm	12.70mm	1/4-20	2.95mm	7.24mm	9.93mm	.0109 kg

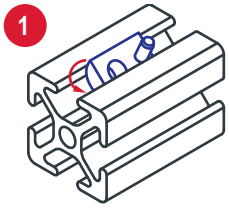

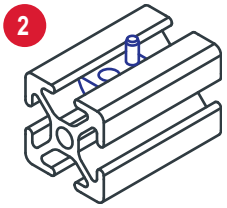

Part Description:

The roll-in T-nut with set screw is a fastening option that loads from either the profile ends or side, which is helpful in applications where the ends are inaccessible. When the set screw is engaged it keeps the T-nut in place in the T-slot, even if the profile is in a vertical position, simplifying the assembly process. It is available with options in size, material, thread, and finish. For information on 80/20 screw and bolt offerings for the roll-in T-nut with set screw refer to pages beginning on 387. **Tip:** An “L” wrench or combo tool (pg. 908-909) is required for adjusting the set screw.

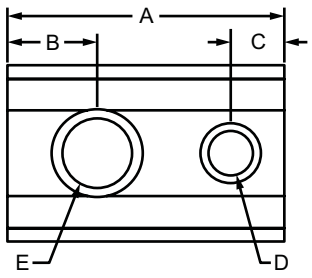

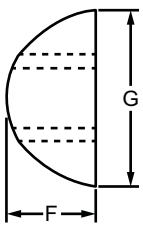

Part No.	Series	Material	Grade	Finish	A	B	C	D (Set Screw)	E (Thread)	F	G	Weight
3312	10	Steel	1215	Black Zinc	.620”	.201”	.120”	6-32	10-32	.200”	.395”	.009 lb
3313	10	Steel	1215	Black Zinc	.620”	.201”	.120”	6-32	1/4-20	.200”	.395”	.008 lb
3309	15	Steel	1215	Black Zinc	.875”	.310”	.195”	10-24	10-32	.285”	.510”	.024 lb
3310	15	Steel	1215	Black Zinc	.875”	.310”	.195”	10-24	1/4-20	.285”	.510”	.024 lb
3311	15	Steel	1215	Black Zinc	.875”	.310”	.195”	10-24	5/16-18	.285”	.510”	.020 lb
3605	15	Stainless-Steel	303 Stainless	Stainless	.875”	.310”	.195”	10-32	1/4-20	.285”	.510”	.023 lb
3608	15	Stainless-Steel	303 Stainless	Stainless	.875”	.310”	.195”	10-32	5/16-18	.285”	.510”	.021 lb
3781	15	Steel	1215	Bright Zinc	.875”	.310”	.195”	10-24	10-32	.285”	.510”	.023 lb
3787	15	Steel	1215	Bright Zinc	.875”	.310”	.195”	10-24	1/4-20	.285”	.510”	.024 lb
3788	15	Steel	1215	Bright Zinc	.875”	.310”	.195”	10-24	5/16-18	.285”	.510”	.020 lb
3892	15	Steel	1215	Bright Zinc	.875”	.310”	.195”	M5 x 0.8	M5 x 0.8	.285”	.510”	.023 lb
3894	15	Steel	1215	Bright Zinc	.875”	.310”	.195”	M5 x 0.8	M8 x 1.25	.285”	.510”	.020 lb
3898	15	Steel	1215	Bright Zinc	.310”	.875”	.195”	M5 x 0.8	M6 x 1.0	.285”	.510”	.023 lb
25-3312	25	Steel	1215	Black Zinc	15.75mm	5.11mm	3.05mm	6-32	10-32	5.08mm	10.03mm	.0041 kg
25-3313	25	Steel	1215	Black Zinc	15.75mm	5.11mm	3.05mm	6-32	1/4-20	5.08mm	10.03mm	.0036 kg
40-1968	40	Steel	1215	Bright Zinc	22.22mm	7.87mm	4.95mm	10-24	M6 x 1.0	7.24mm	12.95mm	.0109 kg
40-1988	40	Steel	1215	Bright Zinc	22.22mm	7.87mm	4.95mm	10-24	M8 x 1.25	7.24mm	12.95mm	.0095 kg
40-3310	40	Steel	1215	Black Zinc	22.22mm	7.87mm	4.95mm	10-24	1/4-20	7.24mm	12.95mm	.0104 kg
40-3311	40	Steel	1215	Black Zinc	22.22mm	7.87mm	4.95mm	10-24	5/16-18	7.24mm	12.95mm	.0100 kg

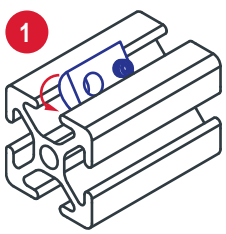

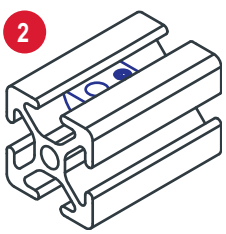

Roll-In T-Nut with Ball Spring

Part Description:

The roll-in T-nut with ball spring is a fastening option that loads from the profile ends or side, which is helpful for applications where the ends are inaccessible. The ball spring holds the T-nut in the T-slot, even when the profile is in a vertical position, simplifying the assembly process. It is available with options in size, material, thread, and finish. For information on 80/20 screw and bolt offerings for the roll-in T-nut with ball spring refer to pages beginning on 387.

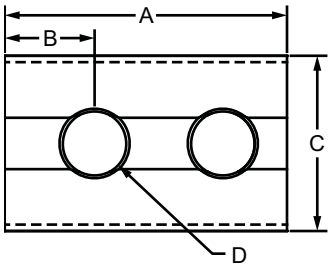

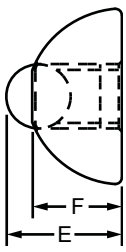

Part No.	Series	Material	Grade	Finish	A	B	C	D (Thread)	E	F	Weight
3919	10	Steel	1045	Bright Zinc	.630"	.213"	.386"	M4 x 0.7	.253"	.203"	.009 lb
3920	10	Steel	1045	Bright Zinc	.630"	.213"	.386"	M5 x 0.8	.253"	.203"	.009 lb
3921	10	Steel	1045	Bright Zinc	.630"	.213"	.386"	M6 x 1.0	.253"	.203"	.008 lb
3922	10	Steel	1045	Bright Zinc	.630"	.213"	.386"	10-32	.253"	.203"	.008 lb
3923	10	Steel	1045	Bright Zinc	.630"	.213"	.386"	1/4-20	.253"	.203"	.008 lb
3666	10	Stainless-Steel	304 Stainless	Stainless	.630"	.213"	.386"	M4 x 0.7	.253"	.203"	.008 lb
3667	10	Stainless-Steel	304 Stainless	Stainless	.630"	.213"	.386"	M5 x 0.8	.253"	.203"	.009 lb
3668	10	Stainless-Steel	304 Stainless	Stainless	.630"	.213"	.386"	M6 x 1.0	.253"	.203"	.008 lb
3669	10	Stainless-Steel	304 Stainless	Stainless	.630"	.213"	.386"	10-32	.253"	.203"	.009 lb
3670	10	Stainless-Steel	304 Stainless	Stainless	.630"	.213"	.386"	1/4-20	.253"	.203"	.009 lb
3913	15	Steel	1045	Bright Zinc	.866"	.234"	.539"	M5 x 0.8	.343"	.276"	.023 lb
3914	15	Steel	1045	Bright Zinc	.866"	.234"	.539"	M6 x 1.0	.343"	.276"	.022 lb
3915	15	Steel	1045	Bright Zinc	.866"	.234"	.539"	M8 x 1.25	.343"	.276"	.021 lb
3916	15	Steel	1045	Bright Zinc	.866"	.234"	.539"	1/4-20	.343"	.276"	.022 lb
3917	15	Steel	1045	Bright Zinc	.866"	.234"	.539"	5/16-18	.343"	.276"	.022 lb
13018	15 40	Stainless-Steel	304 Stainless	Stainless	22.00mm	6.50mm	13.70mm	1/4-20	8.70mm	7.00mm	.0095 kg
13021	15 40	Stainless-Steel	304 Stainless	Stainless	22.00mm	6.50mm	13.70mm	5/16-18	8.70mm	7.00mm	.0091 kg
40-3913	40	Steel	1045	Bright Zinc	22.00mm	5.90mm	13.70mm	M5 x 0.8	8.70mm	7.00mm	.0100 kg
40-3914	40	Steel	1045	Bright Zinc	22.00mm	5.90mm	13.70mm	M6 x 1.0	8.70mm	7.00mm	.0100 kg
40-3915	40	Steel	1045	Bright Zinc	22.00mm	5.90mm	13.70mm	M8 x 1.25	8.70mm	7.00mm	.0091 kg

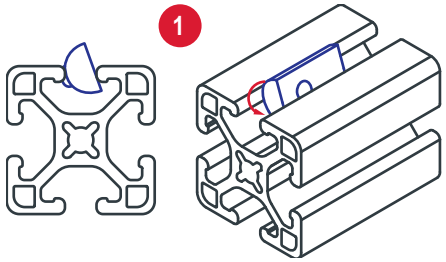

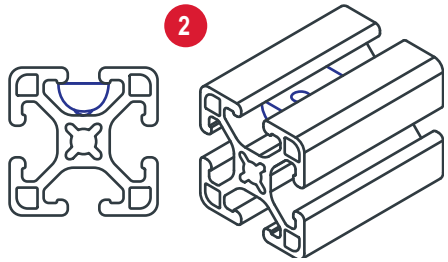

Part Description:

The self-aligning roll-in T-nut with ball spring is a fastening option that loads either from the profile ends or side, which is helpful for applications where the ends are inaccessible. The projection on the T-nut aligns it in the T-slot while the ball spring holds the fastener in place, even when the profile is in a vertical position. It is available with options in size, material, thread, and finish. For information on 80/20 screw and bolt offerings for the self-aligning roll-in T-nut with ball spring refer to pages beginning on 387.

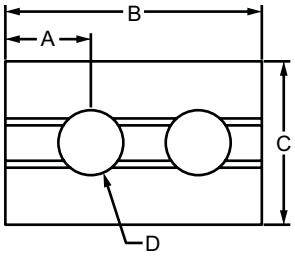

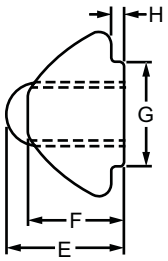

Part No.	Series	Material	Grade	Finish	A	B	C	D (Thread)	E	F	G	H	Weight
13082	20	Steel	1045	Bright Zinc	3.80mm	12.00mm	7.70mm	M3 x 0.5	5.50mm	4.50mm	5.00mm	0.60mm	.0018 kg
13083	20	Steel	1045	Bright Zinc	3.80mm	12.00mm	7.70mm	M4 x 0.7	5.50mm	4.50mm	5.00mm	0.60mm	.0018 kg
13084	20	Steel	1045	Bright Zinc	3.80mm	12.00mm	7.70mm	M5 x 0.8	5.50mm	4.50mm	5.00mm	0.60mm	.0018 kg
13027	15 40	Steel	1045	Bright Zinc	6.70mm	22.00mm	13.50mm	M4 x 0.7	8.90mm	7.20mm	7.80mm	0.80mm	.0109 kg
13028	15 40	Steel	1045	Bright Zinc	6.70mm	22.00mm	13.50mm	M5 x 0.8	8.90mm	7.20mm	7.80mm	0.80mm	.0104 kg
13031	15 40	Steel	1045	Bright Zinc	6.70mm	22.00mm	13.50mm	M6 x 1.0	8.90mm	7.20mm	7.80mm	0.80mm	.0100 kg
13034	15 40	Steel	1045	Bright Zinc	6.70mm	22.00mm	13.50mm	M8 x 1.25	8.90mm	7.20mm	7.80mm	0.80mm	.0086 kg
13039	15 40	Steel	1045	Bright Zinc	6.70mm	22.00mm	13.50mm	10-32	8.90mm	7.20mm	7.80mm	0.80mm	.0104 kg
13037	15 40	Steel	1045	Bright Zinc	6.70mm	22.00mm	13.50mm	1/4-20	8.90mm	7.20mm	7.80mm	0.80mm	.0099 kg
13040	15 40	Steel	1045	Bright Zinc	6.70mm	22.00mm	13.50mm	5/16-18	8.90mm	7.20mm	7.80mm	0.80mm	.0091 kg
13029	15 40	Stainless-Steel	304 Stainless	Stainless	6.70mm	22.00mm	13.50mm	M5 x 0.8	8.90mm	7.20mm	7.80mm	0.80mm	.0104 kg
13032	15 40	Stainless-Steel	304 Stainless	Stainless	6.70mm	22.00mm	13.50mm	M6 x 1.0	8.90mm	7.20mm	7.80mm	0.80mm	.0099 kg
13035	15 40	Stainless-Steel	304 Stainless	Stainless	6.70mm	22.00mm	13.50mm	M8 x 1.25	8.90mm	7.20mm	7.80mm	0.80mm	.0086 kg

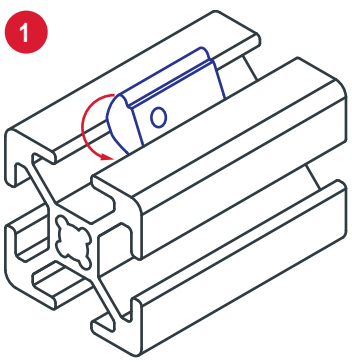

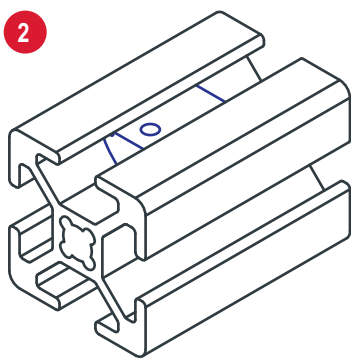

Self-Aligning Roll-In T-Nut

Part Description:

The self-aligning roll-in T-nut is a fastening option that loads either from the profile ends or side, which is helpful for applications where the ends are inaccessible. The projection on the T-nut aligns it in the T-slot for easy assembly. This fastening option provides infinite positioning along the T-slot and is available with options in size and thread. For information on 80/20 screw and bolt offerings for the self-aligning roll-in T-nut refer to pages beginning on 387.

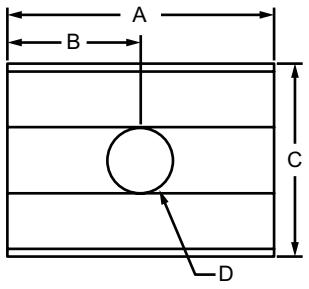

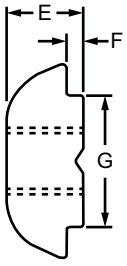

Part No.	Series	Material	Grade	Finish	A	B	C	D (Thread)	E	F	G	Weight
13088	15 30 40	Steel	Q235	Bright Zinc	16.00mm	8.00mm	11.80mm	M4 x 0.7	4.80mm	1.00mm	8.00mm	.0050 kg
13090	15 30 40				16.00mm	8.00mm	11.80mm	M5 x 0.8	4.80mm	1.00mm	8.00mm	.0048 kg
13092	15 30 40				16.00mm	8.00mm	11.80mm	M6 x 1.0	4.80mm	1.00mm	8.00mm	.0045 kg
13094	15 30 40				16.00mm	8.00mm	11.80mm	M8 x 1.25	4.80mm	1.00mm	8.00mm	.0036 kg
13096	15 30 40				16.00mm	8.00mm	11.80mm	1/4-20	4.80mm	1.00mm	8.00mm	.0045 kg
13098	15 30 40				16.00mm	8.00mm	11.80mm	5/16-18	4.80mm	1.00mm	8.00mm	.0036 kg
13058	45				20.00mm	10.00mm	15.00mm	M5 x 0.8	6.00mm	2.00mm	9.80mm	.0100 kg
13060	45				20.00mm	10.00mm	15.00mm	M6 x 1.0	6.00mm	2.00mm	9.80mm	.0095 kg
13062	45				20.00mm	10.00mm	15.00mm	M8 x 1.25	6.00mm	2.00mm	9.80mm	.0082 kg

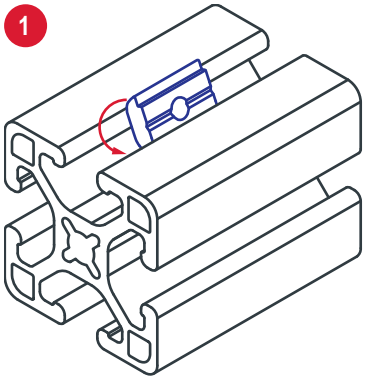

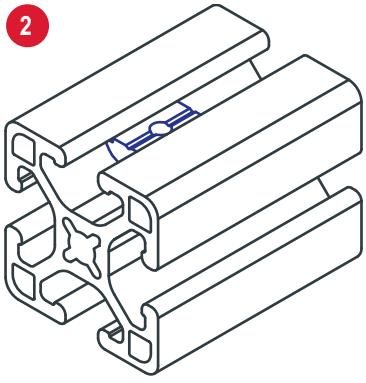

Tall Self-Aligning Roll-In T-Nut with Spring Leaf

Part Description:

The tall self-aligning roll-in T-nut with spring leaf is a fastening option that loads either from the profile ends or side, which is helpful for applications where the ends are inaccessible. The projection on the T-nut aligns it in the T-slot while the spring leaf holds the fastener in place, even when the profile is in a vertical position. It is a strong and durable connection method that is available with different thread options. For information on 80/20 screw and bolt offerings for the tall self-aligning roll-in T-nut with spring leaf refer to pages beginning on 387.

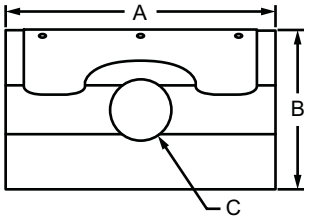

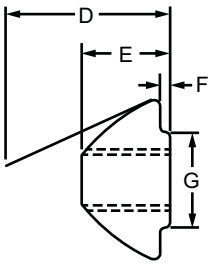

Part No.	Series	Material	Grade	Finish	A	B	C (Thread)	D	E	F	G	Weight
13030	15 40	Steel	1045	Bright Zinc	22.00mm	13.00mm	M5 x 0.8	13.40mm	7.19mm	0.79mm	7.80mm	.0113 kg
13033	15 40				22.00mm	13.00mm	M6 x 1.0	13.40mm	7.19mm	0.79mm	7.80mm	.0109 kg
13036	15 40				22.00mm	13.00mm	M8 x 1.25	13.40mm	7.19mm	0.79mm	7.80mm	.0095 kg
13038	15 40				22.00mm	13.00mm	1/4-20	13.40mm	7.19mm	0.79mm	7.80mm	.0109 kg
13041	15 40				22.00mm	13.00mm	5/16-18	13.40mm	7.19mm	0.79mm	7.80mm	.0100 kg

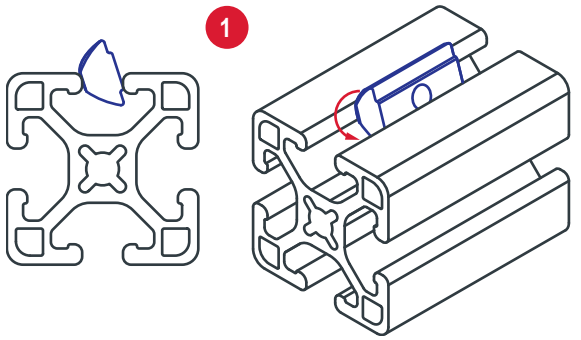

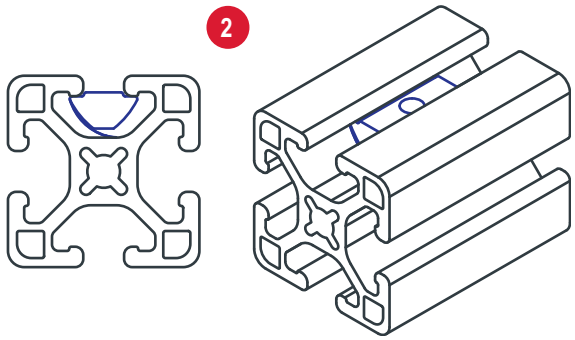

Short Self-Aligning Roll-In T-Nut with Spring Leaf

Part Description:

The short self-aligning roll-in T-nut with spring leaf is a fastening option that loads either from the profile ends or side, which is helpful in applications where the ends are inaccessible. The projection on the T-nut aligns it in the T-slot while the spring leaf holds the fastener in place, even when the profile is in a vertical position. It is available with options in size and thread. For information on 80/20 screw and bolt offerings for the short self-aligning roll-in T-nut with spring leaf refer to pages beginning on 387.

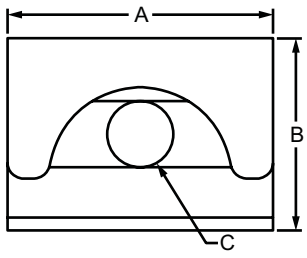

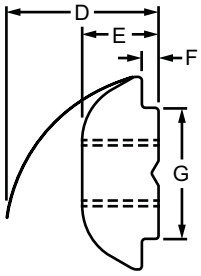

Part No.	Series	Material	Grade	Finish	A	B	C (Thread)	D	E	F	G	Weight
13089	15 30 40	Steel	Q235	Bright Zinc	16.00mm	11.80mm	M4 x 0.7	9.30mm	4.80mm	1.00mm	8.00mm	.0050 kg
13091	15 30 40				16.00mm	11.80mm	M5 x 0.8	9.30mm	4.80mm	1.00mm	8.00mm	.0050 kg
13093	15 30 40				16.00mm	11.80mm	M6 x 1.0	9.30mm	4.80mm	1.00mm	8.00mm	.0045 kg
13095	15 30 40				16.00mm	11.80mm	M8 x 1.25	9.30mm	4.80mm	1.00mm	8.00mm	.0041 kg
13059	45				20.00mm	15.00mm	M5 x 0.8	13.65mm	6.00mm	1.50mm	10.00mm	.0100 kg
13061	45				20.00mm	15.00mm	M6 x 1.0	13.65mm	6.00mm	1.50mm	10.00mm	.0095 kg
13063	45				20.00mm	15.00mm	M8 x 1.25	13.65mm	6.00mm	1.50mm	10.00mm	.0086 kg

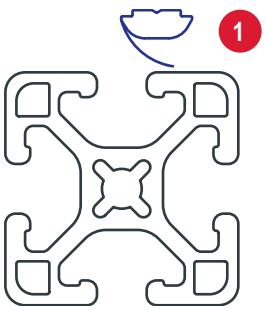

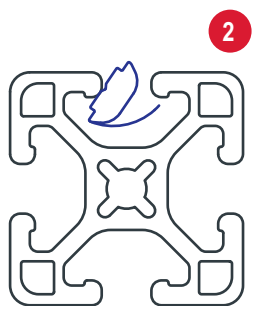

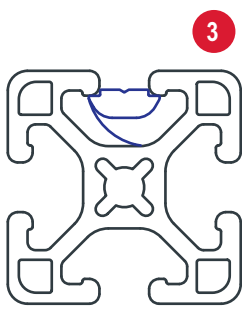

Part Description:

The economy drop-in T-nut is a fastening option that loads either from the profile ends or side, which is helpful for applications where the ends are inaccessible. It is a cost-effective fastener that provides infinite positioning along the profile T-slot and is available in an option of threads. For information on 80/20 screw and bolt offerings for the economy drop-in T-nut refer to pages beginning on 387.

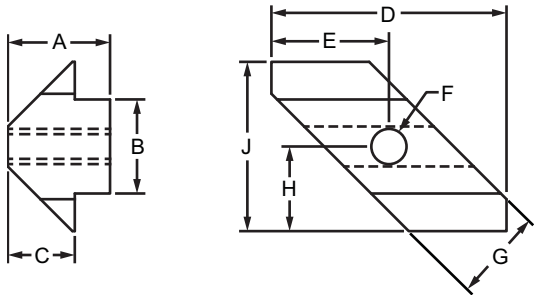

Part No.	Series	Material	Grade	Finish	A	B	C	D	E	F (Thread)	G	H	J	Weight
13179	15 40	Zinc	Die-Cast	Bright Zinc	8.70mm	8.00mm	5.70mm	20.00mm	10.00mm	M3 x 0.5	7.80mm	10.00mm	20.00mm	.0050 kg
13180	15 40				8.70mm	8.00mm	5.70mm	20.00mm	10.00mm	M4 x 0.6	7.80mm	10.00mm	20.00mm	.0050 kg
13181	15 40				8.70mm	8.00mm	5.70mm	20.00mm	10.00mm	M5 x 0.8	7.80mm	10.00mm	20.00mm	.0045 kg
13182	15 40				8.70mm	8.00mm	5.70mm	20.00mm	10.00mm	M6 x 1.0	7.80mm	10.00mm	20.00mm	.0041 kg
14161	15 40				8.70mm	8.00mm	5.70mm	20.00mm	10.00mm	1/4-20	7.80mm	10.00mm	20.00mm	.0041 kg

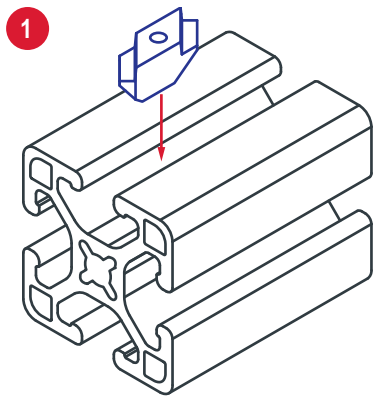

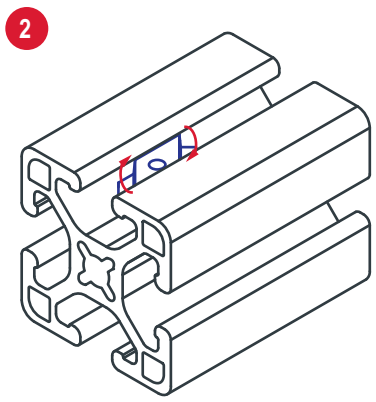

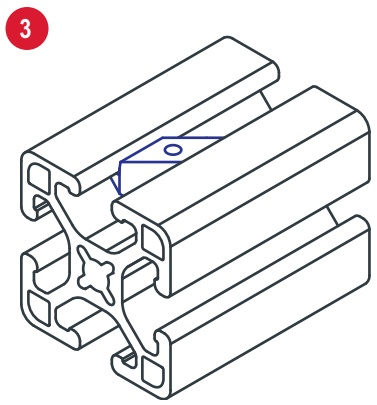

Standard Drop-In T-Nut

Part Description:

The standard drop-in T-nut is a fastening option that loads either from the profile ends or side, which is helpful for applications where the ends are inaccessible. It has ridges that bite into the profile surface, creating a strong connection. The standard drop-in T-nut is available with options in size, material, thread, and finish. For information on 80/20 screw and bolt offerings refer to pages beginning on 387.

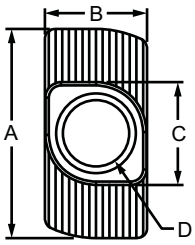

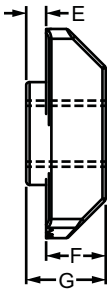

10 & 25 Series Standard Drop-In T-Nut

Part No.	Series	Material	Finish	A	B	C	D (Thread)	E	F	G	Weight
14162	10 25	Steel	Bright Zinc	11.50mm	5.70mm	5.70mm	10-32	1.00mm	3.20mm	4.20mm	.0014 kg
14164	10 25			11.50mm	5.80mm	5.70mm	M4 x 0.7	1.00mm	3.20mm	4.20mm	.0014 kg
14166	10 25	Stainless-Steel	Stainless	11.50mm	5.70mm	5.70mm	M4 x 0.7	1.00mm	3.20mm	4.20mm	.0014 kg

15 & 40 Series Standard Drop-In T-Nut

Part No.	Series	Material	Finish	A	B	C	D (Thread)	E	F	G	Weight
3930	15 40	Steel	Bright Zinc	.620"	.305"	.308"	M5 x 0.8	.059"	.180"	.239"	.007 lb
3931	15 40		Bright Zinc	.620"	.305"	.308"	M6 x 1.0	.059"	.180"	.239"	.006 lb
3932	15 40		Bright Zinc	.620"	.305"	.308"	10-32	.059"	.180"	.239"	.007 lb
3933	15 40		Bright Zinc	.620"	.305"	.308"	1/4-20	.059"	.180"	.239"	.007 lb
13116	15 40		Bright Zinc	16.00mm	7.90mm	7.90mm	M5 x 0.8	3.00mm	4.70mm	7.70mm	.0041 kg
13119	15 40		Bright Zinc	16.00mm	7.90mm	7.90mm	M6 x 1.0	3.00mm	4.70mm	7.70mm	.0037 kg
14165	15 40		Bright Zinc	16.00mm	7.90mm	7.90mm	1/4-20	3.00mm	4.70mm	7.70mm	.0036 kg

30 Series Standard Drop-In T-Nut

Part No.	Series	Material	Finish	A	B	C	D (Thread)	E	F	G	Weight
13118	30	Stainless-Steel	Stainless	16.00mm	8.00mm	8.00mm	M6 x 1.0	1.50mm	4.50mm	6.00mm	.0036 kg
13111	30	Stainless-Steel	Stainless	15.80mm	7.90mm	7.70mm	1/4-20	1.50mm	4.50mm	6.00mm	.0027 kg
13113	30	Steel	Bright Zinc	16.00mm	8.00mm	8.00mm	M4 x 0.7	1.50mm	4.50mm	6.00mm	.0041 kg
13115	30	Steel	Bright Zinc	16.00mm	8.00mm	8.00mm	M5 x 0.8	1.50mm	4.50mm	6.00mm	.0034 kg
13117	30	Steel	Bright Zinc	16.00mm	8.00mm	8.00mm	M6 x 1.0	1.50mm	4.50mm	6.00mm	.0032 kg
13112	30	Steel	Bright Zinc	16.00mm	8.00mm	7.80mm	10-32	1.70mm	4.70mm	6.40mm	.0036 kg
13110	30	Steel	Bright Zinc	16.00mm	8.00mm	8.00mm	1/4-20	1.50mm	4.50mm	6.00mm	.0032 kg

CONTINUE

45 Series Standard Drop-In T-Nut

Part No.	Series	Material	Finish	A	B	C	D (Thread)	E	F	G	Weight
13123	45	Steel	Bright Zinc	19.60mm	9.80mm	9.90mm	M4 x 0.7	3.00mm	5.50mm	8.50mm	.0077 kg
13127	45			19.60mm	9.80mm	9.90mm	M5 x 0.8	3.00mm	5.50mm	8.50mm	.0073 kg
13129	45			19.60mm	10.00mm	10.00mm	M6 x 1.0	3.00mm	5.70mm	8.70mm	.0068 kg
13132	45			19.60mm	10.00mm	10.00mm	M8 x 1.25	3.00mm	5.70mm	8.70mm	.0054 kg
13122	45			19.60mm	9.70mm	9.90mm	10-32	3.00mm	5.70mm	8.70mm	.0075 kg
13120	45			19.60mm	9.70mm	9.90mm	1/4-20	3.00mm	5.70mm	8.70mm	.0068 kg
13124	45			19.60mm	9.70mm	9.90mm	5/16-18	3.00mm	5.70mm	8.70mm	.0059 kg
13130	45	Stainless-Steel	Stainless	19.60mm	9.90mm	9.90mm	M6 x 1.0	3.00mm	5.70mm	8.70mm	.0098 kg
13133	45			19.60mm	9.90mm	9.90mm	M8 x 1.25	3.00mm	5.70mm	8.70mm	.0059 kg
13121	45			19.20mm	9.80mm	9.80mm	1/4-20	3.00mm	5.70mm	8.70mm	.0068 kg
13125	45			19.20mm	9.90mm	9.90mm	5/16-18	3.00mm	5.50mm	8.50mm	.0064 kg

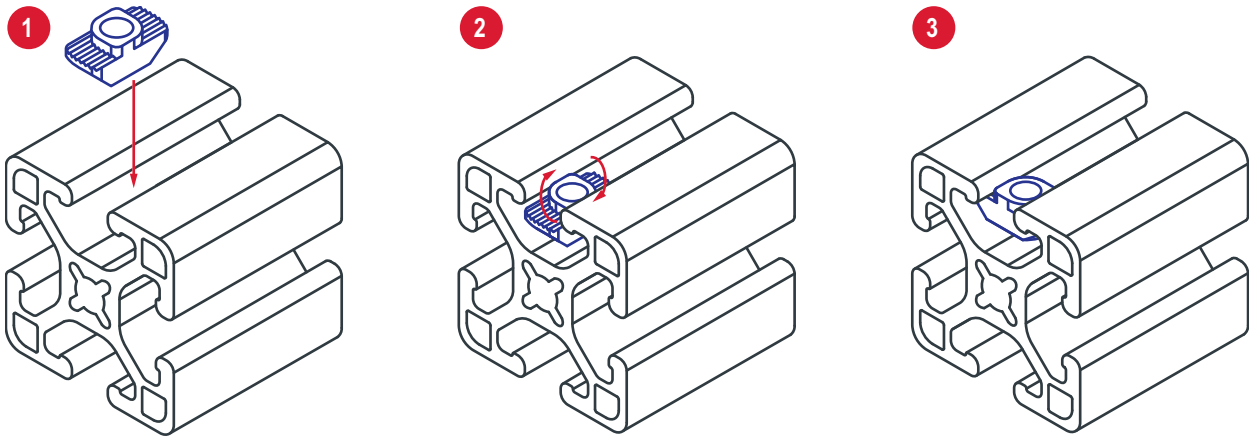

Slide-In T-Nut with Holding Spring

Part Description:

The slide-in T-nut with holding spring is a fastening option that is compatible with the 80/20 metric 45 series and loads from the profile ends. The projection on the T-nut aligns it in the T-slot while the spring holds the fastener in place, even when the profile is in a vertical position. The spring is removable and snaps onto the threaded projection. For information on 80/20 screw and bolt offerings for the slide-in T-nut with holding spring refer to pages beginning on 387.

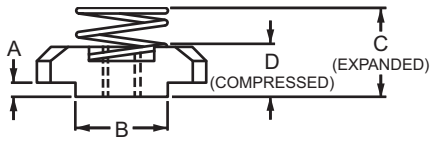

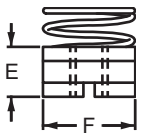

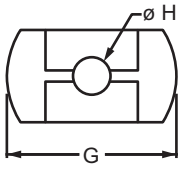

Part No.	Series	Material	Grade	Finish	A	B	C	D	E	F	G	H	Weight
13106	45	Steel	Q235	Bright Zinc	1.50mm	10.00mm	12.00mm	6.00mm	5.30mm	10.00mm	18.00mm	M4 x 0.7	.0048 kg
13107	45				1.50mm	10.00mm	12.00mm	6.00mm	5.30mm	10.00mm	18.00mm	M5 x 0.8	.0045 kg
13108	45				1.50mm	10.00mm	12.00mm	6.00mm	5.30mm	10.00mm	18.00mm	M6 x 1.0	.0043 kg
13109	45				1.50mm	10.00mm	12.00mm	6.00mm	5.30mm	10.00mm	18.00mm	M8 x 1.25	.0036 kg

Part Description:

The double anchor slide-in T-nut is used with a double anchor fastener. It loads from the profile end and is a strong, durable connection. There are options available in size, thread, and finish. **Important:** The double anchor slide-in T-nut can only be used with a double anchor fastener. See page 215 for information on the double anchor fastener.

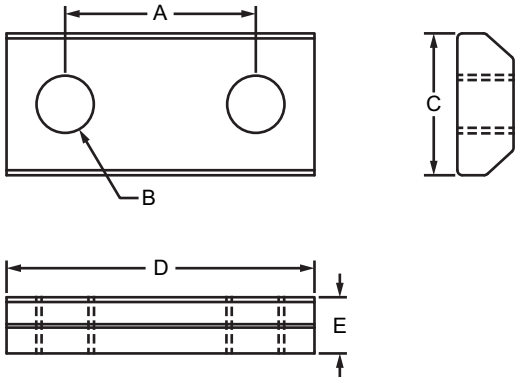

Part No.	Series	Material	Grade	Finish	A	B (Thread)	C	D	E	Weight
3085	10	Steel	1215	Black Zinc	.580"	10-32	.431"	.936"	.171"	.015 lb
3086	10			Black Zinc	1.580"	10-32	.431"	1.936"	.171"	.038 lb
3903	10			Bright Zinc	.565"	M5 x 0.8	.431"	.937"	.171"	.016 lb
3906	10			Bright Zinc	1.566"	M5 x 0.8	.431"	1.937"	.171"	.034 lb
3087	15			Black Zinc	.875"	5/16-18	.625"	1.437"	.250"	.046 lb
3088	15			Black Zinc	2.362"	5/16-18	.625"	2.937"	.250"	.105 lb
3908	15			Bright Zinc	.875"	M8 x 1.25	.625"	1.437"	.250"	.044 lb
3910	15			Bright Zinc	2.362"	M8 x 1.25	.625"	2.937"	.250"	.107 lb
25-3085	25			Bright Zinc	14.30mm	M5 x 0.8	10.95mm	24.46mm	4.34mm	.0068 kg
25-3086	25			Bright Zinc	39.57mm	M5 x 0.8	10.95mm	49.17mm	4.34mm	.0154 kg
40-3087	40			Bright Zinc	24.00mm	M8 x 1.25	15.88mm	38.25mm	6.16mm	.0228 kg
40-3088	40			Bright Zinc	64.01mm	M8 x 1.25	15.88mm	78.16mm	6.16mm	.0516 kg

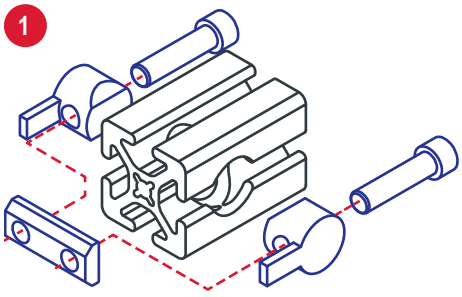

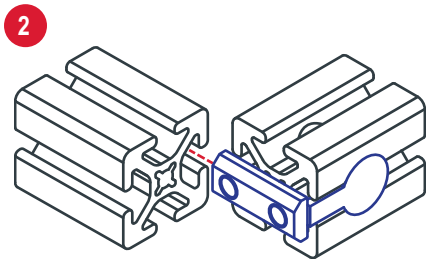

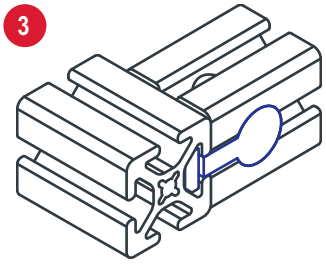

Nylon T-Slot Nut

Part Description:

The nylon T-slot nut is a light-duty fastening method typically used for accessories. The T-slot nut remains in place even when used in a vertical position. When used with a sheet metal screw, the nut expands into the T-slot. There are options available with or without the screws. **Additional Information:** Please note that nylon T-slot nuts 3346 and 40-3346 are sold in packs of 50 and 3348 and 40-3348 are sold in packs of 12.

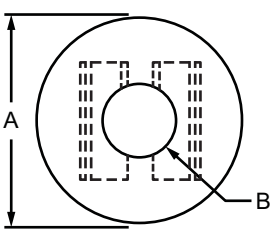

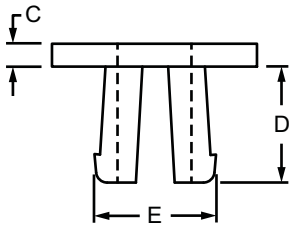

Part No.	Series	Screw	Qty.	Material	Grade	Color	A	B	C	D	E	Weight
3346	15	No	50	Plastic	Nylon	White	.557"	.200"	.062"	.330"	.315"	.001 lb
3348	15	Yes	12				.557"	.200"	.062"	.330"	.315"	.305 lb
40-3346	40	No	50				14.15mm	5.08mm	1.57mm	8.40mm	8.00mm	.0008 kg
40-3348	40	Yes	12				14.15mm	5.08mm	1.57mm	8.40mm	8.00mm	.1380 kg

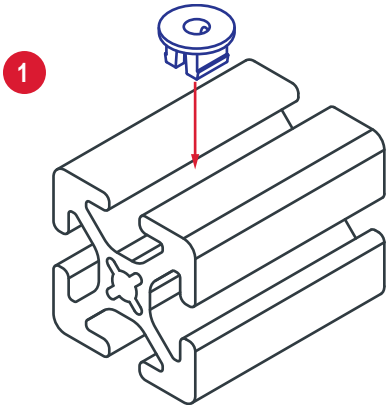

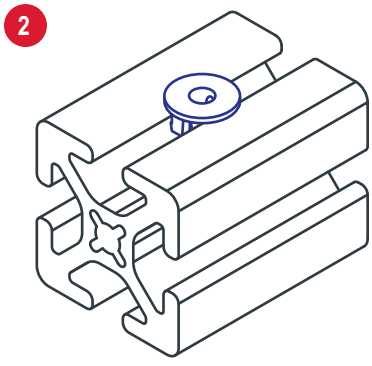

Button Head Socket Cap Screw (BHSCS)

Black Zinc/ Black-Coated

Blue Zinc/ Blue-Coated

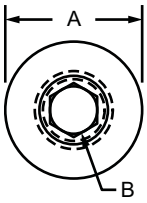

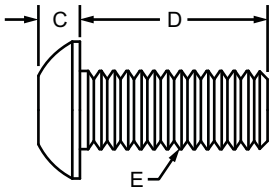

Bright Zinc

Stainless Steel

Part No.	Series	Material	Finish	A	B	C	D (Length)	E (Thread)	Thread Length	Weight
3005	F	Steel	Black Zinc	.305"	3/32	.082"	.375"	8-32	Full Thread	.002 lb
3024	F	Steel	Black Zinc	.305"	3/32	.082"	.500"	8-32	Full Thread	.003 lb
3032	F	Steel	Black Zinc	.305"	3/32	.082"	.875"	8-32	Full Thread	.005 lb
3042	F	Steel	Black Zinc	.354	1/8	.096"	.375"	10-32	Full Thread	.040 lb
3694	F	Stainless-Steel	Stainless	.354"	1/8	.096"	.375"	10-32	Full Thread	.004 lb
3050	F	Steel	Black Zinc	.354"	1/8	.096"	.500"	10-32	Full Thread	.005 lb
3696	F	Stainless-Steel	Stainless	.354"	1/8	.096"	.500"	10-32	Full Thread	.005 lb
3051	F	Steel	Black Zinc	.354"	1/8	.096"	.625"	10-32	Full Thread	.005 lb
3698	F	Stainless-Steel	Stainless	.354"	1/8	.096"	.625"	10-32	Full Thread	.006 lb
3054	F	Steel	Black Zinc	.354"	1/8	.096"	.750"	10-32	Full Thread	.006 lb
3059	F	Steel	Black Zinc	.428"	5/32	.127"	.375"	1/4-20	Full Thread	.007 lb
3688	F	Stainless-Steel	Stainless	.428"	5/32	.127"	.375"	1/4-20	Full Thread	.007 lb
65-3059	F	Steel	Black Zinc	.428"	5/32	.127"	.375"	1/4-20	Full Thread	.007 lb
3061	F	Steel	Black Zinc	.428"	5/32	.127"	.500"	1/4-20	Full Thread	.008 lb
3690	F	Stainless-Steel	Stainless	.428"	5/32	.127"	.500"	1/4-20	Full Thread	.008 lb
65-3061	F	Steel	Black Zinc	.428"	5/32	.127"	.500"	1/4-20	Full Thread	.008 lb
3063	F	Steel	Black Zinc	.428"	5/32	.127"	.625"	1/4-20	Full Thread	.009 lb
3663	F	Stainless-Steel	Stainless	.428"	5/32	.127"	.625"	1/4-20	Full Thread	.009 lb
65-3063	F	Steel	Black Zinc	.428"	5/32	.127"	.625"	1/4-20	Full Thread	.010 lb
3065	F	Steel	Black Zinc	.428"	5/32	.127"	.750"	1/4-20	Full Thread	.011 lb
3692	F	Stainless-Steel	Stainless	.428"	5/32	.127"	.750"	1/4-20	Full Thread	.010 lb
65-3065	F	Steel	Black Zinc	.428"	5/32	.127"	.750"	1/4-20	Full Thread	.011 lb
3104	F	Steel	Black Zinc	.537"	3/16	.159"	.500"	5/16-18	Full Thread	.014 lb
3609	F	Stainless-Steel	Stainless	.537"	3/16	.159"	.500"	5/16-18	Full Thread	.014 lb
3940	F	Steel	Bright Zinc	.537"	3/16	.159"	.500"	5/16-18	Full Thread	.018 lb
65-3104	F	Steel	Black Zinc	.537"	3/16	.159"	.500"	5/16-18	Full Thread	.014 lb
3111	F	Steel	Black Zinc	.537"	3/16	.159"	.625"	5/16-18	Full Thread	.020 lb
3611	F	Stainless-Steel	Stainless	.537"	3/16	.159"	.625"	5/16-18	Full Thread	.017 lb
65-3111	F	Steel	Black Zinc	.537"	3/16	.159"	.625"	5/16-18	Full Thread	.016 lb
3114	F	Steel	Black Zinc	.537"	3/16	.159"	.750"	5/16-18	Full Thread	.019 lb
3614	F	Stainless-Steel	Stainless	.537"	3/16	.159"	.750"	5/16-18	Full Thread	.019 lb
3941	F	Steel	Bright Zinc	.537"	3/16	.159"	.750"	5/16-18	Full Thread	.028 lb
65-3114	F	Steel	Black Zinc	.537"	3/16	.159"	.750"	5/16-18	Full Thread	.018 lb
3117	F	Steel	Black Zinc	.537"	3/16	.159"	.875"	5/16-18	Full Thread	.020 lb
3617	F	Stainless-Steel	Stainless	.537"	3/16	.159"	.875"	5/16-18	Full Thread	.021 lb
3118	F	Steel	Black Zinc	.537"	3/16	.159"	1.000"	5/16-18	Full Thread	.022 lb
3621	F	Stainless-Steel	Stainless	.537"	3/16	.159"	1.000"	5/16-18	Full Thread	.023 lb
3942	F	Steel	Bright Zinc	.537"	3/16	.159"	1.000"	5/16-18	Full Thread	.023 lb
65-3118	F	Steel	Black Zinc	.537"	3/16	.159"	1.000"	5/16-18	Full Thread	.022 lb

CONTINUE

Button Head Socket Cap Screw (Continued)

Part No.	Series	Material	Finish	A	B	C	D (Length)	E (Thread)	Thread Length	Weight
3943	F	Steel	Bright Zinc	.537"	3/16	.159"	1.250"	5/16-18	Full Thread	.027 lb
3944	F	Steel	Bright Zinc	.537"	3/16	.159"	1.500"	5/16-18	Full Thread	.031 lb
3945	F	Steel	Bright Zinc	.537"	3/16	.159"	1.750"	5/16-18	Full Thread	.035 lb
3946	F	Steel	Bright Zinc	.537"	3/16	.159"	2.000"	5/16-18	Full Thread	.034 lb
3947	F	Steel	Bright Zinc	.537"	3/16	.159"	2.250"	5/16-18	Full Thread	.044 lb
3948	F	Steel	Bright Zinc	.537"	3/16	.159"	3.500"	5/16-18	Full Thread	.065 lb
11-4310	M	Steel	Black Zinc	7.60mm	2.50mm	2.20mm	10.00mm	M4 x 0.7	Full Thread	.0012 kg
11-4312	M	Steel	Black Zinc	7.60mm	2.50mm	2.20mm	12.00mm	M4 x 0.7	Full Thread	.0014 kg
11-5308	M	Steel	Black Zinc	9.32mm	3.00mm	2.63mm	8.00mm	M5 x 0.8	Full Thread	.0018 kg
11-5310	M	Steel	Black Zinc	9.32mm	3.00mm	2.63mm	10.00mm	M5 x 0.8	Full Thread	.0023 kg
13-5310	M	Steel	Blue Zinc	9.32mm	3.00mm	2.63mm	10.00mm	M5 x 0.8	Full Thread	.0023 kg
17-5310	M	Stainless-Steel	Stainless	9.32mm	3.00mm	2.63mm	10.00mm	M5 x 0.8	Full Thread	.0023 kg
11-5312	M	Steel	Black Zinc	9.32mm	3.00mm	2.63mm	12.00mm	M5 x 0.8	Full Thread	.0023 kg
13-5312	M	Steel	Blue Zinc	9.32mm	3.00mm	2.63mm	12.00mm	M5 x 0.8	Full Thread	.0023 kg
17-5312	M	Stainless-Steel	Stainless	9.32mm	3.00mm	2.63mm	12.00mm	M5 x 0.8	Full Thread	.0023 kg
11-5314	M	Steel	Black Zinc	9.32mm	3.00mm	2.63mm	14.00mm	M5 x 0.8	Full Thread	.0027 kg
11-5316	M	Steel	Black Zinc	9.32mm	3.00mm	2.63mm	16.00mm	M5 x 0.8	Full Thread	.0027 kg
13-5316	M	Steel	Blue Zinc	9.32mm	3.00mm	2.63mm	16.00mm	M5 x 0.8	Full Thread	.0027 kg
17-5316	M	Stainless-Steel	Stainless	9.32mm	3.00mm	2.63mm	16.00mm	M5 x 0.8	Full Thread	.0027 kg
13-5320	M	Steel	Blue Zinc	9.32mm	3.00mm	2.63mm	20.00mm	M5 x 0.8	Full Thread	.0032 kg
11-6310	M	Steel	Black Zinc	10.29mm	4.00mm	3.15mm	10.00mm	M6 x 1.0	Full Thread	.0032 kg
13-6310	M	Steel	Blue Zinc	10.29mm	4.00mm	3.15mm	10.00mm	M6 x 1.0	Full Thread	.0032 kg
17-6310	M	Stainless-Steel	Stainless	10.29mm	4.00mm	3.15mm	10.00mm	M6 x 1.0	Full Thread	.0032 kg
3802	M	Steel	Bright Zinc	10.29mm	4.00mm	3.15mm	12.00mm	M6 x 1.0	Full Thread	.0059 kg
11-6312	M	Steel	Black Zinc	10.29mm	4.00mm	3.15mm	12.00mm	M6 x 1.0	Full Thread	.0032 kg
13-6312	M	Steel	Blue Zinc	10.29mm	4.00mm	3.15mm	12.00mm	M6 x 1.0	Full Thread	.0032 kg
17-6312	M	Stainless-Steel	Stainless	10.29mm	4.00mm	3.15mm	12.00mm	M6 x 1.0	Full Thread	.0032 kg
19-6312	M	Steel	Bright Zinc	10.29mm	4.00mm	3.15mm	12.00mm	M6 x 1.0	Full Thread	.0032 kg
11-6314	M	Steel	Black Zinc	10.29mm	4.00mm	3.15mm	14.00mm	M6 x 1.0	Full Thread	.0036 kg
3804	M	Steel	Bright Zinc	10.29mm	4.00mm	3.15mm	16.00mm	M6 x 1.0	Full Thread	.0036 kg
11-6316	M	Steel	Black Zinc	10.29mm	4.00mm	3.15mm	16.00mm	M6 x 1.0	Full Thread	.0041 kg
13-6316	M	Steel	Blue Zinc	10.29mm	4.00mm	3.15mm	16.00mm	M6 x 1.0	Full Thread	.0041 kg
17-6316	M	Stainless-Steel	Stainless	10.29mm	4.00mm	3.15mm	16.00mm	M6 x 1.0	Full Thread	.0041 kg
19-6316	M	Steel	Bright Zinc	10.29mm	4.00mm	3.15mm	16.00mm	M6 x 1.0	Full Thread	.0039 kg
11-6318	M	Steel	Black Zinc	10.29mm	4.00mm	3.15mm	18.00mm	M6 x 1.0	Full Thread	.0045 kg
3808	M	Steel	Bright Zinc	10.29mm	4.00mm	3.15mm	20.00mm	M6 x 1.0	Full Thread	.0045 kg
11-6320	M	Steel	Black Zinc	10.29mm	4.00mm	3.15mm	20.00mm	M6 x 1.0	Full Thread	.0045 kg
13-6320	M	Steel	Blue Zinc	10.29mm	4.00mm	3.15mm	20.00mm	M6 x 1.0	Full Thread	.0045 kg
17-6320	M	Stainless-Steel	Stainless	10.29mm	4.00mm	3.15mm	20.00mm	M6 x 1.0	Full Thread	.0045 kg
19-6320	M	Steel	Bright Zinc	10.29mm	4.00mm	3.15mm	20.00mm	M6 x 1.0	Full Thread	.0045 kg
3809	M	Steel	Bright Zinc	10.29mm	4.00mm	3.15mm	25.00mm	M6 x 1.0	Full Thread	.0054 kg
13-6325	M	Steel	Blue Zinc	10.29mm	4.00mm	3.15mm	25.00mm	M6 x 1.0	Full Thread	.0054 kg
19-6325	M	Steel	Bright Zinc	10.29mm	4.00mm	3.15mm	25.00mm	M6 x 1.0	Full Thread	.0054 kg
3811	M	Steel	Bright Zinc	13.79mm	5.00mm	4.23mm	12.00mm	M8 x 1.25	Full Thread	.0064 kg
11-8312	M	Steel	Black Zinc	13.79mm	5.00mm	4.23mm	12.00mm	M8 x 1.25	Full Thread	.0068 kg
13-8312	M	Steel	Blue Zinc	13.79mm	5.00mm	4.23mm	12.00mm	M8 x 1.25	Full Thread	.0068 kg
13-3940	M	Steel	Blue Zinc	14.00mm	8.00mm	6.60mm	12.00mm	M8 x 1.25	Full Thread	.0067 kg

View page 387 for dimensional drawing

CONTINUE

Button Head Socket Cap Screw (Continued) / Flanged Button Head Socket Cap Screw

Button Head Socket Cap Screw (BHSCS)

Part No.	Series	Material	Finish	A	B	C	D (Length)	E (Thread)	Thread Length	Weight
17-8312	M	Stainless-Steel	Stainless	13.79mm	5.00mm	4.23mm	12.00mm	M8 x 1.25	Full Thread	.0068 kg
19-8312	M	Steel	Bright Zinc	13.79mm	5.00mm	4.23mm	12.00mm	M8 x 1.25	Full Thread	.0068 kg
3813	M	Steel	Bright Zinc	13.79mm	5.00mm	4.23mm	16.00mm	M8 x 1.25	Full Thread	.0077 kg
11-8316	M	Steel	Black Zinc	13.79mm	5.00mm	4.23mm	16.00mm	M8 x 1.25	Full Thread	.0077 kg
13-8316	M	Steel	Blue Zinc	13.79mm	5.00mm	4.23mm	16.00mm	M8 x 1.25	Full Thread	.0077 kg
17-8316	M	Stainless-Steel	Stainless	13.79mm	5.00mm	4.23mm	16.00mm	M8 x 1.25	Full Thread	.0077 kg
19-8316	M	Steel	Bright Zinc	13.79mm	5.00mm	4.23mm	16.00mm	M8 x 1.25	Full Thread	.0077 kg
11-8318	M	Steel	Black Zinc	13.79mm	5.00mm	4.23mm	18.00mm	M8 x 1.25	Full Thread	.0082 kg
3815	M	Steel	Bright Zinc	13.79mm	5.00mm	4.23mm	20.00mm	M8 x 1.25	Full Thread	.0091 kg
11-8320	M	Steel	Black Zinc	13.79mm	5.00mm	4.23mm	20.00mm	M8 x 1.25	Full Thread	.0092 kg
13-8320	M	Steel	Blue Zinc	13.79mm	5.00mm	4.23mm	20.00mm	M8 x 1.25	Full Thread	.0092 kg
13-3941	M	Steel	Blue Zinc	13.79mm	5.00mm	4.23mm	20.00mm	M8 x 1.25	Full Thread	.0092 kg
17-8320	M	Stainless-Steel	Stainless	13.79mm	5.00mm	4.23mm	20.00mm	M8 x 1.25	Full Thread	.0092 kg
19-8320	M	Steel	Bright Zinc	13.79mm	5.00mm	4.23mm	20.00mm	M8 x 1.25	Full Thread	.0092 kg
3819	M	Steel	Bright Zinc	13.79mm	5.00mm	4.23mm	25.00mm	M8 x 1.25	Full Thread	.0104 kg
11-8325	M	Steel	Black Zinc	13.79mm	5.00mm	4.23mm	25.00mm	M8 x 1.25	Full Thread	.0104 kg
13-8325	M	Steel	Blue Zinc	13.79mm	5.00mm	4.23mm	25.00mm	M8 x 1.25	Full Thread	.0104 kg
13-3942	M	Steel	Blue Zinc	13.79mm	5.00mm	4.23mm	25.00mm	M8 x 1.25	Full Thread	.0107 kg
17-8325	M	Stainless-Steel	Stainless	13.79mm	5.00mm	4.23mm	25.00mm	M8 x 1.25	Full Thread	.0104 kg
19-8325	M	Steel	Bright Zinc	13.79mm	5.00mm	4.23mm	25.00mm	M8 x 1.25	Full Thread	.0104 kg
13-3943	M	Steel	Blue Zinc	14.00mm	8.00mm	6.60mm	30.00mm	M8 x 1.25	Full Thread	.0121 kg
13-3944	M	Steel	Blue Zinc	14.00mm	8.00mm	6.60mm	40.00mm	M8 x 1.25	Full Thread	.0154 kg
13-3945	M	Steel	Blue Zinc	14.00mm	8.00mm	6.60mm	45.00mm	M8 x 1.25	Full Thread	.0169 kg
13-3946	M	Steel	Blue Zinc	14.00mm	8.00mm	6.60mm	50.00mm	M8 x 1.25	Full Thread	.0187 kg
13-3947	M	Steel	Blue Zinc	14.00mm	8.00mm	6.60mm	60.00mm	M8 x 1.25	Full Thread	.0217 kg
13-3948	M	Steel	Blue Zinc	14.00mm	8.00mm	6.60mm	80.00mm	M8 x 1.25	Full Thread	.0263 kg

View page 387 for dimensional drawing

Flanged Button Head Socket Cap Screw (FBHSCS)

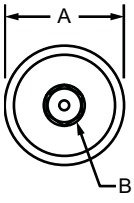

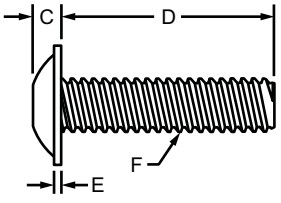

Black Zinc

Stainless Steel

Blue Zinc

Part No.	Series	Material	Finish	A	B	C	D (Length)	E	F (Thread)	Thread Length	Weight
3390	F	Steel	Black Zinc	.560”	5/32	.132”	.375”	.046”	1/4-20	Full Thread	.007 lb
3601	F	Stainless-Steel	Stainless	.560”	5/32	.132”	.375”	.046”	1/4-20	Full Thread	.007 lb
3342	F	Steel	Black Zinc	.560”	5/32	.132”	.500”	.046”	1/4-20	Full Thread	.009 lb
3603	F	Stainless-Steel	Stainless	.560”	5/32	.132”	.500”	.046”	1/4-20	Full Thread	.008 lb
3066	F	Steel	Black Zinc	.560”	5/32	.132”	.750”	.046”	1/4-20	Full Thread	.011 lb
3604	F	Stainless-Steel	Stainless	.560”	5/32	.132”	.750”	.046”	1/4-20	Full Thread	.011 lb
3340	F	Steel	Black Zinc	.660”	3/16	.166”	.500”	.060”	5/16-18	Full Thread	.017 lb

CONTINUE

Flanged Button Head Socket Cap Screw (FBHSCS)

Part No.	Series	Material	Finish	A	B	C	D (Length)	E	F (Thread)	Thread Length	Weight
3606	F	Stainless-Steel	Stainless	.660"	3/16	.166"	.500"	.060"	5/16-18	Full Thread	.016 lb
3330	F	Steel	Black Zinc	.660"	3/16	.166"	.687"	.060"	5/16-18	Full Thread	.019 lb
3607	F	Stainless-Steel	Stainless	.660"	3/16	.166"	.687"	.060"	5/16-18	Full Thread	.019 lb
13-6410	M	Steel	Blue Zinc	13.25mm	4.00mm	3.15mm	10.00mm	1.10mm	M6 x 1.0	Full Thread	.0034 kg
17-6410	M	Stainless-Steel	Stainless	13.25mm	4.06mm	3.15mm	10.00mm	1.10mm	M6 x 1.0	Full Thread	.0034 kg
13-6412	M	Steel	Blue Zinc	13.25mm	4.00mm	3.15mm	12.00mm	1.10mm	M6 x 1.0	Full Thread	.0038 kg
17-6412	M	Stainless-Steel	Stainless	13.25mm	4.06mm	3.15mm	12.00mm	1.10mm	M6 x 1.0	Full Thread	.0038 kg
13-6416	M	Steel	Blue Zinc	13.25mm	4.00mm	3.15mm	16.00mm	1.10mm	M6 x 1.0	Full Thread	.0044 kg
17-6416	M	Stainless-Steel	Stainless	13.25mm	4.06mm	3.15mm	16.00mm	1.10mm	M6 x 1.0	Full Thread	.0044 kg
13-8416	M	Steel	Blue Zinc	17.45mm	5.00mm	4.25mm	16.00mm	1.38mm	M8 x 1.25	Full Thread	.0090 kg
17-8416	M	Stainless-Steel	Stainless	17.45mm	5.00mm	4.25mm	16.00mm	1.38mm	M8 x 1.25	Full Thread	.0118 kg
13-8425	M	Steel	Blue Zinc	17.45mm	5.00mm	4.25mm	25.00mm	1.38mm	M8 x 1.25	Full Thread	.0090 kg
17-8425	M	Stainless-Steel	Stainless	17.45mm	5.00mm	4.25mm	25.00mm	1.38mm	M8 x 1.25	Full Thread	.0118 kg

View page 389 for dimensional drawing

Flat Head Socket Cap Screw (FHSCS)

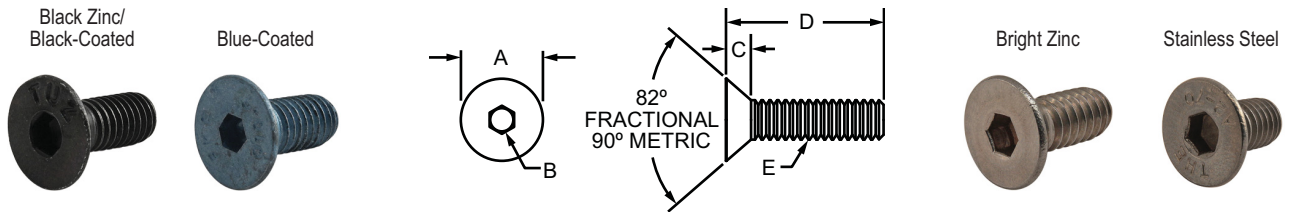

Part No.	Series	Material	Finish	A	B	C	D (Length)	E (Thread)	Thread Length	Weight
3649	F	Stainless-Steel	Stainless	.335"	3/32	.105"	.250"	8-32	Full Thread	.002 lb
3650	F	Stainless-Steel	Stainless	.385"	1/8	.127"	.375"	10-24	Full Thread	.003 lb
3022	F	Steel	Black Zinc	.385"	1/8	.127"	.500"	10-32	Full Thread	.004 lb
3012	F	Steel	Black Zinc	.506"	5/32	.161"	.375"	1/4-20	Full Thread	.006 lb
3400	F	Steel	Black Zinc	.506"	5/32	.161"	.500"	1/4-20	Full Thread	.009 lb
3645	F	Stainless-Steel	Stainless	.506"	5/32	.161"	.500"	1/4-20	Full Thread	.008 lb
3405	F	Steel	Black Zinc	.506"	5/32	.161"	.625"	1/4-20	Full Thread	.010 lb
3677	F	Stainless-Steel	Stainless	.506"	5/32	.161"	.625"	1/4-20	Full Thread	.009 lb
3406	F	Steel	Black Zinc	.506"	5/32	.161"	.750"	1/4-20	Full Thread	.011 lb
3011	F	Steel	Black Zinc	.628"	3/16	.198"	.500"	5/16-18	Full Thread	.014 lb
3410	F	Steel	Black Zinc	.628"	3/16	.198"	.625"	5/16-18	Full Thread	.017 lb
3411	F	Steel	Black Zinc	.628"	3/16	.198"	.750"	5/16-18	Full Thread	.018 lb
3420	F	Steel	Black Zinc	.751"	7/32	.234"	.750"	3/8-16	Full Thread	.028 lb
11-4710	M	Steel	Black Zinc	8.25mm	2.50mm	2.48mm	10.00mm	M4 x 0.7	Full Thread	.0009 kg
11-4712	M	Steel	Black Zinc	8.25mm	2.50mm	2.48mm	12.00mm	M4 x 0.7	Full Thread	.0014 kg
11-5708	M	Steel	Black Zinc	10.32mm	3.00mm	3.10mm	8.00mm	M5 x 0.8	Full Thread	.0014 kg
11-5710	M	Steel	Black Zinc	10.32mm	3.00mm	3.10mm	10.00mm	M5 x 0.8	Full Thread	.0018 kg
11-5712	M	Steel	Black Zinc	10.32mm	3.00mm	3.10mm	12.00mm	M5 x 0.8	Full Thread	.0018 kg
13-5712	M	Steel	Blue Zinc	10.32mm	3.00mm	3.10mm	12.00mm	M5 x 0.8	Full Thread	.0018 kg
11-5714	M	Steel	Black Zinc	10.32mm	3.00mm	3.10mm	14.00mm	M5 x 0.8	Full Thread	.0027 kg

CONTINUE

Flat Head Socket Cap Screw (FHSCS)

Part No.	Series	Material	Finish	A	B	C	D (Length)	E (Thread)	Thread Length	Weight
11-5716	M	Steel	Black Zinc	10.32mm	3.00mm	3.10mm	16.00mm	M5 x 0.8	Full Thread	.0027 kg
13-6710	M	Steel	Blue Zinc	12.39mm	4.00mm	3.72mm	10.00mm	M6 x 1.0	Full Thread	.0023 kg
13-6712	M	Steel	Blue Zinc	12.39mm	4.00mm	3.72mm	12.00mm	M6 x 1.0	Full Thread	.0027 kg
17-6712	M	Stainless-Steel	Stainless	12.39mm	4.00mm	3.72mm	12.00mm	M6 x 1.0	Full Thread	.0032 kg
11-6714	M	Steel	Black Zinc	12.39mm	4.00mm	3.72mm	14.00mm	M6 x 1.0	Full Thread	.0032 kg
11-6716	M	Steel	Black Zinc	12.39mm	4.00mm	3.72mm	16.00mm	M6 x 1.0	Full Thread	.0036 kg
13-6716	M	Steel	Blue Zinc	12.39mm	4.00mm	3.72mm	16.00mm	M6 x 1.0	Full Thread	.0036 kg
11-6718	M	Steel	Black Zinc	12.39mm	4.00mm	3.72mm	18.00mm	M6 x 1.0	Full Thread	.0041 kg
11-6720	M	Steel	Black Zinc	12.39mm	4.00mm	3.72mm	20.00mm	M6 x 1.0	Full Thread	.0041 kg
13-8712	M	Steel	Blue Zinc	16.58mm	5.00mm	4.96mm	12.00mm	M8 x 1.25	Full Thread	.0059 kg
11-8716	M	Steel	Black Zinc	16.58mm	5.00mm	4.96mm	16.00mm	M8 x 1.25	Full Thread	.0073 kg
13-8716	M	Steel	Blue Zinc	16.58mm	5.00mm	4.96mm	16.00mm	M8 x 1.25	Full Thread	.0073 kg
11-8720	M	Steel	Black Zinc	16.58mm	5.00mm	4.96mm	20.00mm	M8 x 1.25	Full Thread	.0082 kg
13-8720	M	Steel	Blue Zinc	16.58mm	5.00mm	4.96mm	20.00mm	M8 x 1.25	Full Thread	.0082 kg
40-3650	40	Stainless-Steel	Stainless	9.78mm	3.18mm	3.23mm	9.53mm	10-24	Full Thread	.0015 kg

View page 390 for dimensional drawing

Socket Head Cap Screw (SHCS)

Black Zinc/ Black-Coated

Blue Zinc/ Blue-Coated

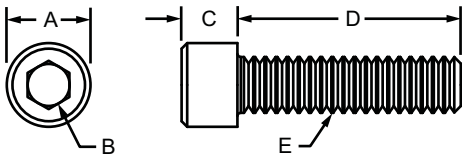

Bright Zinc

Stainless Steel

Part No.	Series	Material	Finish	A	B	C	D (Length)	E (Thread)	Thread Length	Weight
3044	F	Steel	Black Zinc	.308"	5/32	.188"	.375"	10-32	Full Thread	.005 lb
3693	F	Stainless-Steel	Stainless	.308"	5/32	.188"	.375"	10-32	Full Thread	.005 lb
3048	F	Steel	Black Zinc	.308"	5/32	.188"	.500"	10-32	Full Thread	.006 lb
3695	F	Stainless-Steel	Stainless	.308"	5/32	.188"	.500"	10-32	Full Thread	.006 lb
3052	F	Steel	Black Zinc	.308"	5/32	.188"	.625"	10-32	Full Thread	.006 lb
3697	F	Stainless-Steel	Stainless	.308"	5/32	.188"	.625"	10-32	Full Thread	.007 lb
3056	F	Steel	Black Zinc	.308"	5/32	.188"	.750"	10-32	Full Thread	.008 lb
3685	F	Stainless-Steel	Stainless	.308"	5/32	.188"	.750"	10-32	Full Thread	.007 lb
3057	F	Steel	Black Zinc	.308"	5/32	.188"	.875"	10-32	Full Thread	.008 lb
3058	F	Steel	Black Zinc	.370"	3/16	.247"	.375"	1/4-20	Full Thread	.006 lb
3687	F	Stainless-Steel	Stainless	.370"	3/16	.247"	.375"	1/4-20	Full Thread	.006 lb
65-3058	F	Steel	Black Zinc	.370"	3/16	.247"	.375"	1/4-20	Full Thread	.008 lb
3062	F	Steel	Black Zinc	.370"	3/16	.247"	.500"	1/4-20	Full Thread	.011 lb
3689	F	Stainless-Steel	Stainless	.370"	3/16	.247"	.500"	1/4-20	Full Thread	.010 lb
65-3062	F	Steel	Black Zinc	.370"	3/16	.247"	.500"	1/4-20	Full Thread	.011 lb
3067	F	Steel	Black Zinc	.370"	3/16	.247"	.625"	1/4-20	Full Thread	.012 lb
65-3067	F	Steel	Black Zinc	.370"	3/16	.247"	.625"	1/4-20	Full Thread	.009 lb
3064	F	Steel	Black Zinc	.370"	3/16	.247"	.750"	1/4-20	Full Thread	.013 lb

CONTINUE

Socket Head Cap Screw (Continued)

Part No.	Series	Material	Finish	A	B	C	D (Length)	E (Thread)	Thread Length	Weight
3691	F	Stainless-Steel	Stainless	.370"	3/16	.247"	.750"	1/4-20	Full Thread	.013 lb
65-3064	F	Steel	Black Zinc	.370"	3/16	.247"	.750"	1/4-20	Full Thread	.013 lb
3068	F	Steel	Black Zinc	.370"	3/16	.247"	.875"	1/4-20	Full Thread	.014 lb
3071	F	Steel	Black Zinc	.370"	3/16	.247"	1.000"	1/4-20	Full Thread	.015 lb
3671	F	Stainless-Steel	Stainless	.370"	3/16	.247"	1.000"	1/4-20	Full Thread	.016 lb
65-3071	F	Steel	Black Zinc	.370"	3/16	.247"	1.000"	1/4-20	Full Thread	.015 lb
3072	F	Steel	Black Zinc	.370"	3/16	.247"	1.250"	1/4-20	1.000"	.017 lb
3080	F	Steel	Black Zinc	.370"	3/16	.247"	1.500"	1/4-20	1.000"	.010 lb
3081	F	Steel	Black Zinc	.370"	3/16	.247"	2.125"	1/4-20	1.000"	.030 lb
3082	F	Steel	Black Zinc	.370"	3/16	.247"	2.500"	1/4-20	1.000"	.035 lb
3106	F	Steel	Black Zinc	.463"	1/4	.309"	.500"	5/16-18	Full Thread	.019 lb
3610	F	Stainless-Steel	Stainless	.463"	1/4	.309"	.500"	5/16-18	Full Thread	.019 lb
3950	F	Steel	Bright Zinc	.463"	1/4	.309"	.500"	5/16-18	Full Thread	.018 lb
65-3106	F	Steel	Black Zinc	.463"	1/4	.309"	.500"	5/16-18	Full Thread	.019 lb
3110	F	Steel	Black Zinc	.463"	1/4	.309"	.625"	5/16-18	Full Thread	.021 lb
3612	F	Stainless-Steel	Stainless	.463"	1/4	.309"	.625"	5/16-18	Full Thread	.021 lb
65-3110	F	Steel	Black Zinc	.463"	1/4	.309"	.625"	5/16-18	Full Thread	.021 lb
3112	F	Steel	Black Zinc	.463"	1/4	.309"	.750"	5/16-18	Full Thread	.023 lb
3615	F	Stainless-Steel	Stainless	.463"	1/4	.309"	.750"	5/16-18	Full Thread	.023 lb
3951	F	Steel	Bright Zinc	.463"	1/4	.309"	.750"	5/16-18	Full Thread	.023 lb
65-3112	F	Steel	Black Zinc	.463"	1/4	.309"	.750"	5/16-18	Full Thread	.023 lb
3119	F	Steel	Black Zinc	.463"	1/4	.309"	.875"	5/16-18	Full Thread	.025 lb
3619	F	Stainless-Steel	Stainless	.463"	1/4	.309"	.875"	5/16-18	Full Thread	.025 lb
3122	F	Steel	Black Zinc	.463"	1/4	.309"	1.000"	5/16-18	Full Thread	.027 lb
3622	F	Stainless-Steel	Stainless	.463"	1/4	.309"	1.000"	5/16-18	Full Thread	.027 lb
3952	F	Steel	Bright Zinc	.463"	1/4	.309"	1.000"	5/16-18	Full Thread	.027 lb
65-3122	F	Steel	Black Zinc	.463"	1/4	.309"	1.000"	5/16-18	Full Thread	.027 lb
3627	F	Stainless-Steel	Stainless	.463"	1/4	.309"	1.250"	5/16-18	Full Thread	.032 lb
3953	F	Steel	Bright Zinc	.463"	1/4	.309"	1.250"	5/16-18	Full Thread	.031 lb
65-3123	F	Steel	Black Zinc	.463"	1/4	.309"	1.250"	5/16-18	Full Thread	.032 lb
3123	F	Steel	Black Zinc	.463"	1/4	.309"	1.300"	5/16-18	Full Thread	.032 lb
3127	F	Steel	Black Zinc	.463"	1/4	.309"	1.500"	5/16-18	Full Thread	.035 lb
3954	F	Steel	Bright Zinc	.463"	1/4	.309"	1.500"	5/16-18	1.125"	.035 lb
3129	F	Steel	Black Zinc	.463"	1/4	.309"	1.750"	5/16-18	1.400"	.042 lb
3955	F	Steel	Bright Zinc	.463"	1/4	.309"	1.750"	5/16-18	1.125"	.043 lb
3130	F	Steel	Black Zinc	.463"	1/4	.309"	2.000"	5/16-18	1.650"	.046 lb
3956	F	Steel	Bright Zinc	.463"	1/4	.309"	2.000"	5/16-18	1.125"	.046 lb
3131	F	Steel	Black Zinc	.463"	1/4	.309"	2.250"	5/16-18	1.400"	.052 lb
3957	F	Steel	Bright Zinc	.463"	1/4	.309"	2.250"	5/16-18	1.125"	.052 lb
3132	F	Steel	Black Zinc	.463"	1/4	.309"	2.500"	5/16-18	1.125"	.056 lb
3133	F	Steel	Black Zinc	.463"	1/4	.309"	3.000"	5/16-18	1.650"	.067 lb
3140	F	Alloy Steel	Black Zinc	.463"	1/4	.309"	3.250"	5/16-18	1.400"	.073 lb
3958	F	Steel	Bright Zinc	.463"	1/4	.309"	3.500"	5/16-18	1.125"	.077 lb
3125	F	Steel	Black Zinc	.556"	5/16	.372"	.750"	3/8-16	Full Thread	.037 lb
3124	F	Steel	Black Zinc	.556"	5/16	.372"	1.000"	3/8-16	Full Thread	.049 lb
3128	F	Steel	Black Zinc	.743"	3/8	.496"	1.000"	1/2-13	Full Thread	.091 lb
11-4510	M	Steel	Black Zinc	7.00mm	3.00mm	3.91mm	10.00mm	M4 x 0.7	Full Thread	.0017 kg
11-4512	M	Steel	Black Zinc	7.00mm	3.00mm	3.91mm	12.00mm	M4 x 0.7	Full Thread	.0018 kg

View page 391 for dimensional drawing

CONTINUE

Part No.	Series	Material	Finish	A	B	C	D (Length)	E (Thread)	Thread Length	Weight
11-4516	M	Steel	Black Zinc	7.00mm	3.00mm	3.91mm	16.00mm	M4 x 0.7	Full Thread	.0023 kg
11-5510	M	Steel	Black Zinc	8.39mm	4.00mm	4.91mm	10.00mm	M5 x 0.8	Full Thread	.0027 kg
13-5510	M	Steel	Blue Zinc	8.39mm	4.00mm	4.91mm	10.00mm	M5 x 0.8	Full Thread	.0027 kg
17-5510	M	Stainless-Steel	Stainless	8.39mm	4.00mm	4.91mm	10.00mm	M5 x 0.8	Full Thread	.0031 kg
11-5512	M	Steel	Black Zinc	8.39mm	4.00mm	4.91mm	12.00mm	M5 x 0.8	Full Thread	.0032 kg
13-5512	M	Steel	Blue Zinc	8.39mm	4.00mm	4.91mm	12.00mm	M5 x 0.8	Full Thread	.0032 kg
17-5512	M	Stainless-Steel	Stainless	8.39mm	4.00mm	4.91mm	12.00mm	M5 x 0.8	Full Thread	.0032 kg
11-5516	M	Steel	Black Zinc	8.39mm	4.00mm	4.91mm	16.00mm	M5 x 0.8	Full Thread	.0036 kg
13-5516	M	Steel	Blue Zinc	8.39mm	4.00mm	4.91mm	16.00mm	M5 x 0.8	Full Thread	.0036 kg
17-5516	M	Stainless-Steel	Stainless	8.39mm	4.00mm	4.91mm	16.00mm	M5 x 0.8	Full Thread	.0036 kg
11-5518	M	Steel	Black Zinc	8.50mm	4.00mm	4.00mm	18.00mm	M5 x 0.8	Full Thread	.0038 kg
13-5518	M	Steel	Blue Zinc	8.50mm	4.00mm	5.00mm	18.00mm	M5 x 0.8	Full Thread	.0038 kg
11-5520	M	Steel	Black Zinc	8.39mm	4.00mm	4.91mm	20.00mm	M5 x 0.8	Full Thread	.0039 kg
13-5520	M	Steel	Blue Zinc	8.39mm	4.00mm	4.91mm	20.00mm	M5 x 0.8	Full Thread	.0039 kg
17-5520	M	Stainless-Steel	Stainless	8.39mm	4.00mm	4.91mm	20.00mm	M5 x 0.8	Full Thread	.0039 kg
13-5525	M	Steel	Blue Zinc	8.50mm	4.00mm	5.00mm	25.00mm	M5 x 0.8	Full Thread	.0046 kg
13-5530	M	Steel	Blue Zinc	8.39mm	4.00mm	4.91mm	30.00mm	M5 x 0.8	22.00mm	.0054 kg
13-6508	M	Steel	Blue Zinc	10.00mm	5.00mm	6.00mm	8.00mm	M6 x 1.0	Full Thread	.0039 kg
11-6510	M	Steel	Black Zinc	9.89mm	5.00mm	5.85mm	10.00mm	M6 x 1.0	Full Thread	.0045 kg
13-6510	M	Steel	Blue Zinc	9.89mm	5.00mm	5.85mm	10.00mm	M6 x 1.0	Full Thread	.0045 kg
17-6510	M	Stainless-Steel	Stainless	9.89mm	5.00mm	5.85mm	10.00mm	M6 x 1.0	Full Thread	.0045 kg
3801	M	Steel	Bright Zinc	9.89mm	5.00mm	5.85mm	12.00mm	M6 x 1.0	Full Thread	.0045 kg
11-6512	M	Steel	Black Zinc	9.89mm	5.00mm	5.85mm	12.00mm	M6 x 1.0	Full Thread	.0045 kg
13-6512	M	Steel	Blue Zinc	9.89mm	5.00mm	5.85mm	12.00mm	M6 x 1.0	Full Thread	.0045 kg
17-6512	M	Stainless-Steel	Stainless	9.89mm	5.00mm	5.85mm	12.00mm	M6 x 1.0	Full Thread	.0045 kg
19-6512	M	Steel	Bright Zinc	9.89mm	5.00mm	5.85mm	12.00mm	M6 x 1.0	Full Thread	.0045 kg
11-6514	M	Steel	Black Zinc	9.89mm	5.00mm	5.85mm	14.00mm	M6 x 1.0	Full Thread	.0053 kg
3803	M	Steel	Bright Zinc	9.89mm	5.00mm	5.85mm	16.00mm	M6 x 1.0	Full Thread	.0054 kg
11-6516	M	Steel	Black Zinc	9.89mm	5.00mm	5.85mm	16.00mm	M6 x 1.0	Full Thread	.0054 kg
13-6516	M	Steel	Blue Zinc	9.89mm	5.00mm	5.85mm	16.00mm	M6 x 1.0	Full Thread	.0054 kg
17-6516	M	Stainless-Steel	Stainless	9.89mm	5.00mm	5.85mm	16.00mm	M6 x 1.0	Full Thread	.0054 kg
19-6516	M	Steel	Bright Zinc	9.89mm	5.00mm	5.85mm	16.00mm	M6 x 1.0	Full Thread	.0054 kg
11-6518	M	Steel	Black Zinc	9.89mm	5.00mm	5.85mm	18.00mm	M6 x 1.0	Full Thread	.0059 kg
3806	M	Steel	Bright Zinc	9.89mm	5.00mm	5.85mm	20.00mm	M6 x 1.0	Full Thread	.0059 kg
11-6520	M	Steel	Black Zinc	9.89mm	5.00mm	5.85mm	20.00mm	M6 x 1.0	Full Thread	.0058 kg
13-6520	M	Steel	Blue Zinc	9.89mm	5.00mm	5.85mm	20.00mm	M6 x 1.0	Full Thread	.0058 kg
17-6520	M	Stainless-Steel	Stainless	9.89mm	5.00mm	5.85mm	20.00mm	M6 x 1.0	Full Thread	.0058 kg
19-6520	M	Steel	Bright Zinc	9.89mm	5.00mm	5.85mm	20.00mm	M6 x 1.0	Full Thread	.0058 kg
3807	M	Steel	Bright Zinc	9.89mm	5.00mm	5.85mm	25.00mm	M6 x 1.0	Full Thread	.0064 kg
11-6525	M	Steel	Black Zinc	9.89mm	5.00mm	5.85mm	25.00mm	M6 x 1.0	Full Thread	.0068 kg
13-6525	M	Steel	Blue Zinc	9.89mm	5.00mm	5.85mm	25.00mm	M6 x 1.0	Full Thread	.0068 kg
19-6525	M	Steel	Bright Zinc	9.89mm	5.00mm	5.85mm	25.00mm	M6 x 1.0	Full Thread	.0068 kg
11-6530	M	Steel	Black Zinc	9.89mm	5.00mm	5.85mm	30.00mm	M6 x 1.0	Full Thread	.0077 kg
13-6530	M	Steel	Blue Zinc	9.89mm	5.00mm	5.85mm	30.00mm	M6 x 1.0	Full Thread	.0077 kg
11-6535	M	Steel	Black Zinc	9.89mm	5.00mm	5.85mm	35.00mm	M6 x 1.0	24.00mm	.0090 kg
13-6535	M	Steel	Blue Zinc	9.89mm	5.00mm	5.85mm	35.00mm	M6 x 1.0	24.00mm	.0091 kg
11-6540	M	Steel	Black Zinc	9.89mm	5.00mm	5.85mm	40.00mm	M6 x 1.0	24.00mm	.0104 kg
13-6540	M	Steel	Blue Zinc	9.89mm	5.00mm	5.85mm	40.00mm	M6 x 1.0	24.00mm	.0104 kg

View page 391 for dimensional drawing

CONTINUE

Socket Head Cap Screw (Continued)

Part No.	Series	Material	Finish	A	B	C	D (Length)	E (Thread)	Thread Length	Weight
3810	M	Steel	Bright Zinc	12.87mm	6.00mm	7.82mm	12.00mm	M8 x 1.25	Full Thread	.0100 kg
11-8512	M	Steel	Black Zinc	12.87mm	6.00mm	7.82mm	12.00mm	M8 x 1.25	Full Thread	.0100 kg
13-3950	M	Steel	Blue Zinc	13.00mm	6.00mm	8.00mm	12.00mm	M8 x 1.25	Full Thread	.0102 kg
13-8512	M	Steel	Blue Zinc	12.87mm	6.00mm	7.82mm	12.00mm	M8 x 1.25	Full Thread	.0100 kg
17-8512	M	Stainless-Steel	Stainless	12.87mm	6.00mm	7.82mm	12.00mm	M8 x 1.25	Full Thread	.0100 kg
19-8512	M	Steel	Bright Zinc	12.87mm	6.00mm	7.82mm	12.00mm	M8 x 1.25	Full Thread	.0100 kg
3812	M	Steel	Bright Zinc	12.87mm	6.00mm	7.82mm	16.00mm	M8 x 1.25	Full Thread	.0113 kg
11-8516	M	Steel	Black Zinc	12.87mm	6.00mm	7.82mm	16.00mm	M8 x 1.25	Full Thread	.0113 kg
13-8516	M	Steel	Blue Zinc	12.87mm	6.00mm	7.82mm	16.00mm	M8 x 1.25	Full Thread	.0113 kg
17-8516	M	Stainless-Steel	Stainless	12.87mm	6.00mm	7.82mm	16.00mm	M8 x 1.25	Full Thread	.0113 kg
19-8516	M	Steel	Bright Zinc	12.87mm	6.00mm	7.82mm	16.00mm	M8 x 1.25	Full Thread	.0113 kg
11-8518	M	Steel	Black Zinc	12.87mm	6.00mm	7.82mm	18.00mm	M8 x 1.25	Full Thread	.0118 kg
13-8518	M	Steel	Blue Zinc	12.87mm	6.00mm	7.82mm	18.00mm	M8 x 1.25	Full Thread	.0118 kg
3814	M	Steel	Bright Zinc	12.87mm	6.00mm	7.82mm	20.00mm	M8 x 1.25	Full Thread	.0126 kg
11-8520	M	Steel	Black Zinc	12.87mm	6.00mm	7.82mm	20.00mm	M8 x 1.25	Full Thread	.0127 kg
13-3951	M	Steel	Blue Zinc	13.00mm	6.00mm	8.00mm	20.00mm	M8 x 1.25	Full Thread	.0128 kg
13-8520	M	Steel	Blue Zinc	12.87mm	6.00mm	7.82mm	20.00mm	M8 x 1.25	Full Thread	.0127 kg
17-8520	M	Stainless-Steel	Stainless	12.87mm	6.00mm	7.82mm	20.00mm	M8 x 1.25	Full Thread	.0127 kg
19-8520	M	Steel	Bright Zinc	12.87mm	6.00mm	7.82mm	20.00mm	M8 x 1.25	Full Thread	.0127 kg
13-8522	M	Steel	Blue Zinc	12.87mm	6.00mm	7.82mm	22.00mm	M8 x 1.25	Full Thread	.0132 kg
3818	M	Steel	Bright Zinc	12.87mm	6.00mm	7.82mm	25.00mm	M8 x 1.25	Full Thread	.0145 kg
11-8525	M	Steel	Black Zinc	12.87mm	6.00mm	7.82mm	25.00mm	M8 x 1.25	Full Thread	.0141 kg
13-8525	M	Steel	Blue Zinc	12.87mm	6.00mm	7.82mm	25.00mm	M8 x 1.25	Full Thread	.0141 kg
13-3952	M	Steel	Blue Zinc	13.00mm	6.00mm	8.00mm	25.00mm	M8 x 1.25	Full Thread	.0143 kg
17-8525	M	Stainless-Steel	Stainless	12.87mm	6.00mm	7.82mm	25.00mm	M8 x 1.25	Full Thread	.0141 kg
19-8525	M	Steel	Bright Zinc	12.87mm	6.00mm	7.82mm	25.00mm	M8 x 1.25	Full Thread	.0141 kg
3822	M	Steel	Bright Zinc	12.80 mm	6.00mm	7.82mm	30.00mm	M8 x 1.25	Full Thread	.0159 kg
11-8530	M	Steel	Black Zinc	12.87mm	6.00mm	7.82mm	30.00mm	M8 x 1.25	Full Thread	.0159 kg
13-8530	M	Steel	Blue Zinc	12.87mm	6.00mm	7.82mm	30.00mm	M8 x 1.25	Full Thread	.0159 kg
13-3953	M	Steel	Blue Zinc	13.00mm	6.00mm	8.00mm	30.00mm	M8 x 1.25	Full Thread	.0156 kg
17-8530	M	Stainless-Steel	Stainless	12.87mm	6.00mm	7.82mm	30.00mm	M8 x 1.25	Full Thread	.0159 kg
19-8530	M	Steel	Bright Zinc	12.87mm	6.00mm	7.82mm	30.00mm	M8 x 1.25	Full Thread	.0159 kg
3839	M	Steel	Bright Zinc	13.00mm	6.00mm	8.00mm	32.00mm	M8 x 1.25	20.00mm	.0200 kg
11-8535	M	Steel	Black Zinc	12.87mm	6.00mm	7.82mm	35.00mm	M8 x 1.25	Full Thread	.0172 kg
13-8535	M	Steel	Blue Zinc	12.87mm	6.00mm	7.82mm	35.00mm	M8 x 1.25	Full Thread	.0172 kg
17-8535	M	Stainless-Steel	Stainless	12.87mm	6.00mm	7.82mm	35.00mm	M8 x 1.25	Full Thread	.0172 kg
11-8540	M	Steel	Black Zinc	12.87mm	6.00mm	7.82mm	40.00mm	M8 x 1.25	28.00mm	.0191 kg
13-8540	M	Steel	Blue Zinc	12.87mm	6.00mm	7.82mm	40.00mm	M8 x 1.25	28.00mm	.0191 kg
13-3954	M	Steel	Blue Zinc	13.00mm	6.00mm	8.00mm	40.00mm	M8 x 1.25	28.00mm	.0242 kg
17-8540	M	Stainless-Steel	Stainless	12.87mm	6.00mm	7.82mm	40.00mm	M8 x 1.25	28.00mm	.0191 kg
13-3955	M	Steel	Blue Zinc	13.00mm	6.00mm	8.00mm	45.00mm	M8 x 1.25	28.00mm	.0211 kg
13-8550	M	Steel	Blue Zinc	12.87mm	6.00mm	7.82mm	50.00mm	M8 x 1.25	28.00mm	.0231 kg
13-3956	M	Steel	Blue Zinc	13.00mm	6.00mm	8.00mm	50.00mm	M8 x 1.25	28.00mm	.0233 kg
13-3957	M	Steel	Blue Zinc	13.00mm	6.00mm	8.00mm	60.00mm	M8 x 1.25	28.00mm	.0272 kg
13-3958	M	Steel	Blue Zinc	13.00mm	6.00mm	8.00mm	80.00mm	M8 x 1.25	28.00mm	.0349 kg
13-1520	M	Steel	Blue Zinc	15.87mm	8.00mm	9.82mm	20.00mm	M10 x 1.50	Full Thread	.0218 kg
13-1525	M	Steel	Blue Zinc	15.87mm	8.00mm	9.82mm	25.00mm	M10 x 1.50	Full Thread	.0240 kg

View page 391 for dimensional drawing

Low Head Socket Cap Screw (LHSCS)

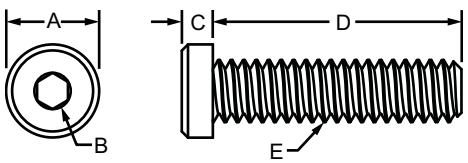

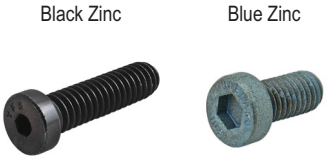

Part No.	Series	Material	Finish	A	B	C	D (Length)	E (Thread)	Thread Length	Weight
3017	F	Steel	Black Zinc	.372"	1/8	.124"	1.000"	1/4-20	Full Thread	.013 lb
3018	F		Black Zinc	.434"	5/32	.155"	1.250"	5/16-18	Full Thread	.026 lb
13-1993	M		Blue Zinc	10.00mm	5.00mm	4.00mm	10.00mm	M6 x 1.0	Full Thread	.0036 kg
13-1957	M		Blue Zinc	13.00mm	6.00mm	5.00mm	16.00mm	M8 x 1.25	Full Thread	.0090 kg
11-2525	M		Black Zinc	18.00mm	8.00mm	8.00mm	25.00mm	M12 x 1.75	Full Thread	.0279 kg

Flanged Hex Head Bolt (FHHB)

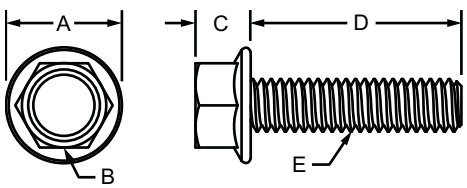

Part No.	Series	Material	Finish	A	B	C	D (Length)	E (Thread)	Thread Length	Weight
3747	F	Steel	Bright Zinc	.680"	1/2	.320"	.500"	5/16-18	Full Thread	.025 lb
3748	F			.680"	1/2	.320"	.750"	5/16-18	Full Thread	.027 lb
3749	F			.680"	1/2	.320"	1.000"	5/16-18	Full Thread	.029 lb
3750	F			.680"	1/2	.320"	1.250"	5/16-18	Full Thread	.038 lb
3751	F			.680"	1/2	.320"	1.500"	5/16-18	Full Thread	.043 lb
3752	F			.680"	1/2	.320"	1.750"	5/16-18	Full Thread	.044 lb
3753	F			.680"	1/2	.320"	2.000"	5/16-18	Full Thread	.049 lb
3754	F			.680"	1/2	.320"	2.250"	5/16-18	Full Thread	.052 lb
3755	F			.680"	1/2	.320"	3.500"	5/16-18	Full Thread	.075 lb
13-3753	M		Bright Blue Zinc	17.40mm	12.00mm	8.10mm	50.00mm	M8 x 1.25	22.00mm	.0249 kg

Connecting Screws (CS)

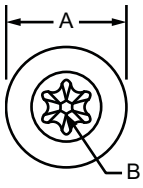

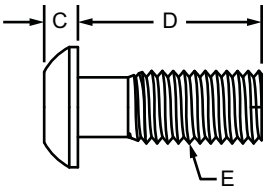

Bright Zinc

Part No.	Series	Material	Finish	A	B	C	D (Length)	E (Thread)	Thread Length	Weight
13003	M	Steel	Bright Zinc	19.50mm	8.00mm HEX	6.00mm	30.00mm	M12 x 1.75	23.00mm	.0277 kg
13006*	M			20.00mm	T-50	6.00mm	30.00mm	M10.6 x 1.5*	23.00mm	.0249 kg
13004	M			20.00mm	T-50	6.00mm	30.00mm	M12 x 1.75	22.25mm	.0281 kg

* Tri-Lobe Thread Forming Screw

Self Tapping Screw (STS)

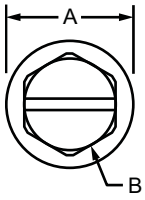

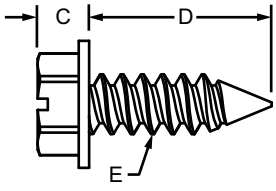

Bright Zinc

Part No.	Series	Material	Finish	A	B	C	D (Length)	E (Thread)	Weight
9320	F	Steel	Bright Zinc	.500”	1/4	.141”	.500”	#8-18	.003 lb
9301	F			.350”	1/4	.141”	.625”	#8-18	.003 lb
9306	F			.500”	3/8	.240”	.625”	1/4-14	.010 lb

Self Drilling Screw (SDS)

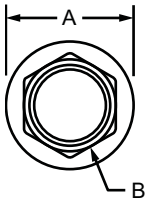

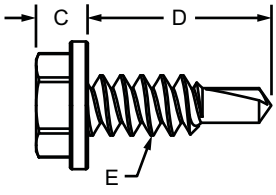

Bright Zinc

Part No.	Series	Material	Finish	A	B	C	D (Length)	E (Thread)	Weight
9325	F	Steel	Bright Zinc	.350”	1/4	.141”	.500”	#8-18	.003 lb
9302	F			.350”	1/4	.141”	.675”	#8-18	.003 lb
9307	F			.500”	3/8	.240”	.750”	1/4-14	.013 lb

Threaded Insert:

The threaded insert allows 45 series pivot joints to be mounted to a 45 series profile end. The insert is formed through thread rolling, creating strong, uniform, and accurate external threads. It has high tensile, shear, and fatigue strength. Use a ¼ inch hex tool (see page 909).

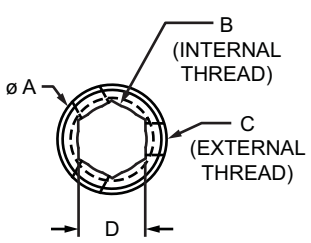

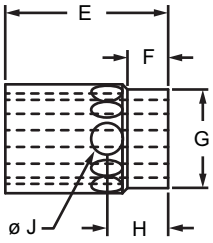

Part No.	Series	A	B (Thread)	C (Thread)	D	E (Length)	F	G	H	J	Weight
14196	M	10.70mm	M8 x 1.25	10.70mm	6.60mm	16.00mm	4.00mm	9.70mm	6.00mm	3.10mm	.0039 kg

Material Specifications

Material	Finish	Process
Steel	Bright Zinc	Metal Forming

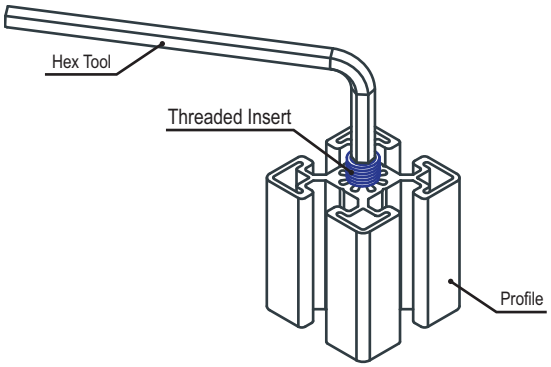

Bearing Pad Screw

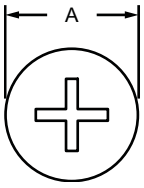

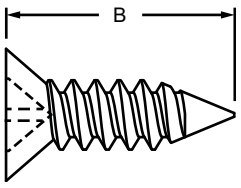

Part No.	Series	Material	Finish	Process	A	B (Length)	Standard Size	Weight
3625	10	Stainless-Steel	Stainless	Formed	.332"	.375"	#8 FHS	.001 lb
3626	10				.332"	.500"	#8 FHS	.002 lb
3628	15				.362"	.625"	#10 FHS	.003 lb
25-3625	25				8.43mm	9.53mm	#8 FHS	.0008 kg
25-3626	25				8.43mm	12.70mm	#8 FHS	.0012 kg
40-3628	40				9.19mm	15.88mm	#10 FHS	.0015 kg
40-3629	40				9.19mm	19.05mm	#10 FHS	.0020 kg

Shoulder Bolt

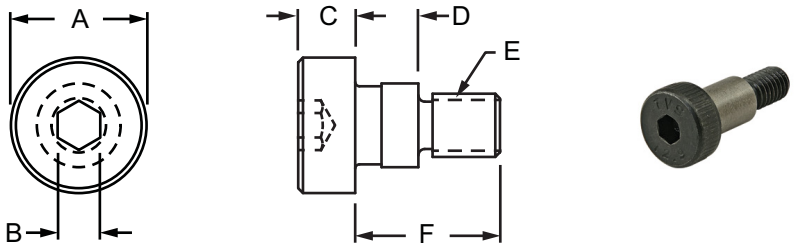

Part No.	Series	Material	Finish	A	B	C	D	E (Thread)	F	Weight
13-2247	M	Steel	Black Zinc	13.00mm	4.00mm	5.50mm	6.00mm	M6 x 1.0	14.00mm	.0100 kg
13-1914	M			13.00mm	4.00mm	5.50mm	12.00mm	M6 x 1.0	23.25mm	.0116 kg
13-1922	M			16.00mm	5.00mm	7.00mm	20.00mm	M10 x 1.5	33.25mm	.0255 kg

Shoulder Bolt with Washer

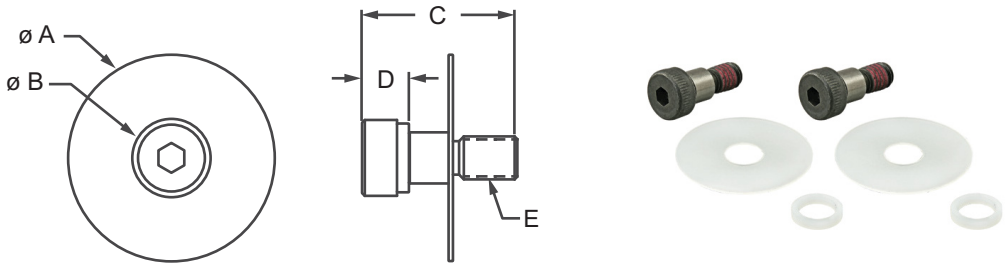

Part No.	Series	Bolt Material	Bolt Finish	Washer Material	Washer Finish	A	B	C	D	E (Thread)	Weight
3501	10	Steel	Black Zinc	Plastic	White Nylon	1.000"	.435"	.759"	.246"	1/4-20	.073 lb
3500	15					1.500"	.552"	1.109"	.341"	5/16-18	.035 lb
25-3501	25					25.40mm	13.84mm	19.16mm	6.98mm	M6 X 1.0	.018 kg
40-3500	40					38.10mm	19.23mm	30.25mm	10.18mm	M8 X 1.25	.064 kg

*Assembly comprised of (2) Shoulder Bolts and (4) Plastic Washers

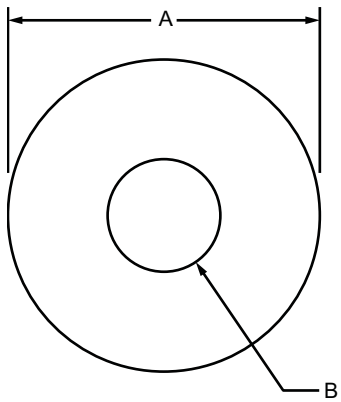

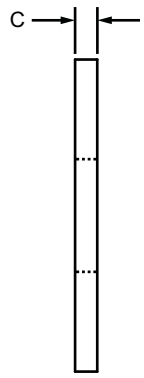

Part No.	Series	Material	Finish	Type	Mfg Standard	A	B	C	Weight
3006	F	Steel	Black Zinc	SAE Flat	ANSI B18.22.1	.438"	.188"	.049"	.001 lb
3055	F	Steel	Black Zinc	SAE Flat	ANSI B18.22.1	.505"	.221"	.051"	.002 lb
3258	F	Steel	Black Zinc	SAE Flat	ANSI B18.22.1	.625"	.286"	.066"	.004 lb
3260	F	Steel	Black Zinc	SAE Flat	ANSI B18.22.1	.692"	.349"	.066"	.004 lb
3261	F	Steel	Black Zinc	SAE Flat	ANSI B18.22.1	.816"	.410"	.066"	.006 lb
3262	F	Steel	Black Zinc	SAE Flat	ANSI B18.22.1	1.062"	.531"	.095"	.015 lb
3760	F	Steel	Bright Zinc	SAE Flat	ANSI B18.22.1	.692"	.349"	.066"	.006 lb
3762	F	Steel	Bright Zinc	SAE Flat	ANSI B18.22.1	1.000"	.449"	.068"	.013 lb
3764	F	Steel	Bright Zinc	SAE Flat	ANSI B18.22.1	1.387"	.567"	.109"	.038 lb
3658	F	Stainless-Steel	Stainless	SAE Flat	ANSI B18.22.1	.625"	.286"	.066"	.004 lb
3659	F	Stainless-Steel	Stainless	Standard Flat	ISO 7089	.692"	.345"	.045"	.004 lb
3861	F	Steel	Bright Zinc	Standard Flat	ISO 7089	.464"	.256"	.063"	.001 lb
3860	F	Steel	Bright Zinc	Standard Flat	ISO 7089	.621"	.335"	.063"	.003 lb
13-6040	M	Steel	Blue Zinc	Standard Flat	ISO 7089	9.82mm	5.39mm	1.00mm	.0004 kg
13-6041	M	Steel	Blue Zinc	Standard Flat	ISO 7089	11.78mm	6.51mm	1.60mm	.0008 kg
13-6045	M	Steel	Blue Zinc	Standard Flat	DIN 7349	13.00mm	6.87mm	2.70mm	.0022 kg
13-6042	M	Steel	Blue Zinc	Standard Flat	ISO 7089	15.78mm	8.51mm	1.60mm	.0018 kg
13-6043	M	Steel	Blue Zinc	Standard Flat	ISO 7089	19.74mm	10.63mm	2.00mm	.0033 kg
13-6044	M	Steel	Blue Zinc	Standard Flat	ISO 7089	26.25mm	14.25mm	4.00mm	.0109 kg
11-6039	M	Steel	Black Zinc	Standard Flat	ISO 7089	8.82mm	4.39mm	0.80mm	.0003 kg
11-6040	M	Steel	Black Zinc	Standard Flat	ISO 7089	9.60mm	5.30mm	1.00mm	.0004 kg
11-6041	M	Steel	Black Zinc	Standard Flat	ISO 7089	11.78mm	6.51mm	1.60mm	.0009 kg
11-6042	M	Steel	Black Zinc	Standard Flat	ISO 7089	15.78mm	8.51mm	1.60mm	.0013 kg
17-6041	M	Stainless-Steel	Stainless	Standard Flat	ISO 7089	11.78mm	6.51mm	1.60mm	.0009 kg
17-6042	M	Stainless-Steel	Stainless	Standard Flat	ISO 7089	15.78mm	8.51mm	1.60mm	.0013 kg
19-6041	M	Steel	Bright Zinc	Standard Flat	ISO 7089	11.78mm	6.51mm	1.60mm	.0009 kg
19-6042	M	Steel	Bright Zinc	Standard Flat	ISO 7089	15.78mm	8.51mm	1.60mm	.0018 kg
25-3502	M	Plastic	White Nylon	—	—	13.84mm	9.22mm	1.27mm	.0001 kg
25-3503	M	Plastic	White Nylon	—	—	13.84mm	9.22mm	2.01mm	.0002 kg
40-3503	M	Plastic	White Nylon	—	—	19.48mm	10.26mm	4.01mm	.0009 kg
65-3258	M	Steel	Black Zinc	SAE Flat	ANSI B18.22.1	16.00mm	7.40mm	1.52mm	.0015 kg
65-3260	M	Steel	Black Zinc	SAE Flat	ANSI B18.22.1	17.35mm	8.86mm	1.66mm	.0018 kg

Hex Nut

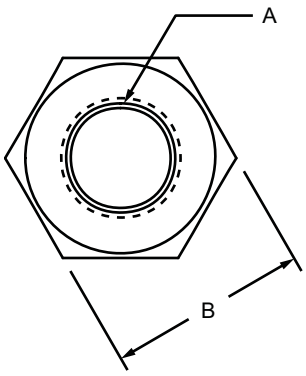

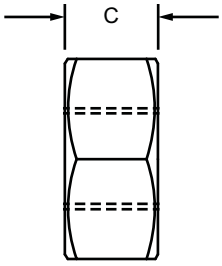

Part No.	Series	Material	Finish	Type	Mfg Standard	A (Thread)	B	C	Weight
3007	F	Steel	Black Zinc	Finished Hex Nut	ANSI/ASME B18.2.2	8-32	.338"	.123"	.002 lb
3053	F	Steel	Black Zinc	Machine Screw	ANSI/ASME B18.6.3	10-32	.368"	.123"	.003 lb
3208	F	Steel	Black Zinc	Finished Hex Nut	ANSI/ASME B18.2.2	1/4-20	.433"	.219"	.007 lb
3214	F	Steel	Black Zinc	Finished Hex Nut	ANSI/ASME B18.2.2	5/16-18	.494"	.265"	.010 lb
3215	F	Steel	Black Zinc	Finished Hex Nut	ANSI/ASME B18.2.2	3/8 - 16	.563"	.328"	.015 lb
3714	F	Steel	Bright Zinc	Finished Hex Nut	ANSI/ASME B18.2.2	5/16-18	.494"	.265"	.010 lb
3709	F	Steel	Bright Zinc	Finished Hex Nut	ANSI/ASME B18.2.2	1/2-13	.743"	.437"	.035 lb
3656	F	Stainless-Steel	Stainless	Finished Hex Nut	ANSI/ASME B18.2.2	1/4-20	.433"	.219"	.007 lb
3657	F	Stainless-Steel	Stainless	Finished Hex Nut	ANSI/ASME B18.2.2	5/16-18	.494"	.265"	.010 lb
3820	F	Steel	Bright Zinc	Hex Nut	DIN 934	M6 x 1.0	.389"	.191"	.005 lb
3821	F	Steel	Bright Zinc	Hex Nut	DIN 934	M8 x 1.25	.506"	.248"	.010 lb
13-5065	M	Steel	Blue Zinc	Hex Nut	DIN 934	M5 x 0.8	7.89mm	3.95mm	.0010 kg
13-6065	M	Steel	Blue Zinc	Hex Nut	DIN 934	M6 x 1.0	9.89mm	4.85mm	.0022 kg
13-8065	M	Steel	Blue Zinc	Hex Nut	DIN 934	M8 x 1.25	12.86mm	6.32mm	.0045 kg
13-2065	M	Steel	Blue Zinc	Hex Nut	ISO 4033	M12 x 1.75	17.86mm	11.78mm	.0086 kg
11-4065	M	Steel	Black Zinc	Hex Nut	DIN 934	M4 x 0.7	6.89mm	3.10mm	.0007 kg
11-5065	M	Steel	Black Zinc	Hex Nut	DIN 934	M5 x 0.8	7.89mm	3.85mm	.0010 kg
11-6065	M	Steel	Black Zinc	Hex Nut	DIN 934	M6 x 1.0	9.89mm	4.85mm	.0022 kg
11-8065	M	Steel	Black Zinc	Hex Nut	DIN 934	M8 x 1.25	12.86mm	6.32mm	.0045 kg
17-6065	M	Stainless-Steel	Stainless	Hex Nut	DIN 934	M6 x 1.0	9.89mm	4.85mm	.0022 kg
17-1065	M	Stainless-Steel	Stainless	Hex Nut	DIN 934	M10 x 1.5	16.87mm	7.82mm	.0104 kg
19-6065	M	Steel	Bright Zinc	Hex Nut	DIN 934	M6 x 1.0	9.89mm	4.85mm	.0022 kg
19-8065	M	Steel	Bright Zinc	Hex Nut	DIN 934	M8 x 1.25	12.86mm	6.32mm	.0045 kg
19-1065	M	Steel	Bright Zinc	Hex Nut	DIN 934	M10 x 1.5	16.87mm	7.82mm	.0104 kg
19-2065	M	Steel	Bright Zinc	Hex Nut	DIN 934	M12 x 1.75	19.00mm	10.00mm	.0151 kg
65-3208	M	Steel	Black Zinc	Finished Hex Nut	ANSI/ASME B18.2.2	1/4-20	10.90mm	5.45mm	.0031 kg
65-3214	M	Steel	Black Zinc	Finished Hex Nut	ANSI/ASME B18.2.2	5/16-18	12.50mm	6.70mm	.0045 kg

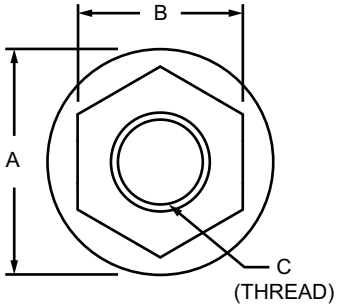

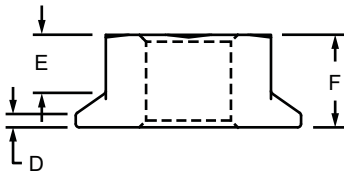

Part No.	Series	Material	Grade	Finish	Nylock	A	B	C (Thread)	D	E	F	Weight
3758	F RT	Steel	Class 8	Bright Zinc	Yes	.670"	.500"	5/16-18	.040"	.170"	.275"	.013 lb
3759	F RT			Bright Zinc	No	.670"	.500"	5/16-18	.040"	.170"	.275"	.013 lb
14156	M			Bright Blue Zinc	No	14.20mm	10.00mm	M6 x 1.0	1.10mm	3.10mm	6.00mm	.0034 kg
13-3758	M RT			Bright Blue Zinc	Yes	17.90mm	13.00mm	M8 x 1.25	1.20mm	4.50mm	8.00mm	.0071 kg
13-3759	M RT			Bright Blue Zinc	No	17.90mm	13.00mm	M8 x 1.25	1.20mm	4.50mm	8.00mm	.0073 kg

Slide-In Flanged Economy T-Slot Stud

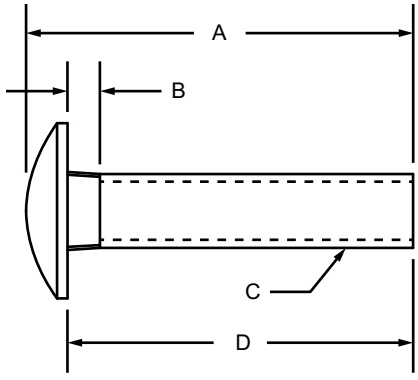

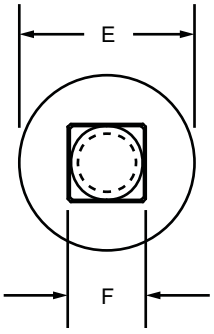

Part No.	Series	Material	Finish	A	B	C (Thread)	D (Length)	E	F	Weight
3115	10	Steel	Black Zinc	.875"	.140"	1/4-20	.750"	.500"	.235"	.013 lb
3116	15	Steel	Black Zinc	.898"	.135"	5/16-18	.750"	.700"	.308"	.025 lb
3851	15	Steel	Bright Zinc	.945"	.135"	M8 x 1.25	.787"	.700"	.308"	.027 lb
3120	15	Steel	Black Zinc	1.153"	.135"	5/16-18	1.000"	.700"	.308"	.031 lb
3852	15	Steel	Bright Zinc	1.145"	.135"	M8 x 1.25	.984"	.700"	.308"	.030 lb
3126	15	Steel	Black Zinc	1.405"	.135"	5/16-18	1.250"	.700"	.308"	.034 lb
3853	15	Steel	Bright Zinc	1.350"	.135"	M8 x 1.25	1.181"	.700"	.308"	.033 lb
3134	15	Steel	Black Zinc	1.650"	.135"	5/16-18	1.500"	.700"	.308"	.037 lb
3854	15	Steel	Bright Zinc	1.530"	.135"	M8 x 1.25	1.378"	.700"	.308"	.038 lb
3288	15	Steel	Black Zinc	1.905"	.135"	5/16-18	1.750"	.700"	.308"	.042 lb
3857	15	Steel	Bright Zinc	1.920"	.135"	M8 x 1.25	1.772"	.700"	.308"	.045 lb
3290	15	Steel	Black Zinc	2.145"	.135"	5/16-18	2.000"	.700"	.308"	.046 lb
19-8920	40	Steel	Bright Zinc	23.90mm	3.50mm	M8 x 1.25	20.00mm	17.75mm	7.80mm	.0126 kg
19-8925	40	Steel	Bright Zinc	29.00mm	3.50mm	M8 x 1.25	25.00mm	17.75mm	7.80mm	.0137 kg
19-8930	40	Steel	Bright Zinc	34.50mm	3.50mm	M8 x 1.25	30.00mm	17.75mm	7.80mm	.0149 kg
19-8935	40	Steel	Bright Zinc	38.90mm	3.50mm	M8 x 1.25	35.00mm	17.75mm	7.80mm	.0172 kg
19-8945	40	Steel	Bright Zinc	49.00mm	3.50mm	M8 x 1.25	45.00mm	17.75mm	7.80mm	.0202 kg
40-3116	40	Steel	Black Zinc	22.75mm	3.50mm	5/16-18	19.05mm	17.75mm	7.80mm	.0116 kg
40-3120	40	Steel	Black Zinc	29.00mm	3.50mm	5/16-18	25.40mm	17.75mm	7.80mm	.0134 kg
40-3126	40	Steel	Black Zinc	35.75mm	3.50mm	5/16-18	31.75mm	17.75mm	7.80mm	.0149 kg
40-3134	40	Steel	Black Zinc	42.00mm	3.50mm	5/16-18	38.10mm	17.75mm	7.80mm	.0172 kg
40-3290	40	Steel	Black Zinc	54.75mm	3.50mm	5/16-18	50.80mm	17.75mm	7.80mm	.0209 kg

Drop-In T-Slot Stud Assembly

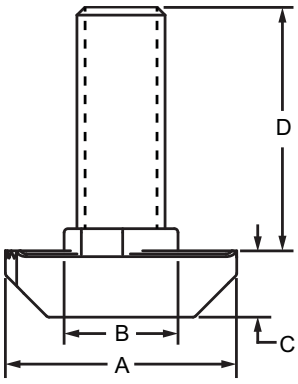

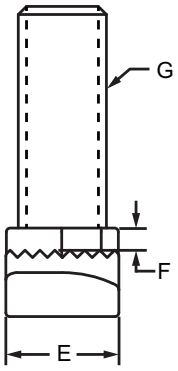

Part No.	Series	Material	Finish	A	B	C	D (Length)	E	F	G (Thread)	Weight
13135	30	Stainless-Steel	Stainless	16.00mm	7.70mm	4.50mm	20.00mm	7.70mm	1.50mm	M6 x 1.0	.0076 kg
13137	30	Stainless-Steel	Stainless	16.00mm	7.70mm	4.50mm	25.00mm	7.70mm	1.50mm	M6 x 1.0	.0082 kg
13139	30	Stainless-Steel	Stainless	16.00mm	7.70mm	4.50mm	30.00mm	7.70mm	1.50mm	M6 x 1.0	.0095 kg
13141	30	Stainless-Steel	Stainless	16.00mm	7.70mm	4.50mm	40.00mm	7.70mm	1.50mm	M6 x 1.0	.0112 kg
13143	30	Stainless-Steel	Stainless	16.00mm	7.70mm	4.50mm	60.00mm	7.70mm	1.50mm	M6 x 1.0	.0147 kg
13134	30	Steel	Bright Zinc	16.00mm	7.70mm	4.50mm	20.00mm	7.70mm	1.50mm	M6 x 1.0	.0073 kg
13136	30	Steel	Bright Zinc	16.00mm	7.70mm	4.50mm	25.00mm	7.70mm	1.50mm	M6 x 1.0	.0078 kg
13138	30	Steel	Bright Zinc	16.00mm	7.70mm	4.50mm	30.00mm	7.70mm	1.50mm	M6 x 1.0	.0093 kg
13140	30	Steel	Bright Zinc	16.00mm	7.70mm	4.50mm	40.00mm	7.70mm	1.50mm	M6 x 1.0	.0104 kg
13142	30	Steel	Bright Zinc	16.00mm	7.70mm	4.50mm	60.00mm	7.70mm	1.50mm	M6 x 1.0	.0138 kg
13144	15 40	Steel	Bright Zinc	15.75mm	7.75mm	4.50mm	20.00mm	7.80mm	3.00mm	M6 x 1.0	.0075 kg
13145	15 40	Steel	Bright Zinc	15.75mm	7.75mm	4.50mm	25.00mm	7.80mm	3.00mm	M6 x 1.0	.0083 kg
13146	15 40	Steel	Bright Zinc	15.75mm	7.75mm	4.50mm	30.00mm	7.80mm	3.00mm	M6 x 1.0	.0093 kg
13147	15 40	Steel	Bright Zinc	15.75mm	7.75mm	4.50mm	40.00mm	7.80mm	3.00mm	M6 x 1.0	.0108 kg
13148	15 40	Steel	Bright Zinc	15.75mm	7.75mm	4.50mm	60.00mm	7.80mm	3.00mm	M6 x 1.0	.0147 kg
13169	45	Steel	Bright Zinc	19.00mm	9.70mm	5.80mm	20.00mm	9.70mm	3.00mm	M8 x 1.25	.0132 kg
13171	45	Steel	Bright Zinc	19.00mm	9.70mm	5.80mm	25.00mm	9.70mm	3.00mm	M8 x 1.25	.0146 kg
13173	45	Steel	Bright Zinc	19.00mm	9.70mm	5.80mm	30.00mm	9.70mm	3.00mm	M8 x 1.25	.0159 kg
13175	45	Steel	Bright Zinc	19.00mm	9.70mm	5.80mm	40.00mm	9.70mm	3.00mm	M8 x 1.25	.0187 kg
13177	45	Steel	Bright Zinc	19.00mm	9.70mm	5.80mm	60.00mm	9.70mm	3.00mm	M8 x 1.25	.0253 kg
13170	45	Stainless-Steel	Stainless	19.00mm	9.70mm	5.80mm	20.00mm	9.70mm	3.00mm	M8 x 1.25	.0136 kg
13172	45	Stainless-Steel	Stainless	19.00mm	9.70mm	5.80mm	25.00mm	9.70mm	3.00mm	M8 x 1.25	.0106 kg
13174	45	Stainless-Steel	Stainless	19.00mm	9.70mm	5.80mm	30.00mm	9.70mm	3.00mm	M8 x 1.25	.0154 kg
13176	45	Stainless-Steel	Stainless	19.00mm	9.70mm	5.80mm	40.00mm	9.70mm	3.00mm	M8 x 1.25	.0191 kg
13178	45	Stainless-Steel	Stainless	19.00mm	9.70mm	5.80mm	60.00mm	9.70mm	3.00mm	M8 x 1.25	.0258 kg

Drop-In T-Slot Stud

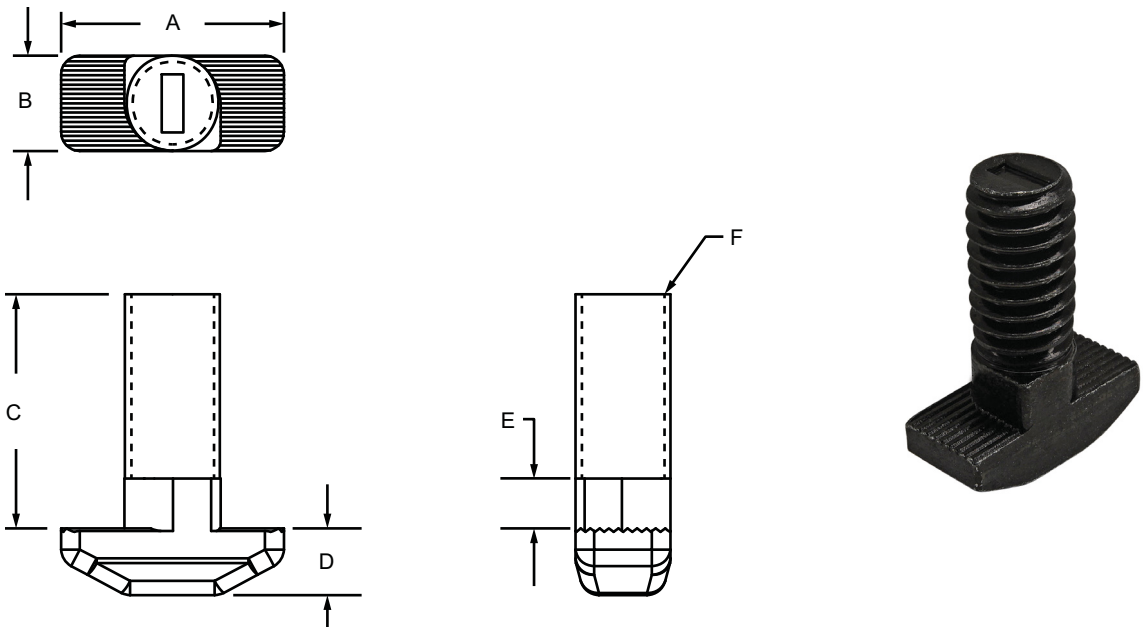

Part No.	Series	Material	Finish	A	B	C (Length)	D	E	F (Thread)	Weight
3293	15	Steel	Black Zinc	.713"	.305"	.750"	.213"	.160"	5/16-18	.024 lb
3295	15			.713"	.305"	1.000"	.213"	.160"	5/16-18	.027 lb
3297	15			.713"	.305"	1.250"	.213"	.160"	5/16-18	.032 lb
3299	15			.713"	.305"	1.500"	.213"	.160"	5/16-18	.036 lb

Drop-In T-Slot Stud with Flanged Hex Nut

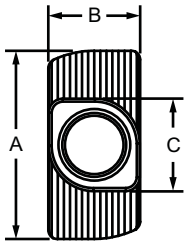

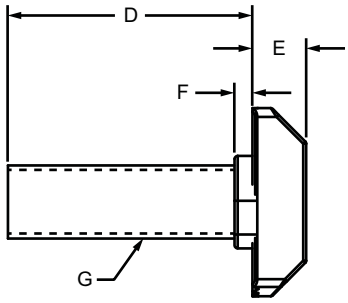

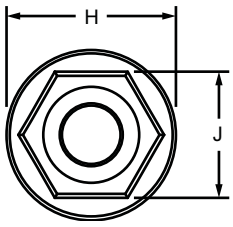

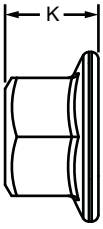

Part No.	Series	Material	Finish	A	B	C	D	E	F	G	H	J	K	Weight
75-3633	30	Steel	Bright / Blue Zinc	15.75mm	7.75mm	7.80mm	20.00mm	4.50mm	1.50mm	M6 x 1.0	14.20mm	9.89mm	5.85mm	.0104 kg
75-3636	30			16.00mm	7.70mm	7.70mm	25.00mm	4.50mm	1.50mm	M6 x 1.0	14.20mm	9.89mm	5.85mm	.0109 kg
75-3637	30			16.00mm	7.70mm	7.70mm	30.00mm	4.50mm	1.50mm	M6 x 1.0	14.20mm	9.89mm	5.85mm	.0123 kg
75-3632	45			19.00mm	9.70mm	9.70mm	20.00mm	5.80mm	3.00mm	M8 x 1.25	17.90mm	13.00mm	7.80mm	.0203 kg
75-3635	45			19.00mm	9.70mm	9.70mm	25.00mm	5.80mm	3.00mm	M8 x 1.25	17.90mm	13.00mm	7.80mm	.0260 kg
75-3638	45			19.00mm	9.70mm	9.70mm	30.00mm	5.80mm	3.00mm	M8 x 1.25	17.90mm	13.00mm	7.80mm	.0072 kg

Slide-In Economy T-Slot Stud

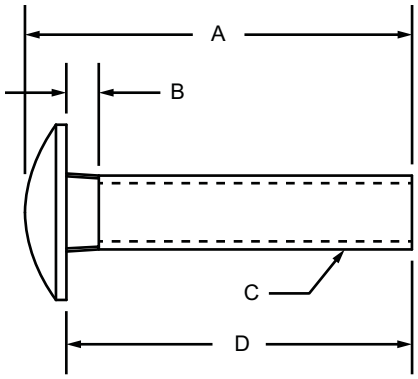

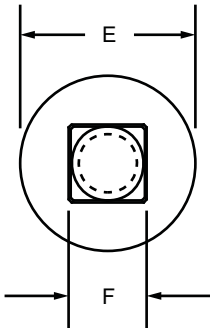

Part No.	Series	Material	Finish	A	B	C (Thread)	D (Length)	E	F	Weight
3716	15	Steel	Bright Zinc	.910"	.160"	5/16-18	.750"	.695"	.310"	.026 lb
3720	15			1.160"	.160"	5/16-18	1.000"	.695"	.310"	.029 lb

1/4-20 Button Head Socket Cap Screw (BHSCS)

Assy. No.	Bolt	Qty.	Bolt Type	Thread Size	Bolt Length	Nut	Qty.	Nut Type	Washer	Qty.	Weight
3520	3059	1	BHSCS	1/4-20	.375"	3376	1	Roll-In T-Nut with Flex Handle	—	—	.015 lb
3416	3059	1			.375"	3382	1	Slide-In Economy T-Nut - Centered Thread	—	—	.026 lb
3394	3061	1			.500"	3376	1	Roll-In T-Nut with Flex Handle	—	—	.021 lb
3399	3061	1			.500"	3376	1	Roll-In T-Nut with Flex Handle	3258	1	.020 lb
75-3801	3061	1			.500"	3376	1	Roll-In T-Nut with Flex Handle	—	—	.016 lb
75-3807	3061	1			.500"	3376	1	Roll-In T-Nut with Flex Handle	3258	1	.020 lb
3521	3061	1			.500"	3376	1	Roll-In T-Nut with Flex Handle	—	—	.016 lb
3393	3061	1			.500"	3382	1	Slide-In Economy T-Nut - Centered Thread	—	—	.017 lb
3398	3061	1			.500"	3382	1	Slide-In Economy T-Nut - Centered Thread	3258	1	.021 lb
75-3800	3061	1			.500"	3382	1	Slide-In Economy T-Nut - Centered Thread	—	—	.017 lb
75-3806	3061	1			.500"	3382	1	Slide-In Economy T-Nut - Centered Thread	3258	1	.021 lb
3408	3061	1			.500"	14165	1	Standard Drop-In T-Nut	—	—	.016 lb
3484	3063	1			.625"	3376	1	Roll-In T-Nut with Flex Handle	3258	1	.020 lb
75-3803	3063	1			.625"	3376	1	Roll-In T-Nut with Flex Handle	—	—	.017 lb
75-3809	3063	1			.625"	3376	1	Roll-In T-Nut with Flex Handle	3258	1	.020 lb
3522	3063	1			.625"	3376	1	Roll-In T-Nut with Flex Handle	—	—	.018 lb
3418	3063	1			.625"	3286	1	Slide-In Economy T-Nut - Centered Thread	—	—	.018 lb
3482	3063	1			.625"	3382	1	Slide-In Economy T-Nut - Centered Thread	3258	1	.022 lb
3647*	3663	1			.625"	3686	1	Slide-In Economy T-Nut - Centered Thread	3658	1	.025 lb
75-3802	3063	1			.625"	3382	1	Slide-In Economy T-Nut - Centered Thread	—	—	.018 lb
75-3808	3063	1			.625"	3382	1	Slide-In Economy T-Nut - Centered Thread	3258	1	.022 lb
3367	3063	1			.625"	—	—	—	3258	1	.012 lb
3469	3065	1			.750"	3208	1	Hex Nut	3258	1	.020 lb
3372	3065	1			.750"	3376	1	Roll-In T-Nut with Flex Handle	3258	1	.021 lb
75-3805	3065	1			.750"	3376	1	Roll-In T-Nut with Flex Handle	—	—	.019 lb
75-3811	3065	1			.750"	3376	1	Roll-In T-Nut with Flex Handle	3258	1	.021 lb
3523	3065	1			.750"	3376	1	Roll-In T-Nut with Flex Handle	—	—	.018 lb
3371	3065	1			.750"	3382	1	Slide-In Economy T-Nut - Centered Thread	3258	1	.036 lb
75-3804	3065	1			.750"	3382	1	Slide-In Economy T-Nut - Centered Thread	—	—	.020 lb
75-3810	3065	1			.750"	3382	1	Slide-In Economy T-Nut - Centered Thread	3258	1	.023 lb
3479	3065	1			.750"	3204	1	Standard Slide-In T-Nut	—	—	.018 lb
3388	3065	1			.750"	—	—	—	3258	1	.014 lb

*Assembly comprised of stainless steel (SS) hardware

CONTINUE

1/4-20 Flanged Button Head Socket Cap Screw (FBHSCS)

Assy. No.	Bolt	Qty.	Bolt Type	Thread Size	Bolt Length	Nut	Qty.	Nut Type	Washer	Qty.	Weight
3002	3390	2	FBHSCS	1/4-20	.375"	3280	1	Double Slide-In Economy T-Nut	—	—	.034 lb
3387	3390	1			.375"	3376	1	Roll-In T-Nut with Flex Handle	—	—	.015 lb
3480	3390	1			.375"	3376	1	Roll-In T-Nut with Flex Handle	—	—	.015 lb
3386	3390	1			.375"	3382	1	Slide-In Economy T-Nut - Centered Thread	—	—	.016 lb
3356	3342	2			.500"	3280	1	Double Slide-In Economy T-Nut	—	—	.037 lb
3465	3342	1			.500"	3208	1	Hex Nut	—	—	.016 lb
3481	3342	1			.500"	3376	1	Roll-In T-Nut with Flex Handle	—	—	.017 lb
3322	3342	1			.500"	3283	1	Roll-In T-Nut with Flex Handle	—	—	.033 lb
3321	3342	1			.500"	3382	1	Slide-In Economy T-Nut - Centered Thread	—	—	.018 lb
3358	3342	3			.500"	3287	1	Triple Slide-In Economy T-Nut	—	—	.052 lb
3004	3066	1			.750"	3208	1	Hex Nut	3258	1	.022 lb
3385	3066	1			.750"	3376	1	Roll-In T-Nut with Flex Handle	—	—	.037 lb
3485	3066	1			.750"	3376	1	Roll-In T-Nut with Flex Handle	—	—	.019 lb
3384	3066	1			.750"	3382	1	Slide-In Economy T-Nut - Centered Thread	—	—	.020 lb

1/4-20 Flat Head Socket Cap Screw (FHSCS)

Assy. No.	Bolt	Qty.	Bolt Type	Thread Size	Bolt Length	Nut	Qty.	Nut Type	Washer	Qty.	Weight
3415	3400	1	FHSCS	1/4-20	.500"	3376	1	Roll-In T-Nut with Flex Handle	—	—	.016 lb
3639*	3645	1			.500"	3624	1	Roll-In T-Nut with Flex Handle	—	—	.016 lb
3533	3400	1			.500"	3283	1	Roll-In T-Nut with Flex Handle	—	—	.028 lb
3532	3400	1			.500"	3283	1	Roll-In T-Nut with Flex Handle	—	—	.032 lb
3414	3400	1			.500"	3382	1	Slide-In Economy T-Nut - Centered Thread	—	—	.018 lb
3419	3400	1			.500"	3204	1	Standard Slide-In T-Nut	—	—	.019 lb
3524	3405	1			.625"	3376	1	Roll-In T-Nut with Flex Handle	—	—	.017 lb
3409	3405	1			.625"	14165	1	Standard Drop-In T-Nut	—	—	.017 lb
3417	3406	1			.750"	3208	1	Hex Nut	3258	1	.022 lb
3525	3406	1			.750"	3376	1	Roll-In T-Nut with Flex Handle	—	—	.019 lb
3534	3406	1			.750"	3283	1	Roll-In T-Nut with Flex Handle	—	—	.029 lb
3407	3406	1			.750"	14165	1	Standard Drop-In T-Nut	—	—	.019 lb

*Assembly comprised of stainless steel (SS) hardware

1/4-20 Socket Head Cap Screw (SHCS)

Assy. No.	Bolt	Qty.	Bolt Type	Thread Size	Bolt Length	Nut	Qty.	Nut Type	Washer	Qty.	Weight
3490	3058	1	SHCS	1/4-20	.375"	3376	1	Roll-In T-Nut with Flex Handle	—	—	.017 lb
3486	3058	1			.375"	3382	1	Slide-In Economy T-Nut - Centered Thread	—	—	.019 lb
3492	3062	1			.500"	3376	1	Roll-In T-Nut with Flex Handle	—	—	.018 lb
3496	3062	1			.500"	3376	1	Roll-In T-Nut with Flex Handle	3258	1	.022 lb
75-3813	3062	1			.500"	3376	1	Roll-In T-Nut with Flex Handle	—	—	.018 lb
75-3821	3062	1			.500"	3376	1	Roll-In T-Nut with Flex Handle	3258	1	.022 lb
3491	3062	1			.500"	3382	1	Slide-In Economy T-Nut - Centered Thread	—	—	.020 lb
3495	3062	1			.500"	3382	1	Slide-In Economy T-Nut - Centered Thread	3258	1	.024 lb
75-3812	3062	1			.500"	3382	1	Slide-In Economy T-Nut - Centered Thread	—	—	.020 lb
75-3820	3062	1			.500"	3382	1	Slide-In Economy T-Nut - Centered Thread	3258	1	.024 lb
3494	3067	1			.625"	3376	1	Roll-In T-Nut with Flex Handle	—	—	.020 lb
3498	3067	1			.625"	3376	1	Roll-In T-Nut with Flex Handle	3258	1	.023 lb

CONTINUE

1/4-20 Socket Head Cap Screw (SHCS)

Assy. No.	Bolt	Qty.	Bolt Type	Thread Size	Bolt Length	Nut	Qty.	Nut Type	Washer	Qty.	Weight
75-3815	3067	1	SHCS	1/4-20	.625"	3376	1	Roll-In T-Nut with Flex Handle	—	—	.020 lb
75-3823	3067	1			.625"	3376	1	Roll-In T-Nut with Flex Handle	3258	1	.023 lb
3493	3067	1			.625"	3382	1	Slide-In Economy T-Nut - Centered Thread	—	—	.021 lb
3497	3067	1			.625"	3382	1	Slide-In Economy T-Nut - Centered Thread	3258	1	.025 lb
75-3814	3067	1			.625"	3382	1	Slide-In Economy T-Nut - Centered Thread	—	—	.021 lb
75-3822	3067	1			.625"	3382	1	Slide-In Economy T-Nut - Centered Thread	3258	1	.025 lb
3397	3064	1			.750"	3376	1	Roll-In T-Nut with Flex Handle	—	—	.021 lb
75-3817	3064	1			.750"	3376	1	Roll-In T-Nut with Flex Handle	—	—	.021 lb
75-3825	3064	1			.750"	3376	1	Roll-In T-Nut with Flex Handle	3258	1	.024 lb
3304	3064	1			.750"	3382	1	Slide-In Economy T-Nut - Centered Thread	—	—	.025 lb
75-3816	3064	1			.750"	3382	1	Slide-In Economy T-Nut - Centered Thread	—	—	.025 lb
75-3824	3064	1			.750"	3382	1	Slide-In Economy T-Nut - Centered Thread	3258	1	.026 lb
3315	3068	1			.875"	3208	1	Hex Nut	3258	1	.025 lb
3305	3068	1			.875"	3382	1	Slide-In Economy T-Nut - Centered Thread	—	—	.024 lb
3471	3068	1			.875"	3382	1	Slide-In Economy T-Nut - Centered Thread	3258	1	.027 lb
75-3819	3071	1			1.000"	3376	1	Roll-In T-Nut with Flex Handle	—	—	.023 lb
3306	3071	1			1.000"	3382	1	Slide-In Economy T-Nut - Centered Thread	—	—	.025 lb
75-3818	3071	1			1.000"	3382	1	Slide-In Economy T-Nut - Centered Thread	—	—	.025 lb
3307	3072	1			1.250"	3382	1	Slide-In Economy T-Nut - Centered Thread	—	—	.027 lb
3308	3080	1			1.500"	3382	1	Slide-In Economy T-Nut - Centered Thread	—	—	.041 lb
3432	3080	1			1.500"	3382	1	Slide-In Economy T-Nut - Centered Thread	3258	1	.020 lb
3433	3081	1			2.125"	3382	1	Slide-In Economy T-Nut - Centered Thread	3258	1	.027 lb
3434	3082	1			2.500"	3382	1	Slide-In Economy T-Nut - Centered Thread	—	—	.044 lb

5/16-18 Button Head Socket Cap Screw (BHSCS)

Assy. No.	Bolt	Qty.	Bolt Type	Thread Size	Bolt Length	Nut	Qty.	Nut Type	Washer	Qty.	Weight
3526	3104	1	BHSCS	5/16-18	.500"	3282	1	Roll-In T-Nut with Flex Handle	—	—	.036 lb
3437	3111	1			.625"	3282	1	Roll-In T-Nut with Flex Handle	3260	1	.043 lb
3618*	3611	1			.625"	3600	1	Roll-In T-Nut with Flex Handle	3659	1	.042 lb
75-3827	3111	1			.625"	3282	1	Roll-In T-Nut with Flex Handle	—	—	.038 lb
75-3833	3111	1			.625"	3282	1	Roll-In T-Nut with Flex Handle	3260	1	.043 lb
3527	3111	1			.625"	3282	1	Roll-In T-Nut with Flex Handle	—	—	.038 lb
3365	3111	1			.625"	3278	1	Slide-In Economy T-Nut - Offset Thread	—	—	.041 lb
3435	3111	1			.625"	3278	1	Slide-In Economy T-Nut - Offset Thread	3260	1	.045 lb
3461	3111	1			.625"	3278	1	Slide-In Economy T-Nut - Offset Thread	—	—	.041 lb
3620*	3611	1			.625"	3678	1	Slide-In Economy T-Nut - Offset Thread	3659	1	.047 lb
75-3826	3111	1			.625"	3278	1	Slide-In Economy T-Nut - Offset Thread	—	—	.041 lb
75-3832	3111	1			.625"	3278	1	Slide-In Economy T-Nut - Offset Thread	3260	1	.045 lb
3442	3114	1			.750"	3214	1	Hex Nut	3260	1	.033 lb
3467	3114	1			.750"	3214	1	Hex Nut	3260	1	.033 lb
3441	3114	1			.750"	3282	1	Roll-In T-Nut with Flex Handle	3260	1	.044 lb
75-3829	3114	1			.750"	3282	1	Roll-In T-Nut with Flex Handle	—	—	.040 lb
75-3835	3114	1			.750"	3282	1	Roll-In T-Nut with Flex Handle	3260	1	.044 lb
3528	3114	1			.750"	3282	1	Roll-In T-Nut with Flex Handle	—	—	.040 lb

*Assembly comprised of stainless steel (SS) hardware

CONTINUE

5/16-18 Button Head Socket Cap Screw (BHSCS)

Assy. No.	Bolt	Qty.	Bolt Type	Thread Size	Bolt Length	Nut	Qty.	Nut Type	Washer	Qty.	Weight
3439	3114	1	BHSCS	5/16-18	.750"	3278	1	Slide-In Economy T-Nut - Offset Thread	3260	1	.043 lb
3630*	3614	1			.750"	3678	1	Slide-In Economy T-Nut - Offset Thread	3659	1	.050 lb
75-3828	3114	1			.750"	3278	1	Slide-In Economy T-Nut - Offset Thread	—	—	.039 lb
75-3834	3114	1			.750"	3278	1	Slide-In Economy T-Nut - Offset Thread	3260	1	.043 lb
3366	3114	1			.750"	—	—	—	3260	1	.023 lb
3499	3117	1			.875"	—	—	—	3260	1	.024 lb
3445	3118	1			1.000"	3282	1	Roll-In T-Nut with Flex Handle	3260	1	.048 lb
75-3831	3118	1			1.000"	3282	1	Roll-In T-Nut with Flex Handle	—	—	.044 lb
75-3837	3118	1			1.000"	3282	1	Roll-In T-Nut with Flex Handle	3260	1	.048 lb
3443	3118	1			1.000"	3278	1	Slide-In Economy T-Nut - Offset Thread	3260	1	.046 lb
3632*	3621	1			1.000"	3678	1	Slide-In Economy T-Nut - Offset Thread	3659	1	.054 lb
75-3830	3118	1			1.000"	3278	1	Slide-In Economy T-Nut - Offset Thread	—	—	.042 lb
75-3836	3118	1			1.000"	3278	1	Slide-In Economy T-Nut - Offset Thread	3260	1	.046 lb
3971	3945	1			1.750"	3759	1	Flanged Hex Nut	3760	1	.054 lb
3961	3946	1			2.000"	3759	1	Flanged Hex Nut	3760	1	.058 lb

*Assembly comprised of stainless steel (SS) hardware

5/16-18 Drop-in T-Slot Stud

Assy. No.	Bolt	Qty.	Bolt Type	Thread Size	Bolt Length	Nut	Qty.	Nut Type	Washer	Qty.	Weight
3300	3293	1	Drop-in T-Slot Stud	5/16-18	.750"	3214	1	Hex Nut	3260	1	.038 lb
3476	3293	1			.750"	3214	1		3260	1	.038 lb
3301	3295	1			1.000"	3214	1		3260	1	.041 lb
3478	3295	1			1.000"	3214	1		3260	1	.041 lb
3302	3297	1			1.250"	3214	1		3260	1	.046 lb
3303	3299	1			1.500"	3214	1		3260	1	.050 lb

5/16-18 Flat Head Socket Cap Screw (FHSCS)

Assy. No.	Bolt	Qty.	Bolt Type	Thread Size	Bolt Length	Nut	Qty.	Nut Type	Washer	Qty.	Weight
3529	3011	1	FHSCS	5/16-18	.500"	3282	1	Roll-In T-Nut with Flex Handle	—	—	.036 lb
3530	3410	1			.625"	3282	1	Roll-In T-Nut with Flex Handle	—	—	.038 lb
3531	3411	1			.750"	3282	1	Roll-In T-Nut with Flex Handle	—	—	.041 lb
3412	3410	1			.625"	3278	1	Slide-In Economy T-Nut - Offset Thread	—	—	.0361 lb

5/16-18 Flanged Button Head Socket Cap Screw (FBHSCS)

Assy. No.	Bolt	Qty.	Bolt Type	Thread Size	Bolt Length	Nut	Qty.	Nut Type	Washer	Qty.	Weight
3000	3340	2	FBHSCS	5/16-18	.500"	3279	1	Double Slide-In Economy T-Nut	—	—	.094 lb
3318	3340	1			.500"	3282	1	Roll-In T-Nut with Flex Handle	—	—	.038 lb
3319	3340	1			.500"	3278	1	Slide-In Economy T-Nut - Offset Thread	—	—	.037 lb
3355	3330	2			.687"	3279	1	Double Slide-In Economy T-Nut	—	—	.098 lb
3463	3330	1			.687"	3214	1	Hex Nut	3260	1	.033 lb
3323	3330	1			.687"	3282	1	Roll-In T-Nut with Flex Handle	—	—	.041 lb
3320	3330	1			.687"	3278	1	Slide-In Economy T-Nut - Offset Thread	—	—	.039 lb
3357	3330	3			.687"	3285	1	Triple Slide-In Economy T-Nut	—	—	.134 lb

CONTINUE

5/16-18 Flanged Hex Head Bolt

Assy. No.	Bolt	Qty.	Bolt Type	Thread Size	Bolt Length	Nut	Qty.	Nut Type	Washer	Qty.	Weight
3970	3752	1	Flanged Hex Head Bolt	5/16-18	1.750"	3759	1	Flanged Hex Nut	—	—	.058 lb
3960	3753	1			2.000"	3759	1		—	—	.063 lb

5/16-18 Slide-In Economy T-Slot Stud

Assy. No.	Bolt	Qty.	Bolt Type	Thread Size	Bolt Length	Nut	Qty.	Nut Type	Washer	Qty.	Weight
3745	3716	1	Slide-In Economy T-Slot Stud	5/16-18	.750"	3714	1	Hex Nut	3760	1	.042 lb
3737	3720	1		5/16-18	1.000"	3714	1		3760	1	.045 lb

5/16-18 Slide-In Flanged Economy T-Slot Stud

Assy. No.	Bolt	Qty.	Bolt Type	Thread Size	Bolt Length	Nut	Qty.	Nut Type	Washer	Qty.	Weight
3325	3116	1	Slide-In Flanged Economy T-Slot Stud	5/16-18	.750"	3214	1	Hex Nut	3260	1	.039 lb
3150	3120	1		5/16-18	1.000"	3214	1		3260	1	.045 lb
3474	3120	1		5/16-18	1.000"	3214	1		3260	1	.045 lb
3151	3126	1		5/16-18	1.250"	3214	1		3260	1	.048 lb
3152	3134	1		5/16-18	1.500"	3214	1		3260	1	.051 lb
3153	3288	1		5/16-18	1.750"	3214	1		3260	1	.056 lb
3154	3290	1		5/16-18	2.000"	3214	1		3260	1	.060 lb

5/16-18 Socket Head Cap Screw (SHCS)

Assy. No.	Bolt	Qty.	Bolt Type	Thread Size	Bolt Length	Nut	Qty.	Nut Type	Washer	Qty.	Weight
3452	3106	1	SHCS	5/16-18	.500"	3282	1	Roll-In T-Nut with Flex Handle	—	—	.040 lb
75-3839	3106	1			.500"	3282	1	Roll-In T-Nut with Flex Handle	—	—	.040 lb
3450	3106	1			.500"	3278	1	Slide-In Economy T-Nut - Offset Thread	—	—	.034 lb
3634*	3610	1			.500"	3678	1	Slide-In Economy T-Nut - Offset Thread	—	—	.035 lb
75-3838	3106	1			.500"	3278	1	Slide-In Economy T-Nut - Offset Thread	—	—	.034 lb
3456	3110	1			.625"	3282	1	Roll-In T-Nut with Flex Handle	—	—	.053 lb
3464	3110	1			.625"	3282	1	Roll-In T-Nut with Flex Handle	3260	1	.057 lb
75-3841	3110	1			.625"	3282	1	Roll-In T-Nut with Flex Handle	—	—	.053 lb
75-3847	3110	1			.625"	3282	1	Roll-In T-Nut with Flex Handle	3260	1	.057 lb
3454	3110	1			.625"	3278	1	Slide-In Economy T-Nut - Offset Thread	—	—	.040 lb
3462	3110	1			.625"	3278	1	Slide-In Economy T-Nut - Offset Thread	3260	1	.045 lb
3636*	3612	1			.625"	3678	1	Slide-In Economy T-Nut - Offset Thread	—	—	.036 lb
3699*	3612	1			.625"	3678	1	Slide-In Economy T-Nut - Offset Thread	3659	1	.040 lb
75-3840	3110	1			.625"	3278	1	Slide-In Economy T-Nut - Offset Thread	—	—	.040 lb
75-3846	3110	1			.625"	3278	1	Slide-In Economy T-Nut - Offset Thread	3260	1	.045 lb
3468	3112	1			.750"	3282	1	Roll-In T-Nut with Flex Handle	3260	1	.049 lb
75-3843	3112	1			.750"	3282	1	Roll-In T-Nut with Flex Handle	—	—	.044 lb
75-3849	3112	1			.750"	3282	1	Roll-In T-Nut with Flex Handle	3260	1	.053 lb
3455	3112	1			.750"	3278	1	Slide-In Economy T-Nut - Offset Thread	—	—	.041 lb
3466	3112	1			.750"	3278	1	Slide-In Economy T-Nut - Offset Thread	3260	1	.047 lb
3640*	3615	1			.750"	3678	1	Slide-In Economy T-Nut - Offset Thread	3659	1	.051 lb
75-3842	3112	1			.750"	3278	1	Slide-In Economy T-Nut - Offset Thread	—	—	.041 lb
75-3848	3112	1			.750"	3278	1	Slide-In Economy T-Nut - Offset Thread	3260	1	.045 lb
3446	3119	1			.875"	3214	1	Hex Nut	3260	1	.040 lb
3460	3119	1			.875"	3282	1	Roll-In T-Nut with Flex Handle	—	—	.055 lb

*Assembly comprised of stainless steel (SS) hardware

CONTINUE

5/16-18 Socket Head Cap Screw (SHCS)

Assy. No.	Bolt	Qty.	Bolt Type	Thread Size	Bolt Length	Nut	Qty.	Nut Type	Washer	Qty.	Weight
3458	3119	1	SHCS	5/16-18	.875"	3278	1	Slide-In Economy T-Nut - Offset Thread	—	—	.045 lb
3638*	3619	1			.875"	3678	1	Slide-In Economy T-Nut - Offset Thread	—	—	.039 lb
3473	3122	1			1.000"	3214	1	Hex Nut	3260	1	.042 lb
3472	3122	1			1.000"	3282	1	Roll-In T-Nut with Flex Handle	3260	1	.060 lb
75-3845	3122	1			1.000"	3282	1	Roll-In T-Nut with Flex Handle	—	—	.056 lb
75-3851	3122	1			1.000"	3282	1	Roll-In T-Nut with Flex Handle	3260	1	.060 lb
3470	3122	1			1.000"	3278	1	Slide-In Economy T-Nut - Offset Thread	3260	1	.051 lb
3642*	3622	1			1.000"	3678	1	Slide-In Economy T-Nut - Offset Thread	3659	1	.044 lb
75-3844	3122	1			1.000"	3278	1	Slide-In Economy T-Nut - Offset Thread	—	—	.046 lb
75-3850	3122	1			1.000"	3278	1	Slide-In Economy T-Nut - Offset Thread	3260	1	.051 lb
3421	3123	1			1.300"	3278	1	Slide-In Economy T-Nut - Offset Thread	3260	1	.056 lb
3422	3127	1			1.500"	3278	1	Slide-In Economy T-Nut - Offset Thread	3260	1	.041 lb
3613	3127	1			1.500"	3278	1	Slide-In Economy T-Nut - Offset Thread	—	—	.056 lb
3423	3129	1			1.750"	3278	1	Slide-In Economy T-Nut - Offset Thread	3260	1	.065 lb
3972	3955	1			1.750"	3759	1	Flanged Hex Nut	3760	1	.060 lb
3424	3130	1			2.000"	3278	1	Slide-In Economy T-Nut - Offset Thread	3260	1	.070 lb
3962	3956	1			2.000"	3759	1	Flanged Hex Nut	3760	1	.064 lb
3427	3131	1			2.250"	3278	1	Slide-In Economy T-Nut - Offset Thread	—	—	.072 lb
3428	3132	1			2.500"	3278	1	Slide-In Economy T-Nut - Offset Thread	3260	1	.080 lb
3429	3132	1			2.500"	3278	1	Slide-In Economy T-Nut - Offset Thread	—	—	.076 lb
3430	3133	1			3.000"	3278	1	Slide-In Economy T-Nut - Offset Thread	—	—	.086 lb
3431	3140	1			3.250"	3278	1	Slide-In Economy T-Nut - Offset Thread	—	—	.093 lb

*Assembly comprised of stainless steel (SS) hardware

3/8-16 Socket Head Cap Screw (SHCS)

Assy. No.	Bolt	Qty.	Bolt Type	Thread Size	Bolt Length	Nut	Qty.	Nut Type	Washer	Qty.	Weight
3289	3124	1	SHCS	3/8-16	1.000"	—	—	—	3261	1	.051 lb

8-32 Button Head Socket Cap Screw (BHSCS)

Assy. No.	Bolt	Qty.	Bolt Type	Thread Size	Bolt Length	Nut	Qty.	Nut Type	Washer	Qty.	Weight
3483	3005	1	BHSCS	8-32	.375"	3275	1	Slide-In Economy T-Nut - Centered Thread	—	—	.016 lb
3489	3024	1		8-32	.500"	3007	1	8-32 Hex Nut	3006	1	.001 lb

10-32 Button Head Socket Cap Screw (BHSCS)

Assy. No.	Bolt	Qty.	Bolt Type	Thread Size	Bolt Length	Nut	Qty.	Nut Type	Washer	Qty.	Weight
3426	3042	1	BHSCS	10-32	.375"	3205	1	Standard Slide-In T-Nut	—	—	.011 lb
3487	3050	1			.500"	3201	1	Standard Slide-In T-Nut	—	—	.030 lb
3488	3051	1			.625"	3053	1	Hex Nut	3055	1	.008 lb

10-32 Socket Head Cap Screw (SHCS)

Assy. No.	Bolt	Qty.	Bolt Type	Thread Size	Bolt Length	Nut	Qty.	Nut Type	Washer	Qty.	Weight
3457	3044	1	SHCS	10-32	.375"	3276	1	Slide-In Economy T-Nut - Centered Thread	—	—	.013 lb
3459	3052	1			.625"	3053	1	Hex Nut	3055	1	.008 lb

CONTINUE

M6 x 1.0 Button Head Socket Cap Screw (BHSCS)

Assy. No.	Bolt	Qty.	Bolt Type	Thread Size	Bolt Length	Nut	Qty.	Nut Type	Washer	Qty.	Weight
75-3509	13-6310	2			10.00mm	25-1962	1	Double Slide-In Economy T-Nut	—	—	.033 lb
75-3435	13-6310	1			10.00mm	3876	1	Roll-In T-Nut with Flex Handle	—	—	.014 lb
75-3640	11-6310	1			10.00mm	25-1966	1	Roll-In T-Nut with Flex Handle	—	—	.018 lb
75-3641	11-6310	1			10.00mm	25-1966	1	Roll-In T-Nut with Flex Handle	—	—	.012 lb
75-3642	11-6310	1			10.00mm	25-1966	1	Roll-In T-Nut with Flex Handle	—	—	.014 lb
75-3404	13-6310	1			10.00mm	3859	1	Slide-In Economy T-Nut - Centered Thread	—	—	.030 lb
75-3515	11-6310	1			10.00mm	3859	1	Slide-In Economy T-Nut - Centered Thread	—	—	.032 lb
75-3599	11-6310	1			10.00mm	3931	1	Standard Drop-In T-Nut	—	—	.012 lb
75-3510	13-6312	2			12.00mm	25-1962	1	Double Slide-In Economy T-Nut	—	—	.034 lb
75-3511	13-6312	2			12.00mm	25-1962	1	Double Slide-In Economy T-Nut	13-6041	2	.038 lb
75-3466	13-6312	1			12.00mm	13-6065	1	Hex Nut	13-6041	1	.014 lb
75-3436	13-6312	1			12.00mm	3876	1	Roll-In T-Nut with Flex Handle	—	—	.015 lb
3824	3802	1			12.00mm	3876	1	Roll-In T-Nut with Flex Handle	3861	1	.017 lb
3867	3802	1			12.00mm	3876	1	Roll-In T-Nut with Flex Handle	—	—	.015 lb
75-3439	13-6312	1			12.00mm	3876	1	Roll-In T-Nut with Flex Handle	13-6041	1	.016 lb
75-3405	13-6312	1			12.00mm	3859	1	Slide-In Economy T-Nut - Centered Thread	—	—	.016 lb
75-3408	13-6312	1			12.00mm	3859	1	Slide-In Economy T-Nut - Centered Thread	13-6041	1	.019 lb
75-3516	11-6312	1			12.00mm	3859	1	Slide-In Economy T-Nut - Centered Thread	—	—	.017 lb
75-3518	11-6312	1			12.00mm	3859	1	Slide-In Economy T-Nut - Centered Thread	11-6041	1	.014 lb
75-3600	11-6312	1			12.00mm	3931	1	Standard Drop-In T-Nut	—	—	.014 lb
75-3603	11-6314	1			14.00mm	11-6065	1	Hex Nut	—	—	.013 lb
75-3643	11-6314	1			14.00mm	25-1966	1	Roll-In T-Nut with Flex Handle	—	—	.015 lb
75-3601	11-6314	1	BHSCS	M6 X 1.0	14.00mm	13119	1	Standard Drop-In T-Nut	—	—	.015 lb
75-3602	11-6314	1			14.00mm	13129	1	Standard Drop-In T-Nut	—	—	.023 lb
75-3622	11-6314	1			14.00mm	13119	1	Standard Drop-In T-Nut	—	—	.015 lb
75-3467	13-6316	1			16.00mm	13-6065	1	Hex Nut	13-6041	1	.014 lb
75-3437	13-6316	1			16.00mm	3876	1	Roll-In T-Nut with Flex Handle	—	—	.015 lb
3827	3804	1			16.00mm	3876	1	Roll-In T-Nut with Flex Handle	3861	1	.018 lb
75-3440	13-6316	1			16.00mm	3876	1	Roll-In T-Nut with Flex Handle	13-6041	1	.016 lb
75-3406	13-6316	1			16.00mm	3859	1	Slide-In Economy T-Nut - Centered Thread	—	—	.019 lb
3826	3804	1			16.00mm	3836	1	Slide-In Economy T-Nut - Centered Thread	3861	1	.028 lb
75-3409	13-6316	1			16.00mm	3859	1	Slide-In Economy T-Nut - Centered Thread	13-6041	1	.017 lb
75-3480	13-6316	1			16.00mm	40-1961	1	Slide-In Economy T-Nut - Centered Thread	13-6041	1	.028 lb
75-3517	11-6316	1			16.00mm	3859	1	Slide-In Economy T-Nut - Centered Thread	—	—	.020 lb
75-3519	11-6316	1			16.00mm	3859	1	Slide-In Economy T-Nut - Centered Thread	11-6041	1	.020 lb
75-3477	13-6316	1			16.00mm	—	—	—	13-6041	1	.010 lb
75-3605	11-6318	1			18.00mm	11-6065	1	Hex Nut	11-6041	1	.054 lb
75-3482	11-6318	1			18.00mm	13129	1	Standard Drop-In T-Nut	—	—	.024 lb
75-3468	13-6320	1			20.00mm	13-6065	1	Hex Nut	13-6041	1	.017 lb
3850	3808	1			20.00mm	3876	1	Roll-In T-Nut with Flex Handle	3861	1	.020 lb
75-3438	13-6320	1			20.00mm	3876	1	Roll-In T-Nut with Flex Handle	—	—	.018 lb
75-3441	13-6320	1			20.00mm	3876	1	Roll-In T-Nut with Flex Handle	13-6041	1	.020 lb
75-3407	13-6320	1			20.00mm	3859	1	Slide-In Economy T-Nut - Centered Thread	—	—	.019 lb
75-3410	13-6320	1			20.00mm	3859	1	Slide-In Economy T-Nut - Centered Thread	13-6041	1	.021 lb
3829	3809	1			25.00mm	3876	1	Roll-In T-Nut with Flex Handle	3861	1	.022 lb

CONTINUE

Bolt Assemblies (Continued)

M6 x 1.0 Flat Head Socket Cap Screw (FHSCS)

Assy. No.	Bolt	Qty.	Bolt Type	Thread Size	Bolt Length	Nut	Qty.	Nut Type	Washer	Qty.	Weight
75-3541	13-6710	2	FHSCS	M6 X 1.0	10.00mm	25-1961	2	Slide-In Economy T-Nut - Centered Thread	—	—	.016 lb
75-3505	13-6712	1			12.00mm	3876	1	Roll-In T-Nut with Flex Handle	—	—	.015 lb
75-3645	13-6712	1			12.00mm	25-1966	1	Roll-In T-Nut with Flex Handle	—	—	.014 lb
75-3507	13-6712	1			12.00mm	3859	1	Slide-In Economy T-Nut - Centered Thread	—	—	.016 lb
75-3639	17-6712*	1			12.00mm	3873	1	Standard Slide-In T-Nut	—	—	.014 lb
75-3616	11-6714	1			14.00mm	3873	1	Standard Slide-In T-Nut	—	—	.011 lb
75-3584	11-6714	1			14.00mm	3873	1	Standard Slide-In T-Nut	—	—	.011 lb
75-3585	11-6714	1			14.00mm	3931	1	Standard Drop-In T-Nut	—	—	.015 lb
75-3647	11-6716	1			16.00mm	25-1966	1	Roll-In T-Nut with Flex Handle	—	—	.011 lb
75-3655	11-6716	1			16.00mm	40-1966	1	Roll-In T-Nut with Flex Handle	—	—	.026 lb
75-3591	11-6716	1			16.00mm	13119	1	Standard Drop-In T-Nut	—	—	.016 lb
75-3587	11-6718	1			18.00mm	13129	1	Standard Drop-In T-Nut	—	—	.011 lb
75-3628	11-6718	1			18.00mm	13119	1	Standard Drop-In T-Nut	—	—	.012 lb
75-3589	11-6720	1			20.00mm	11-6065	1	Hex Nut	11-6041	1	.011 lb
75-3644	11-6720	1			20.00mm	25-1966	1	Roll-In T-Nut with Flex Handle	—	—	.017 lb
75-3654	11-6720	1			20.00mm	40-1966	1	Roll-In T-Nut with Flex Handle	—	—	.026 lb
75-3588	11-6720	1			20.00mm	13129	1	Standard Drop-In T-Nut	—	—	.011 lb

M6 x 1.0 Socket Head Cap Screw (SHCS)

Assy. No.	Bolt	Qty.	Bolt Type	Thread Size	Bolt Length	Nut	Qty.	Nut Type	Washer	Qty.	Weight
75-3442	13-6510	1	SHCS	M6 X 1.0	10.00mm	3876	1	Roll-In T-Nut with Flex Handle	—	—	.014 lb
75-3520	11-6510	1			10.00mm	3859	1	Slide-In Economy T-Nut - Centered Thread	—	—	.019 lb
75-3411	13-6510	1			10.00mm	3859	1	Slide-In Economy T-Nut - Centered Thread	—	—	.019 lb
75-3590	11-6510	1			10.00mm	3931	1	Standard Drop-In T-Nut	—	—	.017 lb
75-3469	13-6512	1			12.00mm	13-6065	1	Hex Nut	13-6041	1	.016 lb
3833	3801	1			12.00mm	3876	1	Roll-In T-Nut with Flex Handle	—	—	.022 lb
3849	3801	1			12.00mm	3876	1	Roll-In T-Nut with Flex Handle	3861	1	.020 lb
75-3443	13-6512	1			12.00mm	3876	1	Roll-In T-Nut with Flex Handle	—	—	.014 lb
75-3450	13-6512	1			12.00mm	3876	1	Roll-In T-Nut with Flex Handle	13-6041	1	.020 lb
75-3412	13-6512	1			12.00mm	3859	1	Slide-In Economy T-Nut - Centered Thread	—	—	.019 lb
75-3521	11-6512	1			12.00mm	3859	1	Slide-In Economy T-Nut - Centered Thread	—	—	.020 lb
3831	3801	1			12.00mm	3836	1	Slide-In Economy T-Nut - Centered Thread	—	—	.022 lb
75-3419	13-6512	1			12.00mm	3859	1	Slide-In Economy T-Nut - Centered Thread	13-6041	1	.022 lb
75-3598	11-6512	1			12.00mm	3931	1	Standard Drop-In T-Nut	—	—	.020 lb
75-3592	11-6514	1			14.00mm	3873	1	Standard Slide-In T-Nut	—	—	.012 lb
75-3593	11-6514	1			14.00mm	3931	1	Standard Drop-In T-Nut	—	—	.018 lb
75-3594	11-6514	1			14.00mm	13129	1	Standard Drop-In T-Nut	—	—	.012 lb
75-3470	13-6516	1			16.00mm	13-6065	1	Hex Nut	13-6041	1	.018 lb
3856	3803	1			16.00mm	3876	1	Roll-In T-Nut with Flex Handle	3861	1	.022 lb
75-3444	13-6516	1			16.00mm	3876	1	Roll-In T-Nut with Flex Handle	—	—	.015 lb
75-3451	13-6516	1			16.00mm	3876	1	Roll-In T-Nut with Flex Handle	13-6041	1	.022 lb
75-3413	13-6516	1			16.00mm	3859	1	Slide-In Economy T-Nut - Centered Thread	—	—	.017 lb
75-3522	11-6516	1			16.00mm	3859	1	Slide-In Economy T-Nut - Centered Thread	—	—	.021 lb
3835	3803	1			16.00mm	3836	1	Slide-In Economy T-Nut - Centered Thread	—	—	.029 lb
75-3420	13-6516	1			16.00mm	3859	1	Slide-In Economy T-Nut - Centered Thread	13-6041	1	.033 lb
75-3595	11-6516	1			16.00mm	3931	1	Standard Drop-In T-Nut	—	—	.019 lb
75-3596	11-6518	1			18.00mm	3931	1	Standard Drop-In T-Nut	—	—	.019 lb

CONTINUE

M6 x 1.0 Socket Head Cap Screw (SHCS)

Assy. No.	Bolt	Qty.	Bolt Type	Thread Size	Bolt Length	Nut	Qty.	Nut Type	Washer	Qty.	Weight
3847	3806	1	SHCS	M6 X 1.0	20.00mm	3876	1	Roll-In T-Nut with Flex Handle	—	—	.021 lb
3855	3806	1			20.00mm	3876	1	Roll-In T-Nut with Flex Handle	3861	1	.023 lb
75-3445	13-6520	1			20.00mm	3876	1	Roll-In T-Nut with Flex Handle	—	—	.021 lb
3035	13-6520	1			20.00mm	3859	1	Slide-In Economy T-Nut - Centered Thread	—	—	.022 lb
75-3414	13-6520	1			20.00mm	3859	1	Slide-In Economy T-Nut - Centered Thread	—	—	.022 lb
75-3523	11-6520	1			20.00mm	3859	1	Slide-In Economy T-Nut - Centered Thread	—	—	.029 lb
75-3597	11-6520	1			20.00mm	13129	1	Standard Drop-In T-Nut	—	—	.010 lb
3845	3807	1			25.00mm	3876	1	Roll-In T-Nut with Flex Handle	—	—	.023 lb
3862	3807	1			25.00mm	3876	1	Roll-In T-Nut with Flex Handle	3861	1	.025 lb
75-3446	13-6525	1			25.00mm	3876	1	Roll-In T-Nut with Flex Handle	—	—	.023 lb
75-3415	13-6525	1			25.00mm	3859	1	Slide-In Economy T-Nut - Centered Thread	—	—	.024 lb
3841	3807	1			25.00mm	3836	1	Slide-In Economy T-Nut - Centered Thread	—	—	.031 lb
75-3524	11-6525	1			25.00mm	3859	1	Slide-In Economy T-Nut - Centered Thread	—	—	.031 lb
75-3447	13-6530	1			30.00mm	3876	1	Roll-In T-Nut with Flex Handle	—	—	.025 lb
75-3416	13-6530	1			30.00mm	3859	1	Slide-In Economy T-Nut - Centered Thread	—	—	.030 lb
75-3448	13-6535	1			35.00mm	3876	1	Roll-In T-Nut with Flex Handle	—	—	.029 lb
75-3417	13-6535	1			35.00mm	3859	1	Slide-In Economy T-Nut - Centered Thread	—	—	.029 lb
75-3449	13-6540	1			40.00mm	3876	1	Roll-In T-Nut with Flex Handle	—	—	.030 lb
75-3418	13-6540	1			40.00mm	3859	1	Slide-In Economy T-Nut - Centered Thread	—	—	.036 lb

M8 x 1.25 Button Head Socket Cap Screw (BHSCS)

Assy. No.	Bolt	Qty.	Bolt Type	Thread Size	Bolt Length	Nut	Qty.	Nut Type	Washer	Qty.	Weight
75-3512	13-8312	2	BHSCS	M8 X 1.25	12.00mm	40-1982	1	Double Slide-In Economy T-Nut	—	—	.094 lb
75-3452	13-8312	1			12.00mm	3842	1	Roll-In T-Nut with Flex Handle	—	—	.036 lb
75-3649	11-8312	1			12.00mm	40-1986	1	Roll-In T-Nut with Flex Handle	—	—	.036 lb
75-3615	11-8312	1			12.00mm	13094	1	Self-Aligning Roll-In T-Nut	—	—	.022 lb
75-3421	13-8312	1			12.00mm	3838	1	Slide-In Economy T-Nut - Offset Thread	—	—	.036 lb
75-3525	11-8312	1			12.00mm	3838	1	Slide-In Economy T-Nut - Offset Thread	—	—	.036 lb
75-3513	13-8316	2			16.00mm	40-1982	1	Double Slide-In Economy T-Nut	—	—	.099 lb
75-3514	13-8316	2			16.00mm	40-1982	1	Double Slide-In Economy T-Nut	13-6042	2	.105 lb
75-3471	13-8316	1			16.00mm	13-8065	1	Hex Nut	13-6042	1	.030 lb
3832	3813	1			16.00mm	3842	1	Roll-In T-Nut with Flex Handle	3860	1	.042 lb
75-3453	13-8316	1			16.00mm	3842	1	Roll-In T-Nut with Flex Handle	—	—	.039 lb
75-3456	13-8316	1			16.00mm	3842	1	Roll-In T-Nut with Flex Handle	13-6042	1	.042 lb
75-3650	11-8316	1			16.00mm	40-1986	1	Roll-In T-Nut with Flex Handle	—	—	.039 lb
75-3422	13-8316	1			16.00mm	3838	1	Slide-In Economy T-Nut - Offset Thread	—	—	.038 lb
75-3425	13-8316	1			16.00mm	3838	1	Slide-In Economy T-Nut - Offset Thread	13-6042	1	.041 lb
75-3526	11-8316	1			16.00mm	3838	1	Slide-In Economy T-Nut - Offset Thread	—	—	.038 lb
75-3528	11-8316	1			16.00mm	3838	1	Slide-In Economy T-Nut - Offset Thread	11-6042	1	.042 lb
3830	3813	1			16.00mm	3838	1	Slide-In Economy T-Nut - Offset Thread	3860	1	.041 lb
75-3651	11-8318	1			18.00mm	40-1986	1	Roll-In T-Nut with Flex Handle	—	—	.040 lb
75-3619	11-8318	1			18.00mm	13132	1	Standard Drop-In T-Nut	—	—	.024 lb
75-3472	13-8320	1			20.00mm	13-8065	1	Hex Nut	13-6042	1	.032 lb
3863	3815	2			20.00mm	3879	1	Double Slide-In Economy T-Nut	3860	2	.093 lb
3872	3815	1			20.00mm	3842	1	Roll-In T-Nut with Flex Handle	3860	1	.044 lb
75-3454	13-8320	1			20.00mm	3842	1	Roll-In T-Nut with Flex Handle	—	—	.041 lb

CONTINUE

Bolt Assemblies (Continued)

M8 x 1.25 Button Head Socket Cap Screw (BHSCS)

Assy. No.	Bolt	Qty.	Bolt Type	Thread Size	Bolt Length	Nut	Qty.	Nut Type	Washer	Qty.	Weight
75-3457	13-8320	1	BHSCS	M8 X 1.25	20.00mm	3842	1	Roll-In T-Nut with Flex Handle	13-6042	1	.045 lb
75-3648	11-8320	1			20.00mm	40-1986	1	Roll-In T-Nut with Flex Handle	—	—	.032 lb
3870	3815	1			20.00mm	3838	1	Slide-In Economy T-Nut - Offset Thread	3860	1	.044 lb
75-3423	13-8320	1			20.00mm	3838	1	Slide-In Economy T-Nut - Offset Thread	—	—	.041 lb
75-3426	13-8320	1			20.00mm	3838	1	Slide-In Economy T-Nut - Offset Thread	13-6042	1	.044 lb
75-3527	11-8320	1			20.00mm	3838	1	Slide-In Economy T-Nut - Offset Thread	—	—	.031 lb
75-3529	11-8320	1			20.00mm	3838	1	Slide-In Economy T-Nut - Offset Thread	11-6042	1	.035 lb
75-3478	13-8320	1			20.00mm	—	—	—	13-6042	1	.023 lb
3886	3819	1			25.00mm	3842	1	Roll-In T-Nut with Flex Handle	3860	1	.049 lb
75-3455	13-8325	1			25.00mm	3842	1	Roll-In T-Nut with Flex Handle	—	—	.044 lb
75-3458	13-8325	1			25.00mm	3842	1	Roll-In T-Nut with Flex Handle	13-6042	1	.048 lb
3877	3819	1			25.00mm	3838	1	Slide-In Economy T-Nut - Offset Thread	3860	1	.043 lb
75-3427	13-8325	1			25.00mm	3838	1	Slide-In Economy T-Nut - Offset Thread	13-6042	1	.047 lb
75-3473	13-8325	1			25.00mm	13-8065	1	Hex Nut	13-6042	1	.035 lb
3974	13-3945	1			45.00mm	13-3759	1	Flanged Hex Nut	3860	1	.058 lb
3964	13-3946	1			50.00mm	13-3759	1	Flanged Hex Nut	3860	1	.061 lb

M8 x 1.25 Flanged Hex Head Bolt

Assy. No.	Bolt	Qty.	Bolt Type	Thread Size	Bolt Length	Nut	Qty.	Nut Type	Washer	Qty.	Weight
3963	13-3753	1	Flanged Hex Head Bolt	M8 x 1.25	50.00mm	13-3759	1	Flanged Hex Nut	—	—	.077 lb

M8 x 1.25 Flat Head Socket Cap Screw (FHSCS)

Assy. No.	Bolt	Qty.	Bolt Type	Thread Size	Bolt Length	Nut	Qty.	Nut Type	Washer	Qty.	Weight
75-3506	13-8716	1	FHSCS	M8 X 1.25	16.00mm	3842	1	Roll-In T-Nut with Flex Handle	—	—	.029 lb
75-3653	11-8716	1			16.00mm	40-1986	1	Roll-In T-Nut with Flex Handle	—	—	.036 lb
75-3629	11-8716	1			16.00mm	13025	1	Self-Aligning Slide-In T-Nut	—	—	.031 lb
75-3508	13-8716	1			16.00mm	3838	1	Slide-In Economy T-Nut - Offset Thread	—	—	.028 lb
75-3618	11-8716	1			16.00mm	40-1981	1	Slide-In Economy T-Nut - Offset Thread	—	—	.036 lb
75-3617	11-8720	1			20.00mm	11-8065	1	Hex Nut	—	—	.028 lb
75-3652	11-8720	1			20.00mm	40-1986	1	Roll-In T-Nut with Flex Handle	—	—	.024 lb

M8 x 1.25 Slide-In Flanged Economy T-Slot Stud

Assy. No.	Bolt	Qty.	Bolt Type	Thread Size	Bolt Length	Nut	Qty.	Nut Type	Washer	Qty.	Weight
3825	3851	1	Slide-In Flanged Economy T-Slot Stud	M8 X 1.25	20.00mm	3821	1	Hex Nut	3860	1	.042 lb
3880	3851	1			20.00mm	3821	1	Hex Nut	3860	1	.040 lb
3889	3851	1			20.00mm	3821	1	Hex Nut	3860	1	.040 lb
75-3500	3851	1			20.00mm	3821	1	Hex Nut	3860	1	.040 lb
3881	3852	1			25.00mm	3821	1	Hex Nut	3860	1	.043 lb
75-3501	3852	1			25.00mm	3821	1	Hex Nut	3860	1	.043 lb
3882	3853	1			30.00mm	3821	1	Hex Nut	3860	1	.046 lb
3890	3853	1			30.00mm	3821	1	Hex Nut	3860	1	.046 lb
75-3502	3853	1			30.00mm	3821	1	Hex Nut	3860	1	.046 lb
3883	3854	1			35.00mm	3821	1	Hex Nut	3860	1	.051 lb
75-3503	3854	1			35.00mm	3821	1	Hex Nut	3860	1	.051 lb
3884	3857	1			45.00mm	3821	1	Hex Nut	3860	1	.058 lb
75-3504	3857	1			45.00mm	3821	1	Hex Nut	3860	1	.058 lb

CONTINUE

M8 x 1.25 Socket Head Cap Screw (SHCS)

Assy. No.	Bolt	Qty.	Bolt Type	Thread Size	Bolt Length	Nut	Qty.	Nut Type	Washer	Qty.	Weight
3840	3810	1	SHCS	M8 X 1.25	12.00mm	3842	1	Roll-In T-Nut with Flex Handle	—	—	.043 lb
75-3459	13-8512	1			12.00mm	3842	1	Roll-In T-Nut with Flex Handle	—	—	.044 lb
75-3624	11-8512	1			12.00mm	13025	1	Self-Aligning Slide-In T-Nut	—	—	.037 lb
3834	3810	1			12.00mm	3838	1	Slide-In Economy T-Nut - Offset Thread	—	—	.041 lb
75-3428	13-8512	1			12.00mm	3838	1	Slide-In Economy T-Nut - Offset Thread	—	—	.041 lb
75-3530	11-8512	1			12.00mm	3838	1	Slide-In Economy T-Nut - Offset Thread	—	—	.023 lb
75-3620	11-8512	1			12.00mm	30-3796	1	Slide-In Economy T-Nut - Centered Thread	—	—	.021 lb
3865	3812	1			16.00mm	3842	1	Roll-In T-Nut with Flex Handle	—	—	.036 lb
3878	3812	1			16.00mm	3842	1	Roll-In T-Nut with Flex Handle	3860	1	.039 lb
75-3460	13-8516	1			16.00mm	3842	1	Roll-In T-Nut with Flex Handle	—	—	.046 lb
75-3463	13-8516	1			16.00mm	3842	1	Roll-In T-Nut with Flex Handle	13-6042	1	.049 lb
75-3625	11-8516	1			16.00mm	13025	1	Self-Aligning Slide-In T-Nut	—	—	.040 lb
75-3621	11-8516	1			16.00mm	3838	1	Slide-In Economy T-Nut - Offset Thread	—	—	.044 lb
3864	3812	1			16.00mm	3838	1	Slide-In Economy T-Nut - Offset Thread	—	—	.058 lb
3874	3812	1			16.00mm	3838	1	Slide-In Economy T-Nut - Offset Thread	3860	1	.038 lb
75-3429	13-8516	1			16.00mm	3838	1	Slide-In Economy T-Nut - Offset Thread	—	—	.032 lb
75-3432	13-8516	1			16.00mm	3838	1	Slide-In Economy T-Nut - Offset Thread	13-6042	1	.032 lb
75-3531	11-8516	1			16.00mm	3838	1	Slide-In Economy T-Nut - Offset Thread	—	—	.044 lb
75-3534	11-8516	1			16.00mm	3838	1	Slide-In Economy T-Nut - Offset Thread	11-6042	1	.049 lb
75-3623	11-8516	1			16.00mm	13132	1	Standard Drop-In T-Nut	—	—	.037 lb
75-3627	11-8518	1			18.00mm	13025	1	Self-Aligning Slide-In T-Nut	—	—	.041 lb
75-3634	11-8518	1			18.00mm	3838	1	Slide-In Economy T-Nut - Offset Thread	—	—	.045 lb
75-3626	11-8518	1			18.00mm	13132	1	Standard Drop-In T-Nut	—	—	.038 lb
75-3475	13-8520	1			20.00mm	13-8065	1	Hex Nut	13-6042	1	.041 lb
3817	3814	1			20.00mm	3842	1	Roll-In T-Nut with Flex Handle	3860	1	.053 lb
3869	3814	1			20.00mm	3842	1	Roll-In T-Nut with Flex Handle	—	—	.049 lb
75-3461	13-8520	1			20.00mm	3842	1	Roll-In T-Nut with Flex Handle	—	—	.047 lb
75-3464	13-8520	1			20.00mm	3842	1	Roll-In T-Nut with Flex Handle	13-6042	1	.050 lb
3816	3814	1			20.00mm	3838	1	Slide-In Economy T-Nut - Offset Thread	3860	1	.051 lb
3899	3814	1			20.00mm	3838	1	Slide-In Economy T-Nut - Offset Thread	—	—	.048 lb
75-3433	13-8520	1			20.00mm	3838	1	Slide-In Economy T-Nut - Offset Thread	13-6042	1	.049 lb
75-3535	11-8520	1			20.00mm	3838	1	Slide-In Economy T-Nut - Offset Thread	11-6042	1	.051 lb
75-3430	13-8520	1			20.00mm	3838	1	Slide-In Economy T-Nut - Offset Thread	—	—	.046 lb
75-3630	11-8520	1			20.00mm	13132	1	Standard Drop-In T-Nut	—	—	.039 lb
75-3476	13-8525	1			25.00mm	13-8065	1	Hex Nut	13-6042	1	.044 lb
3888	3818	1			25.00mm	3842	1	Roll-In T-Nut with Flex Handle	3860	1	.056 lb
75-3462	13-8525	1			25.00mm	3842	1	Roll-In T-Nut with Flex Handle	—	—	.053 lb
75-3465	13-8525	1			25.00mm	3842	1	Roll-In T-Nut with Flex Handle	13-6042	1	.057 lb
3887	3818	1			25.00mm	3838	1	Slide-In Economy T-Nut - Offset Thread	3860	1	.054 lb
75-3431	13-8525	1			25.00mm	3838	1	Slide-In Economy T-Nut - Offset Thread	—	—	.050 lb
75-3434	13-8525	1			25.00mm	3838	1	Slide-In Economy T-Nut - Offset Thread	13-6042	1	.055 lb
75-3533	11-8525	1			25.00mm	3838	1	Slide-In Economy T-Nut - Offset Thread	—	—	.051 lb
75-3536	11-8525	1			25.00mm	3838	1	Slide-In Economy T-Nut - Offset Thread	11-6042	1	.054 lb
75-3479	13-8540	1			40.00mm	3838	1	Slide-In Economy T-Nut - Offset Thread	—	—	.040 lb
3975	13-3955	1			45.00mm	13-3759	1	Flanged Hex Nut	3860	1	.065 lb
3965	13-3956	1			50.00mm	13-3759	1	Flanged Hex Nut	3860	1	.070 lb

CONTINUE

M4 x 0.7 Button Head Socket Cap Screw (BHSCS)

Assy. No.	Bolt	Qty.	Bolt Type	Thread Size	Bolt Length	Nut	Qty.	Nut Type	Washer	Qty.	Weight
75-3537	11-4310	1	BHSCS	M4 x 0.7	10.00mm	25-1941	1	Slide-In Economy T-Nut - Offset Thread	—	—	.008 lb
75-3538	11-4312	1			12.00mm	11-4065	1	Hex Nut	11-6039	1	.005 lb

M4 x 0.7 Flat Head Socket Cap Screw (FHSCS)

Assy. No.	Bolt	Qty.	Bolt Type	Thread Size	Bolt Length	Nut	Qty.	Nut Type	Washer	Qty.	Weight
75-3552	11-4710	1	FHSCS	M4 x 0.7	10.00mm	14159	1	Slide-In Economy T-Nut Block	—	—	.005 lb
75-3562	11-4712	1			12.00mm	11-4065	1	Hex Nut	11-6039	1	.004 lb

M4 x 0.7 Socket Head Cap Screw (SHCS)

Assy. No.	Bolt	Qty.	Bolt Type	Thread Size	Bolt Length	Nut	Qty.	Nut Type	Washer	Qty.	Weight
75-3556	11-4510	1	SHCS	M4 x 0.7	10.00mm	14164	1	Standard Drop-In T-Nut	—	—	.0031 kg
75-3563	11-4512	1			12.00mm	13123	1	Standard Drop-In T-Nut	—	—	.0099 kg
75-3558	11-4516	1			16.00mm	11-4065	1	Hex Nut	11-6039	1	.021 lb

M5 x 0.8 Button Head Socket Cap Screw (BHSCS)

Assy. No.	Bolt	Qty.	Bolt Type	Thread Size	Bolt Length	Nut	Qty.	Nut Type	Washer	Qty.	Weight
75-3581	11-5308	1	BHSCS	M5 X 0.8	8.00mm	14122	1	Slide-In Economy T-Nut Block	—	—	.010 lb
75-3656	13-5310	1			10.00mm	14122	1	Slide-In Economy T-Nut Block	—	—	.008 lb
75-3539	11-5312	1			12.00mm	3871	1	Standard Slide-In T-Nut	—	—	.013 lb
75-3583	11-5312	1			12.00mm	3930	1	Standard Drop-In T-Nut	—	—	.009 lb
75-3576	11-5314	1			14.00mm	11-5065	1	Hex Nut	11-6040	1	.009 lb
75-3540	11-5316	1			16.00mm	11-5065	1	Hex Nut	11-6040	1	.009 lb

M5 x 0.8 Flat Head Socket Cap Screw (FHSCS)

Assy. No.	Bolt	Qty.	Bolt Type	Thread Size	Bolt Length	Nut	Qty.	Nut Type	Washer	Qty.	Weight
75-3571	11-5708	1	FHSCS	M5 X 0.8	8.00mm	14122	1	Slide-In Economy T-Nut Block	—	—	.010 lb
75-3572	11-5710	1			10.00mm	14122	1	Slide-In Economy T-Nut Block	—	—	.007 lb
75-3573	11-5714	1			14.00mm	11-5065	1	Hex Nut	11-6040	1	.008 lb
75-3574	11-5714	1			14.00mm	3930	1	Standard Drop-In T-Nut	—	—	.012 lb
75-3575	11-5716	1			16.00mm	3930	1	Standard Drop-In T-Nut	—	—	.012 lb

M5 x 0.8 Socket Head Cap Screw (SHCS)

Assy. No.	Bolt	Qty.	Bolt Type	Thread Size	Bolt Length	Nut	Qty.	Nut Type	Washer	Qty.	Weight
75-3401	13-5510	1	SHCS	M5 X 0.8	10.00mm	25-1951	1	Slide-In Economy T-Nut - Offset Thread	—	—	.012 lb
75-3578	11-5512	1			12.00mm	14122	1	Slide-In Economy T-Nut Block	—	—	.009 lb
75-3400	13-5516	1			16.00mm	13-5065	1	Hex Nut	13-6040	1	.011 lb
75-3483	11-5516	1			16.00mm	13116	1	Standard Drop-In T-Nut	11-6040	1	.009 lb
75-3481	11-5520	1			20.00mm	13127	1	Standard Drop-In T-Nut	11-6040	1	.012 lb

Part Description:

The standard tube insert is used to make strong connections between Ready Tube profiles. It connects profiles together when their lengths are divisible by 1.50". The standard tube insert requires no additional machining services when used in Ready Tube profiles with predrilled holes. See below for information on hardware for the standard tube insert. **Additional Information:** For a custom length insert, see the tube insert profile on page 856.

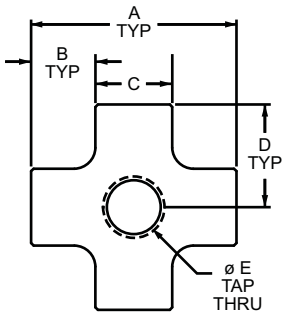

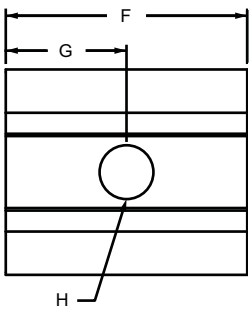

Part No.	Series	Material	Finish	A	B	C	D	E (Thread)	F	G	H	Weight
4600	RT	Aluminum	Mill	1.225"	.382"	.459"	.613"	5/16-18	1.380"	.690"	.332"	.108 lb
4615	RT			1.225"	.382"	.459"	.613"	5/16-18	1.440"	.720"	5/16-18	.112 lb
4601	RT			1.225"	.382"	.459"	.613"	M8 x 1.25	1.440"	.720"	.332"	.112 lb
4616	RT			1.225"	.382"	.459"	.613"	M8 x 1.25	1.440"	.720"	M8 x 1.25	.112 lb

Suggested Hardware

Insert	Part No.	Series	Qty.	Description
4600	3970	RT	1	5/16-18 x 1.75" Flanged Hex Head Bolt Assembly
	3753	RT	1	5/16-18 x 2.00" Flanged Hex Head Bolt
4615	3750	RT	1	5/16-18 x 1.25" Flanged Hex Head Bolt
	3753	RT	1	5/16-18 x 2.00" Flanged Hex Head Bolt
4601	3963	RT	1	M8 x 50.00mm Flanged Hex Head Bolt Assembly
	13-3753	RT	1	M8 x 50.00mm Flanged Hex Head Bolt
4616	13-3943	RT	1	M8 x 30.00mm BHSCS
	13-3945	RT	1	M8 x 45.00mm BHSCS

Standard Tube Insert Kit with Hex Nut

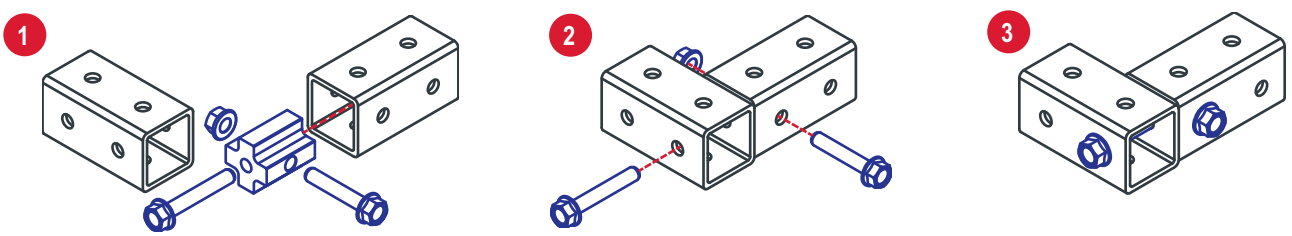

Extended Tube Insert

Part Description:

The extended tube insert connects Ready Tube profiles together when their lengths are not divisible by 1.50". It is also commonly used to add casters and leveling feet and requires no additional machining services when used in Ready Tube profiles with predrilled holes. See below for information on hardware for the standard tube insert. **Additional Information:** For a custom length insert, see the tube insert profile on page 856.

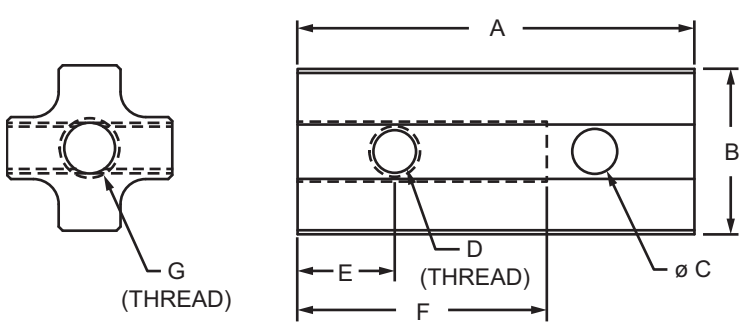

Part No.	Series	Material	Finish	A	B	C	D (Thread)	E	F	G (Thread)	Weight
4605	RT	Aluminum	Mill	2.940"	1.225"	.332"	5/16-18	.720"	2.000"	5/16-18	.233 lb
4606	RT		Mill	2.940"	1.225"	.332"	M8 x 1.25	.720"	2.000"	M8 x 1.25	.231 lb
4607	RT		Mill	2.940"	1.225"	.332"	5/16-18	.720"	2.000"	3/8-16	.227 lb
4608	RT		Mill	2.940"	1.225"	.332"	M8 x 1.25	.720"	2.000"	M10 x 1.5	.224 lb
4609	RT		Mill	2.940"	1.225"	.332"	5/16-18	.720"	2.000"	7/16-14	.221 lb
4610	RT		Mill	2.940"	1.225"	.332"	M8 x 1.25	.720"	2.000"	M12 x 1.75	.213 lb
4611	RT		Mill	2.940"	1.225"	.332"	5/16-18	.720"	2.000"	1/2-13	.210 lb

Suggested Hardware

Insert	Part No.	Series	Qty.	Description	OR	Part No.	Description
4605, 4607, 4609, 4611	3970	RT	1	5/16-18 x 1.75" Flanged Hex Head Bolt Assembly	OR	9760	Roll Pin
	3753	RT	1	5/16-18 x 2.00" Flanged Hex Head Bolt			
4606, 4608, 4610	13-3945	RT	1	M8 x 45.00mm BHSCS			
	3963	RT	1	M8 Flanged Hex Nut			
				M8 x 50.00mm Flanged Hex Head Bolt			

Part Description:

The standard tube insert kit with hex nut is used to make strong connections between Ready Tube profiles. It is comprised of a standard tube insert, two flanged hex head bolts and a flanged hex nut and is used to connect profiles together when their lengths are divisible by 1.50”. The standard tube insert kit with hex nut requires no additional hardware or machining services. Ready Tube is also available without pre-drilled holes; fastening these profiles will require machining services.

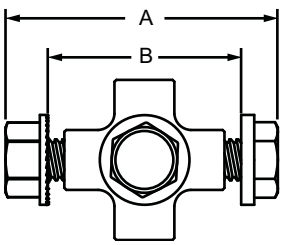

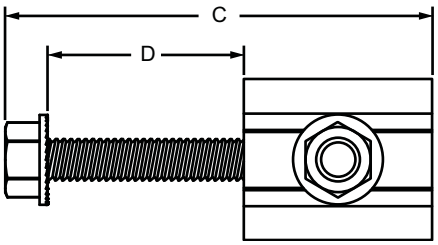

Part No.	Series	Material	Finish	Thread	A	B	C	D	Weight
4701	RT	Aluminum	Mill	5/16-18	2.062”	1.500”	3.226”	1.500”	.219 lb

Included Hardware

Insert	Part No.	Series	Qty.	Description
4701	4600	RT	1	5/16-18 Standard Tube Insert
	3970	RT	1	5/16-18 x 1.75” Flanged Hex Head Bolt Assembly
	3753	RT	1	5/16-18 x 2.00” Flanged Hex Head Bolt

Standard Tube Insert Kit with Hex Nut

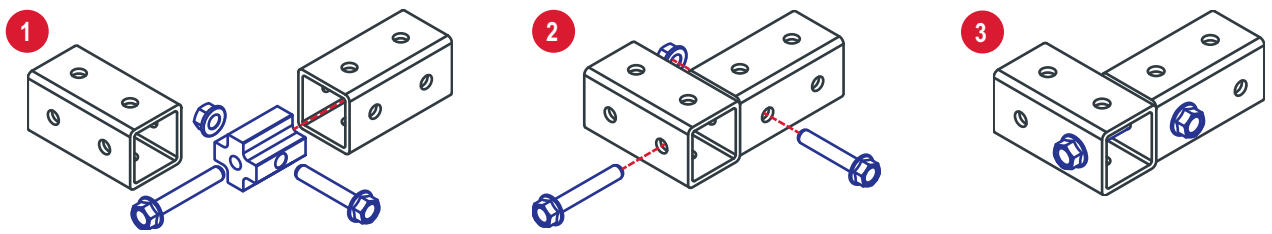

Standard Tube Insert Kit with Roll Pin

Part Description:

The standard tube insert kit with roll pin is used to make strong connections between Ready Tube profiles. It is comprised of a standard tube insert, one flanged hex head bolts and a roll pin and is used to connect profiles together when their lengths are divisible by 1.50". The roll pin provides a smooth, clean finish and eliminates the use of protruding hardware. The standard tube insert kit with roll pin requires no additional hardware or machining services. Ready Tube also is available without pre-drilled holes; fastening these profiles will require machining services. Use a roll pin punch to install this product (page 915).

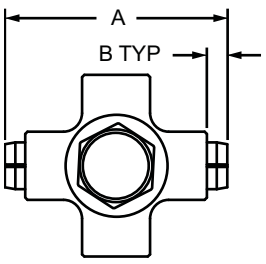

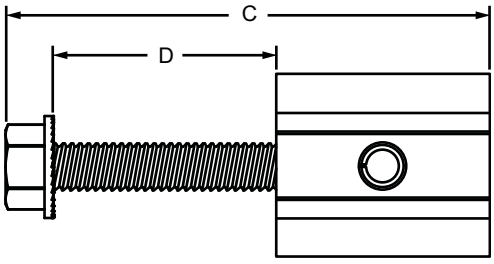

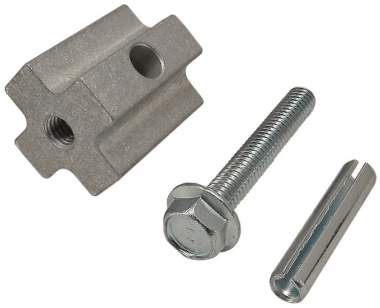

Part No.	Series	Material	Finish	Thread	A	B	C	D	Weight
4700	RT	Aluminum	Mill	5/16-18	1.500"	.138"	3.226"	1.500"	.186 lb
4702	RT		Mill	M8 x 1.25"	1.500"	.138"	3.226"	1.500"	.186 lb

Included Hardware

Insert	Part No.	Series	Qty.	Description
4700	4600	RT	1	5/16-18 Standard Tube Insert
	9760	RT	1	Roll Pin
	3753	RT	1	5/16-18 x 2.00" Flanged Hex Head Bolt
4702	4601	RT	1	M8 x 1.25" Standard Tube Insert
	9760	RT	1	Roll Pin
	13-3753	RT	1	M8 x 50.00mm Flanged Hex Head Bolt

Standard Tube Insert Kit with Roll Pin

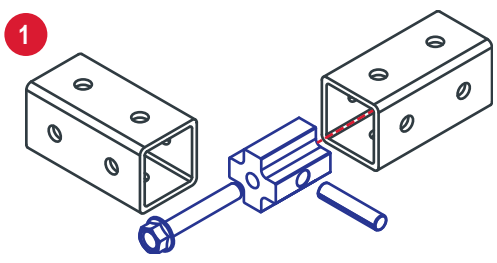

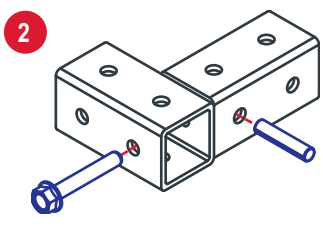

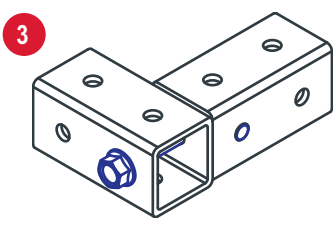

Part Description:

The roll pin is commonly used with the standard or extended insert to make strong connections between Ready Tube profiles. The roll pin provides a smooth, clean finish and eliminates the need for protruding hardware when used with the standard insert. Use a roll pin punch to install this product (page 915). For information on the standard tube insert kit with roll pin see page 422.

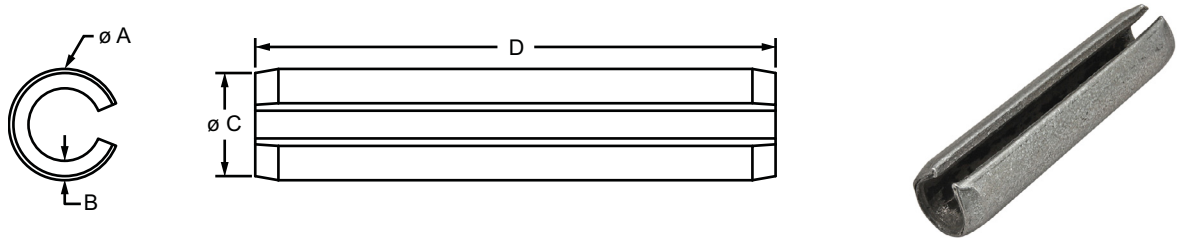

Part No.	Series	Material	Finish	A	B	C	D	Weight
9760	RT	Steel	Bright Zinc	.341"	.059"	.315"	1.500"	.019 lb

Standard Tube Insert Kit with Roll Pin

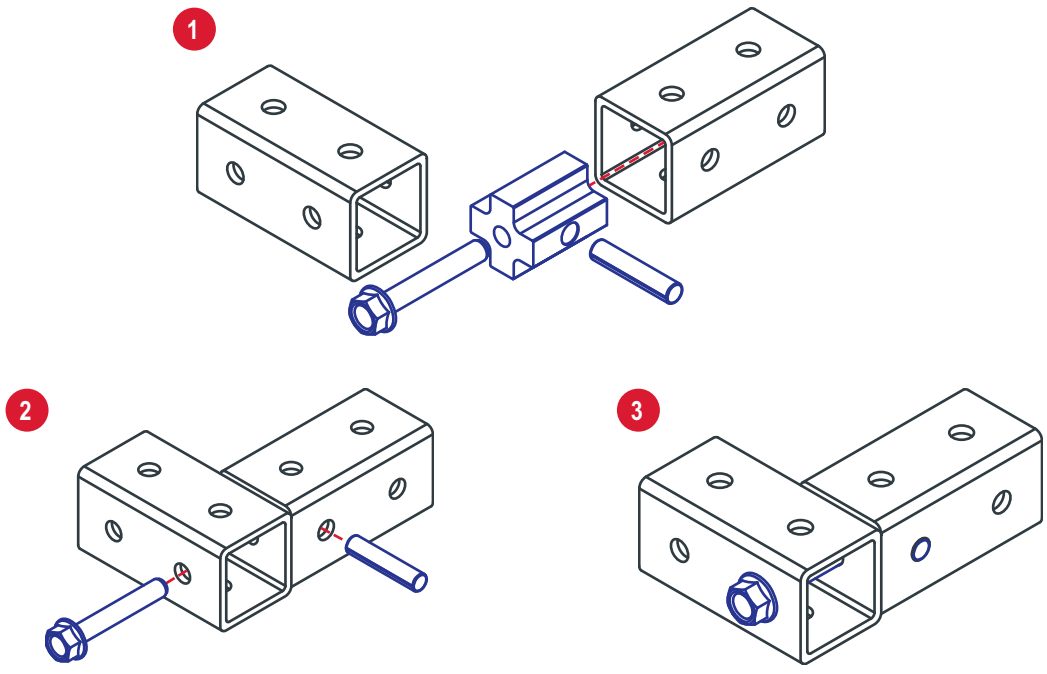

Anti-Rotation Plate

Part Description:

The anti-rotation plate is used with flanged Ready Tube profiles to prevent offset loads from twisting. It is aluminum, making it a strong and durable option. See below for the suggested hardware to mount the plate to a Ready Tube profile.

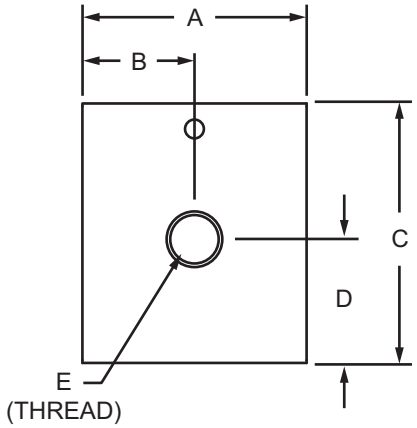

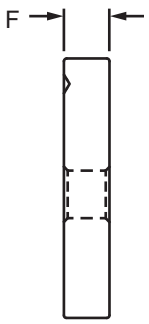

Part No.	Series	Material	Finish	A	B	C	D	E (Thread)	F	Weight
4625	RT	Aluminum	Clear Anodize	1.230"	.615"	1.490"	.745"	5/16-18	.250"	.044 lb
4625-Black	RT		Black Anodize	1.230"	.615"	1.490"	.745"	5/16-18	.250"	.044 lb
4626	RT		Clear Anodize	31.21mm	15.62mm	37.85mm	18.92mm	M8 x 1.25	6.35mm	.042 lb
4626-Black	RT		Black Anodize	31.21mm	15.62mm	37.85mm	18.92mm	M8 x 1.25	6.35mm	.042 lb

Suggested Hardware (Mount to RT Profile)

Part No.	Series	Qty.	Bolt
3752	F	1	5/16-18 x 1.75" Flanged Hex Bolt
13-3945	M	1	M8 x 1.25 BHSCS

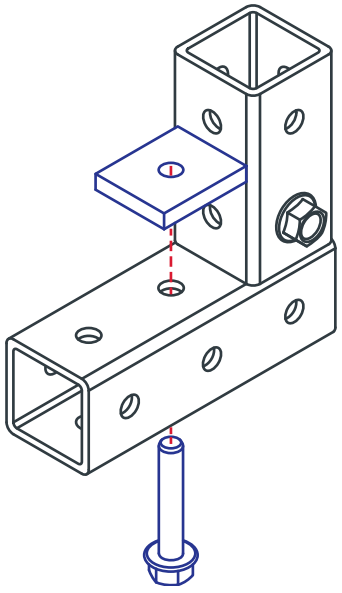

Part Description:

The 2 way - butt connector is made of nylon and is used with a Quick Frame profile which has built-in ridges that bite into the fastener to create tension without the use of additional hardware. It connects profiles and provides a clean, flush connection quickly and easily using only a soft-faced mallet (page 914) to form light-duty yet sturdy builds. The 2 way - butt connector can also be used to connect shorter bars together where logistics or space makes it difficult to maneuver longer profiles. It requires no additional hardware and no machining services.

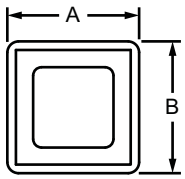

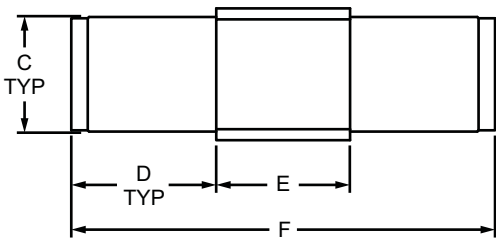

Part No.	Series	Material	Process	Color	A	B	C	D	E	F	Weight
9115	QF	Nylon	Injection Molded	Gray	1.100"	1.100"	.870"	1.100"	1.000"	3.200"	.061 lb
9215	QF			Black	1.100"	1.100"	.870"	1.100"	1.000"	3.200"	.059 lb

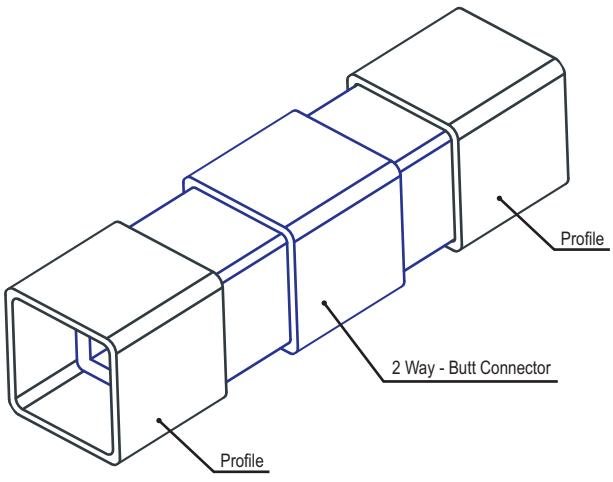

2 Way - Corner Connector

Part Description:

The 2 way - corner connector is made of nylon and is used with a Quick Frame profile which has built-in ridges that bite into the fastener to create tension without the use of additional hardware. It provides a 90 degree flush connection quickly and easily using only a soft-faced mallet (page 914) to form light-duty yet sturdy builds. The 2 way - corner connector is commonly used when transitioning between standard and flanged profiles. It requires no additional hardware and no machining services. Connecting flanged Quick Frame profiles at a 90 degree angle requires a 45 degree miter cut (see machining service on page 883) to connect without interference.

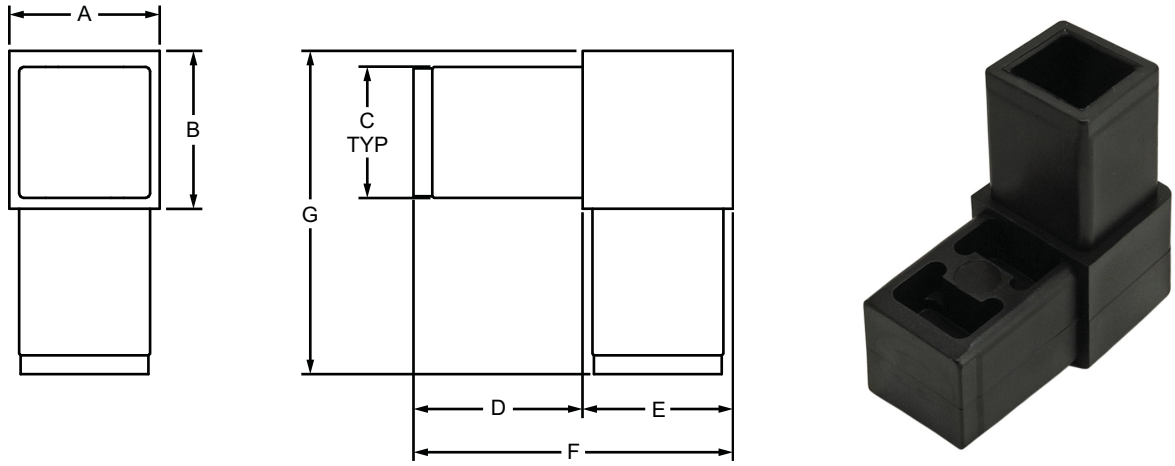

Part No.	Series	Material	Process	Color	A	B	C	D	E	F	G	Weight
9120	QF	Nylon	Injection Molded	Gray	1.000"	1.000"	.870"	1.125"	1.000"	2.125"	2.125"	.065 lb
9220	QF			Black	1.000"	1.000"	.870"	1.125"	1.000"	2.125"	2.125"	.061 lb

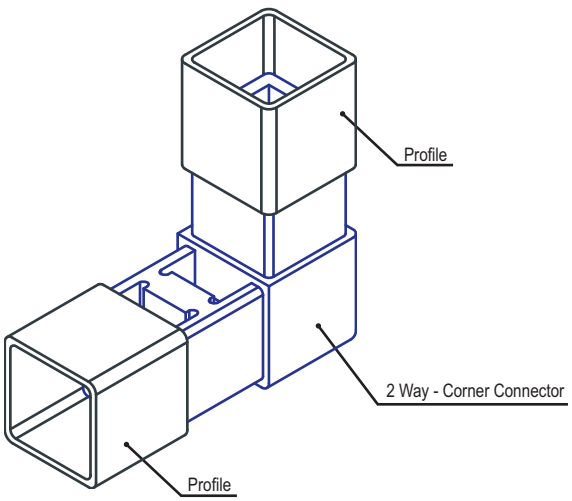

Part Description:

The 90 degree straight base connector is made of nylon and is used with a Quick Frame profile which has built-in ridges that bite into the fastener to create tension without the use of hardware. It is convenient for projects that will be attached or mounted at a 90 degree angle to any flat surface or T-slot profile and provides a clean, flush connection. The 90 degree straight base connector connects profiles quickly and easily using only a soft-faced mallet (page 914) to form light-duty yet sturdy builds.

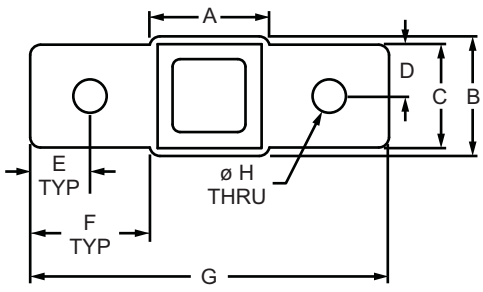

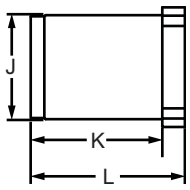

Part No.	Series	Material	Process	Color	A	B	C	D	E	F	G	H	J	K	L	Weight
9140	QF	Nylon	Injection Molded	Gray	1.000"	1.000"	.860"	.430"	.500"	1.000"	3.000"	.281"	.870"	.840"	1.030"	.028 lb
9240	QF			Black	1.000"	1.000"	.860"	.430"	.500"	1.000"	3.000"	.281"	.870"	.840"	1.030"	.028 lb

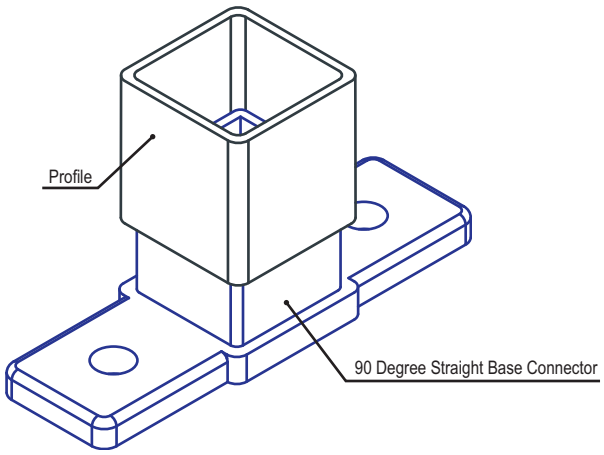

90 Degree Corner Base Connector

Part Description:

The 90 degree corner base connector is made of nylon and is used with a Quick Frame profile which has built-in ridges that bite into the fastener to create tension without the use of hardware. It is convenient for projects that will be attached or mounted at a 90 degree angle to any flat surface or T-slot profile and it also provides a corner connection. The 90 degree corner base connector attaches profiles quickly and easily using only a soft-faced mallet (page 914) to form light-duty yet sturdy builds.

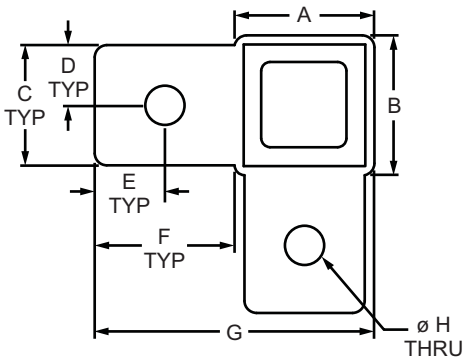

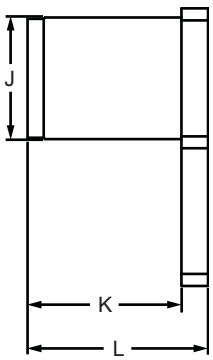

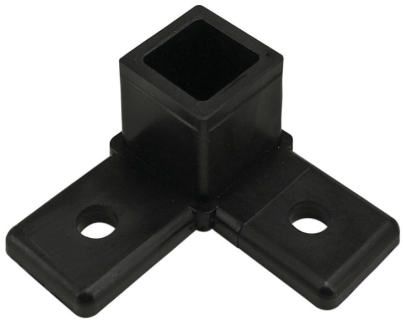

Part No.	Series	Material	Process	Color	A	B	C	D	E	F	G	H	J	K	L	Weight
9242	QF	Nylon	Injection Molded	Black	1.000"	1.000"	.860"	.430"	.500"	1.000"	2.000"	.281"	.870"	1.100"	1.290"	.028 lb

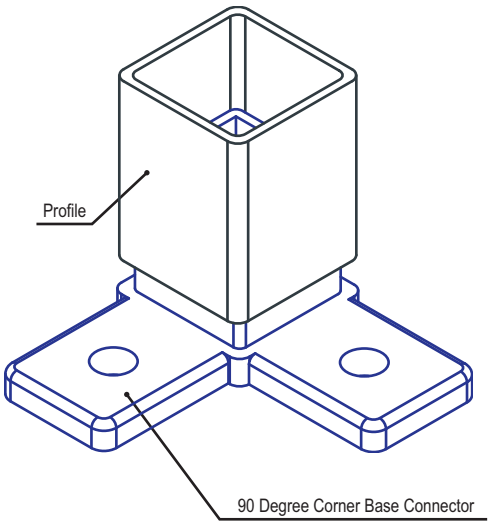

FASTENERS

Part Description:

The 3 way - tee connector is made of nylon and is used with a Quick Frame profile which has built-in ridges that bite into the fastener to create tension without the use of hardware. It provides flush connections of up to three Quick Frame profiles using only a soft-faced mallet (page 914) to form light-duty yet sturdy builds. This fastener can connect two profiles end to end with an additional 90 degree connection and is also commonly used when transitioning between standard and flanged profiles. The 3 way - tee connector requires no additional hardware and no machining services. Connecting flanged Quick Frame profiles at a 90 degree angle requires a 45 degree miter cut (see machining service on page 883) to connect without interference.

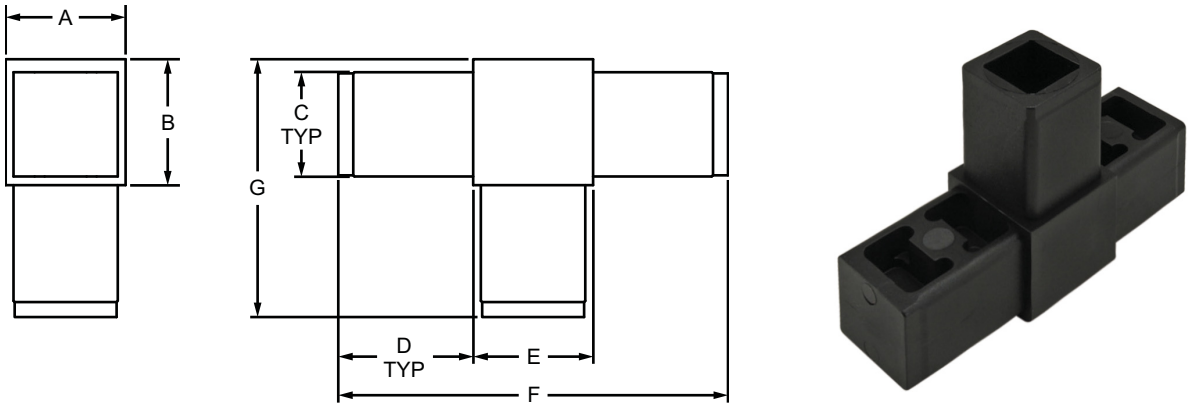

Part No.	Series	Material	Process	Color	A	B	C	D	E	F	G	Weight
9130	QF	Nylon	Injection Molded	Gray	1.000"	1.050"	.870"	1.125"	1.000"	3.250"	2.150"	.082 lb
9230	QF			Black	1.000"	1.050"	.870"	1.125"	1.000"	3.250"	2.150"	.082 lb

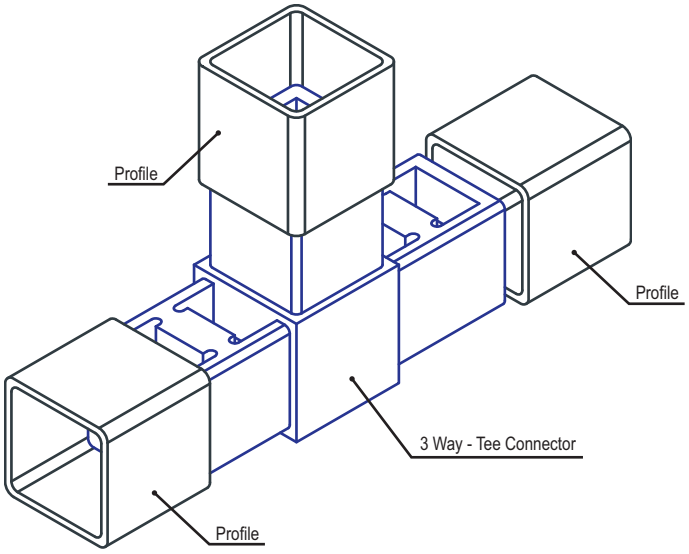

3 Way - Corner Connector

Part Description:

The 3 way - corner connector is made of nylon and is used with a Quick Frame profile which has built-in ridges that bite into the fastener to create tension without the use of additional hardware. It provides flush 90 degree connections of up to three Quick Frame profiles, convenient when you want to branch another profile off of a corner. The 3 way - corner connector is commonly used when transitioning between standard and flanged profiles and uses only a soft-faced mallet (page 914) to form light-duty yet sturdy builds. It requires no additional hardware or machining services. Connecting flanged Quick Frame profiles at a 90 degree angle requires a 45 degree miter cut (see machining service on page 883) to connect without interference.

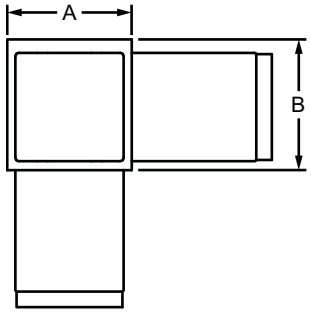

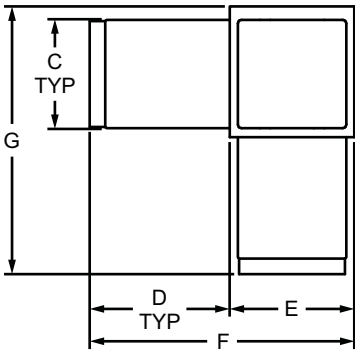

Part No.	Series	Material	Process	Color	A	B	C	D	E	F	G	Weight
9150	QF	Nylon	Injection Molded	Gray	1.000"	1.000"	.870"	1.125"	1.000"	2.125"	2.100"	.099 lb
9250	QF			Black	1.000"	1.000"	.870"	1.125"	1.000"	2.125"	2.100"	.080 lb

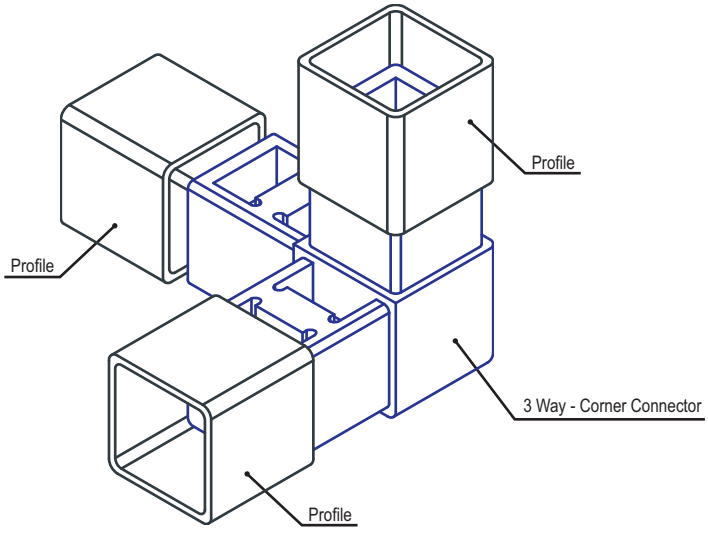

Part Description:

The 4 way - cross connector is made of nylon and is used with a Quick Frame profile which has built-in ridges that bite into the fastener to create tension without the use of additional hardware. It provides flush connections of up to four Quick Frame profiles, forming 90 degree or 180 degree connections. The 4 way - cross connector is commonly used when transitioning between standard and flanged profiles and uses only a soft-faced mallet to form light-duty yet sturdy builds. It requires no machining services or additional hardware.

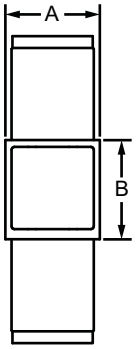

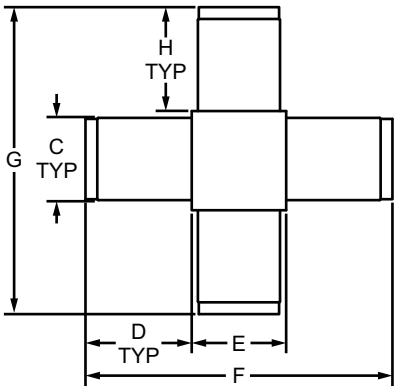

Part No.	Series	Material	Process	Color	A	B	C	D	E	F	G	H	Weight
9160	QF	Nylon	Injection Molded	Gray	1.000"	1.000"	.870"	1.125"	1.000"	3.250"	2.100"	1.110"	.124 lb
9260	QF			Black	1.000"	1.000"	.870"	1.125"	1.000"	3.250"	2.100"	1.110"	.099 lb

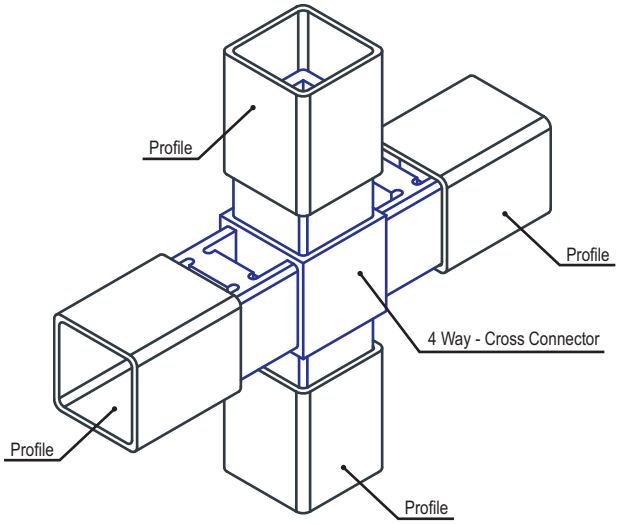

4 Way - Corner Connector

Part Description:

The 4 way - corner connector is made of nylon and is used with a Quick Frame profile which has built-in ridges that bite into the fastener to create tension without the use of additional hardware. It provides flush connections of up to four Quick Frame profiles, forming 90 degree or 180 degree connections. The 4 way - corner connector is convenient when you want to branch another profile off of a corner or straight line. The 4-way corner connector is commonly used when transitioning between standard and flanged profiles and uses only a soft-faced mallet to form light-duty yet sturdy builds. It requires no machining services or additional hardware.

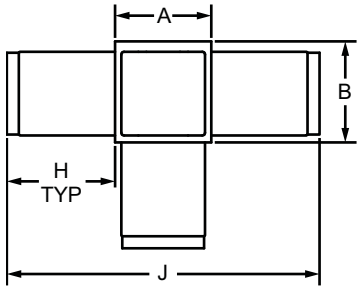

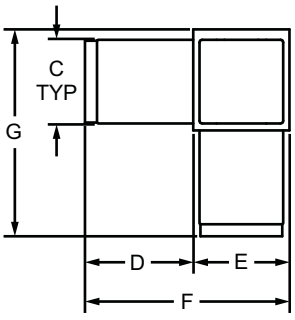

Part No.	Series	Material	Process	Color	A	B	C	D	E	F	G	H	J	Weight
9170	QF	Nylon	Injection Molded	Gray	1.000"	1.000"	.870"	1.125"	1.000"	2.125"	2.100"	1.125"	3.250"	.100 lb
9270	QF			Black	1.000"	1.000"	.870"	1.125"	1.000"	2.125"	2.100"	1.125"	3.250"	.100 lb

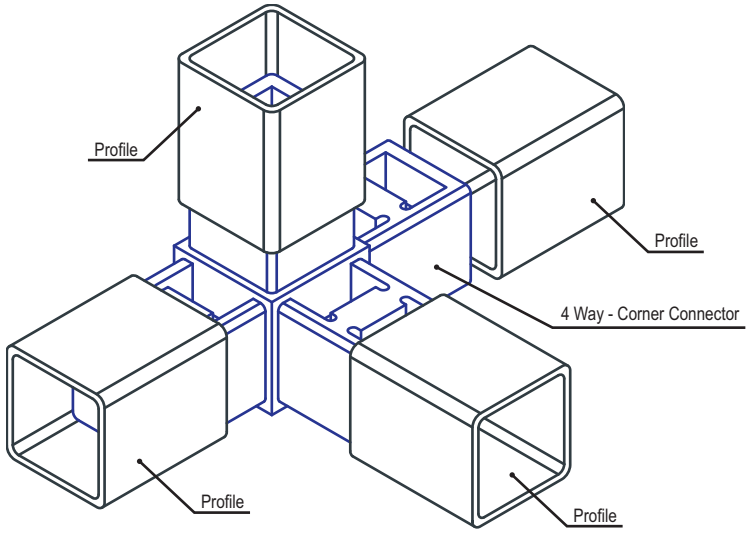

Part Description:

The 5 way - junction connector is made of nylon and is used with a Quick Frame profile which has built-in ridges that bite into the fastener to create tension without the use of additional hardware. It provides flush connections of up to five Quick Frame profiles, forming 90 degree or 180 degree connections. The 5 way - junction connector is commonly used when transitioning between standard and flanged profiles and uses only a soft-faced mallet (page 914) to form light-duty yet sturdy builds. It requires no additional hardware and no machining services.

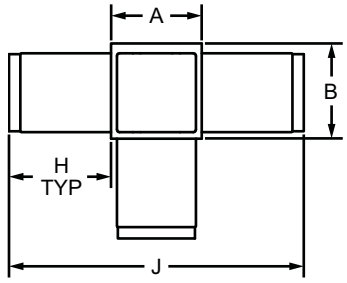

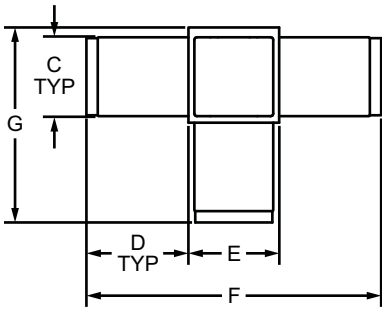

Part No.	Series	Material	Process	Color	A	B	C	D	E	F	G	H	J	Weight
9180	QF	Nylon	Injection Molded	Gray	1.000"	1.000"	.870"	1.125"	1.000"	3.250"	2.100"	1.125"	3.250"	.124 lb
9280	QF			Black	1.000"	1.000"	.870"	1.125"	1.000"	3.250"	2.100"	1.125"	3.250"	.123 lb

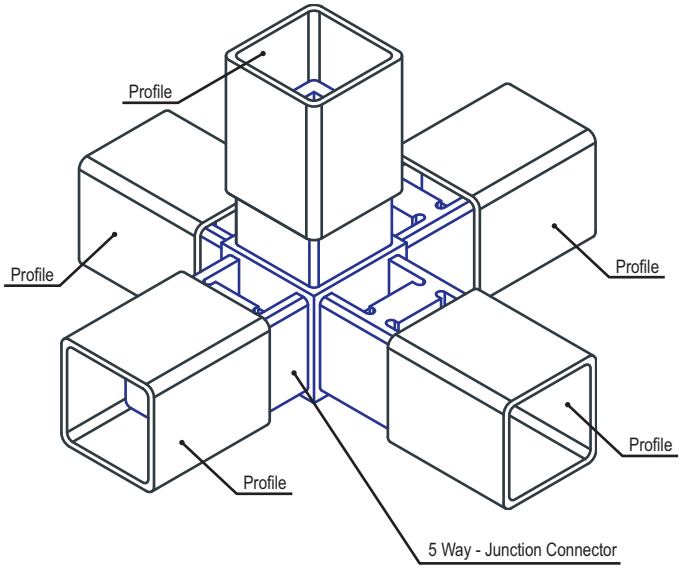

6 Way - Junction Connector

Part Description:

The 6 way - junction connector is made of nylon and is used with a Quick Frame profile which has built-in ridges that bite into the fastener to create tension without the use of additional hardware. It provides flush connections of up to six Quick Frame profiles, forming 90 degree or 180 degree connections. The 6 way - junction connector is commonly used when transitioning between standard and flanged profiles and uses only a soft-faced mallet (page 914) to form light-duty yet sturdy builds. It requires no additional hardware and no machining services.

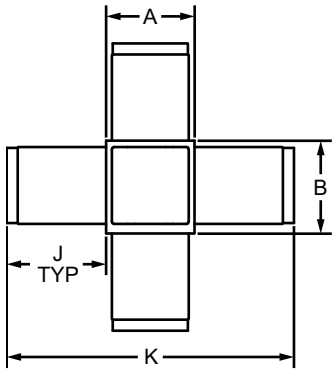

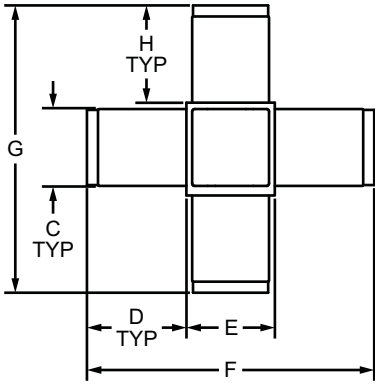

Part No.	Series	Material	Process	Color	A	B	C	D	E	F	G	H	J	K	Weight
9190	QF	Nylon	Injection Molded	Gray	1.000"	1.000"	.870"	1.125"	1.000"	3.250"	3.200"	1.100"	1.125"	3.250"	.135 lb
9290	QF			Black	1.000"	1.000"	.870"	1.125"	1.000"	3.250"	3.200"	1.100"	1.125"	3.250"	.138 lb

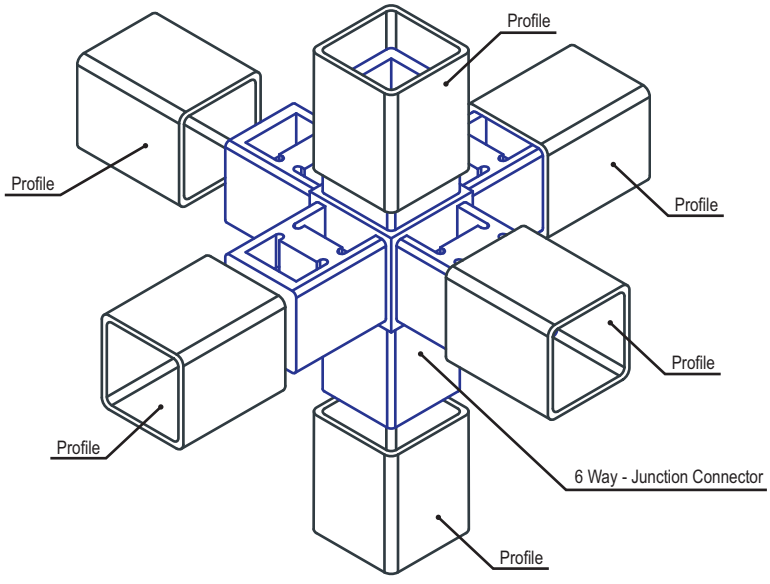

Part Description:

The caster or spacer receptacle insert is made of nylon and is used with a Quick Frame profile which has built-in ridges that bite into the fastener to create tension without the use of additional hardware. It enables the mounting of casters for mobility or the addition of spacers between profiles. The caster or spacer receptacle insert requires no machining services.

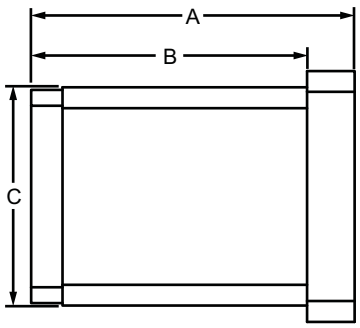

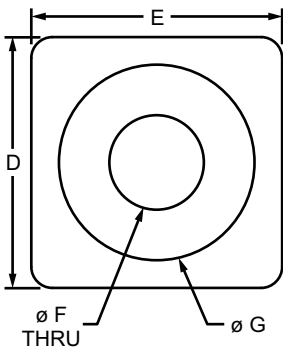

Part No.	Series	Material	Process	Color	A	B	C	D	E	F	G	Weight
9113	QF	Nylon	Injection Molded	Gray	1.290"	1.100"	.870"	1.000"	1.000"	.375"	.780" x .190" deep	.025 lb
9213	QF			Black	1.290"	1.100"	.870"	1.000"	1.000"	.375"	.780" x .190" deep	.026 lb

Profile to Profile

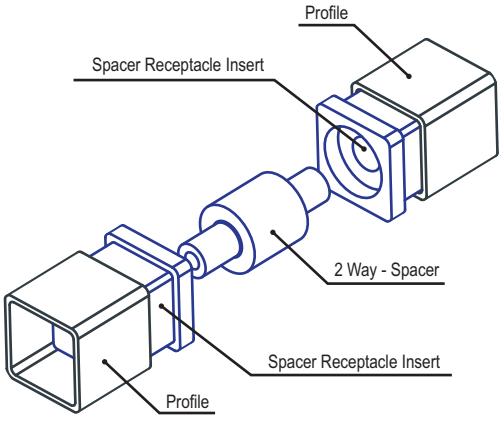

Profile to Caster

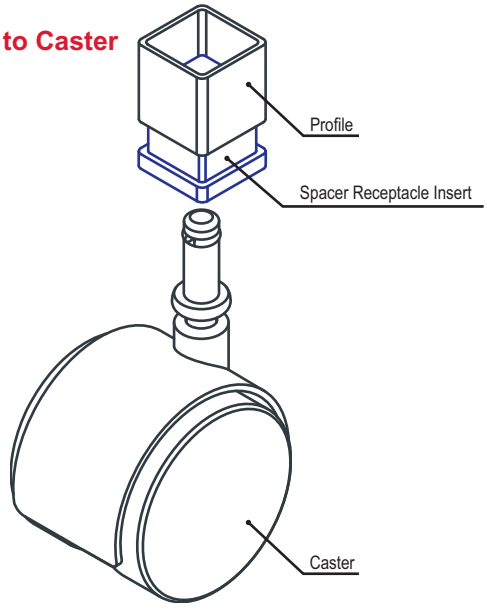

3 Way - Corner Connector with Caster or Spacer Receptacle

Part Description:

The 3 way - corner connector with caster or spacer receptacle is made of nylon and is used with a Quick Frame profile which has built-in ridges that bite into the fastener to create tension without the use of additional hardware. It enables the mounting of casters for mobility or the addition of spacers between profiles that are in a corner configuration. It is commonly used for carts or mobile storage and requires no machining services.

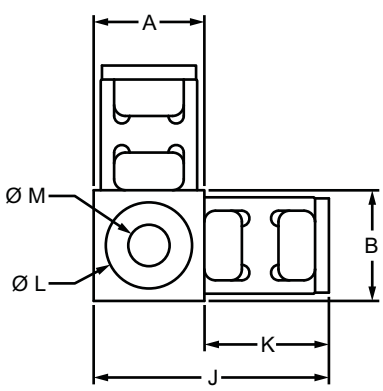

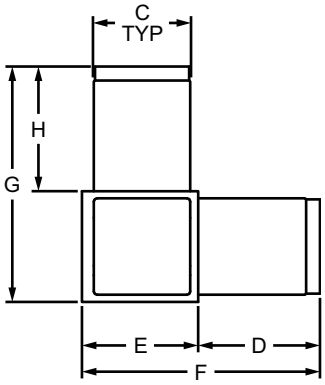

Part No.	Series	Material	Process	Color	A	B	C	D	E	F	G	H	J	K	L	M	Weight
9153	QF	Nylon	Injection Molded	Gray	1.000"	1.000"	.870"	1.100"	1.050"	1.150"	2.125"	1.125"	2.125"	1.125"	.780" x .190" deep	.375" x 1.375" deep	.092 lb
9253	QF			Black	1.000"	1.000"	.870"	1.100"	1.050"	1.150"	2.125"	1.125"	2.125"	1.125"	.780" x .190" deep	.375" x 1.375" deep	.096 lb

Profile to Profile

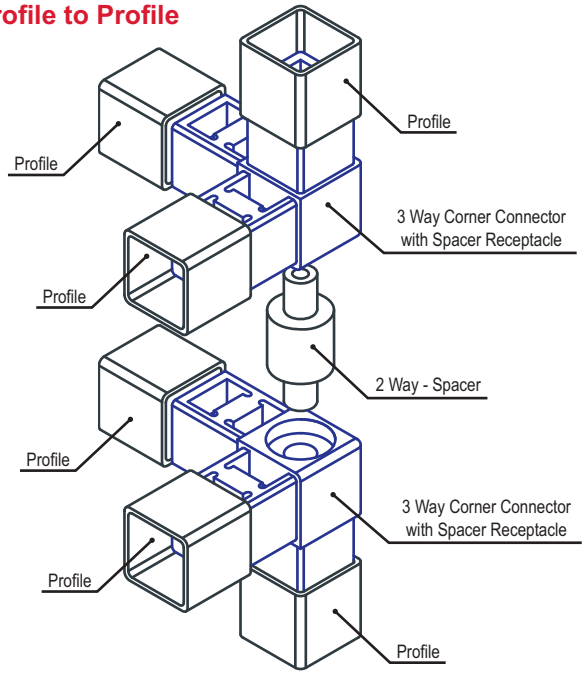

Profile to Caster

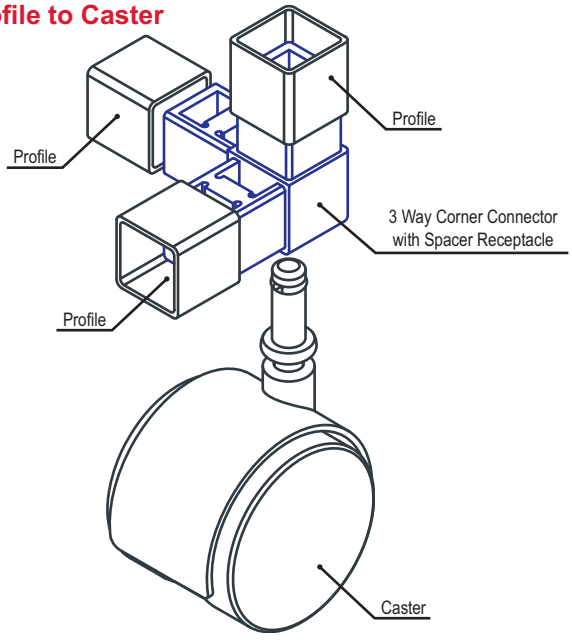

Part Description:

The 2 way - spacer is made of nylon and fits into a spacer receptacle insert (page 435) to create tension. It adds space between Quick Frame profiles to form varying lengths of bars and can also be used to provide a stable pivot for door applications. The 2 way - spacer connects profiles quickly and easily using only a soft-faced mallet to form light-duty yet sturdy builds. It requires no machining services.

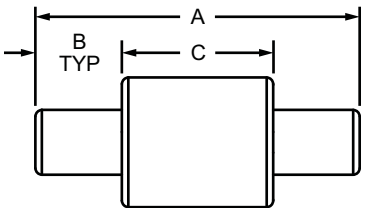

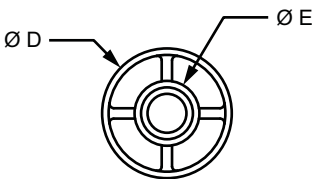

Part No.	Series	Material	Process	Color	A	B	C	D	E	Weight
9198	QF	Nylon	Injection Molded	Gray	1.875”	.500”	.870”	.770”	.375”	.013 lb

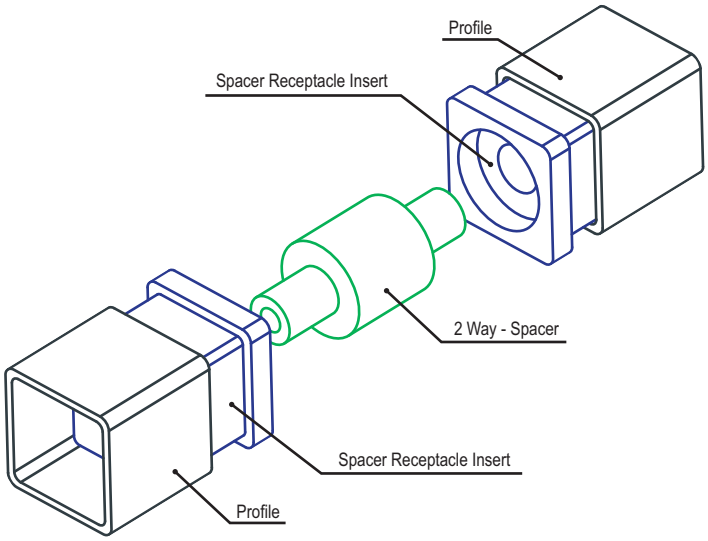

3 Way - Hexagon Segment Connector

Part Description:

The 3 way - hexagon segment connector is made of nylon and is used with a Quick Frame profile which has built-in ridges that bite into the fastener to create tension without the use of additional hardware. It creates a unique corner connection perfect in guarding and display applications and can be used with other connectors to create an enclosure. The 3 way - hexagon segment connector provides flush connections of up to three Quick Frame profiles using only a soft-faced mallet (page 914) to form light-duty yet sturdy builds. It requires no additional hardware and no machining services.

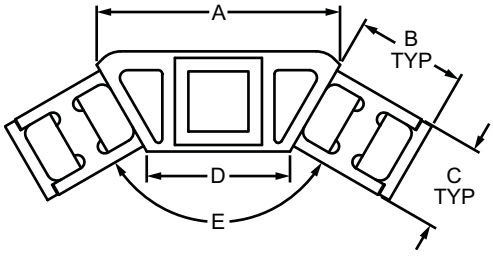

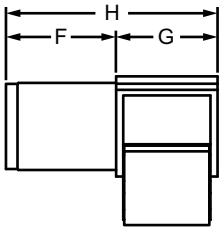

Part No.	Series	Material	Process	Color	A	B	C	D	E	F	G	H	Weight
9273	QF	Nylon	Injection Molded	Black	2.400"	1.105"	.870"	1.375"	120°	1.100"	1.102"	2.202"	.104 lb

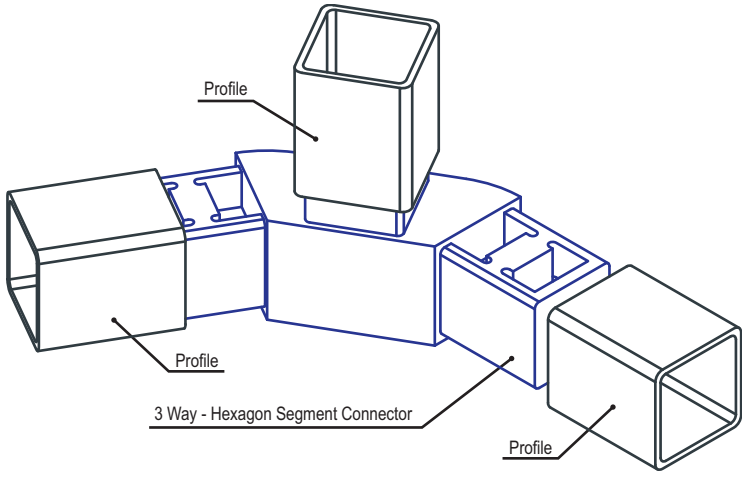

Part Description:

The 30 degree straight hexagon base connector is made of nylon and is used with a Quick Frame profile which has built-in ridges that bite into the fastener to create tension without the use of additional hardware. It can be used in combination with other connectors to create an enclosure or to add a 30 degree angle to any project. The 30 degree straight hexagon base connector is convenient for projects that will be attached or mounted to any flat surface. It provides a flush connection using only a soft-faced mallet (page 914) to form light-duty yet sturdy builds and requires no additional hardware and no machining services.

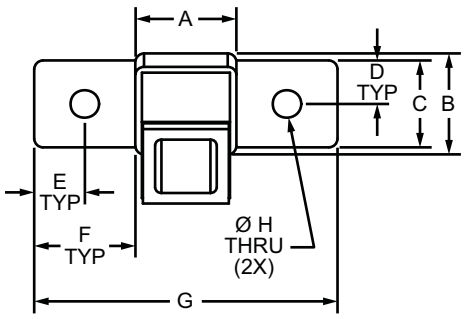

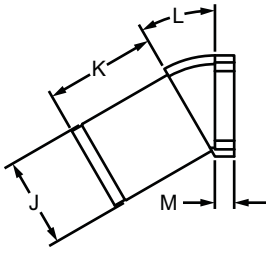

Part No.	Series	Material	Process	Color	A	B	C	D	E	F	G	H	J	K	L	M	Weight
9245	QF	Nylon	Injection Molded	Black	1.000"	1.000"	.860"	.430"	.500"	1.000"	3.000"	.281"	.870"	1.100"	30°	.190"	.043 lb

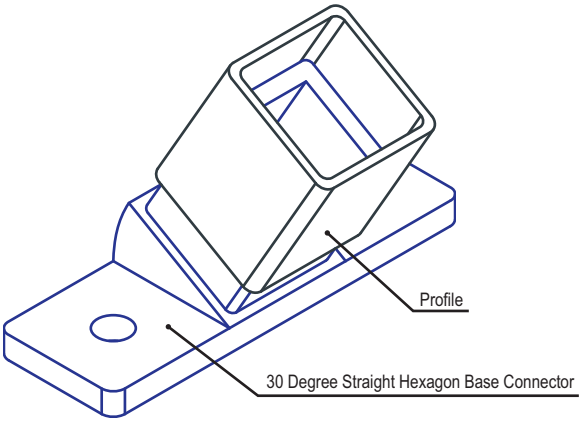

60 Degree Hexagon Side and Top Connector

Part Description:

The 60 degree hexagon side and top connector is made of nylon and is used with a Quick Frame profile which has built-in ridges that bite into the fastener to create tension without the use of additional hardware. It creates a unique connection perfect for guarding and display applications and can be used with other connectors to create an enclosure. The 60 degree hexagon side and top connector provides flush connections of up to seven Quick Frame profiles using only a soft-faced mallet (page 914) to form light-duty yet sturdy builds. The top pitch is 20 degrees. It requires no additional hardware and no machining services.

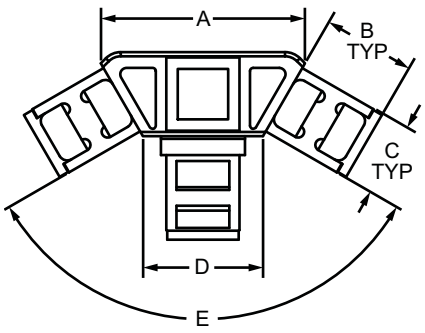

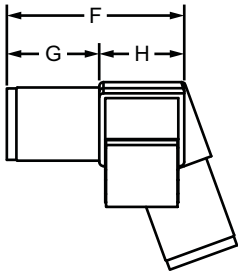

Part No.	Series	Material	Process	Color	A	B	C	D	E	F	G	H	Weight
9275	QF	Nylon	Injection Molded	Black	2.430"	1.100"	.870"	1.430"	120°	2.112"	1.100"	1.012"	.136 lb

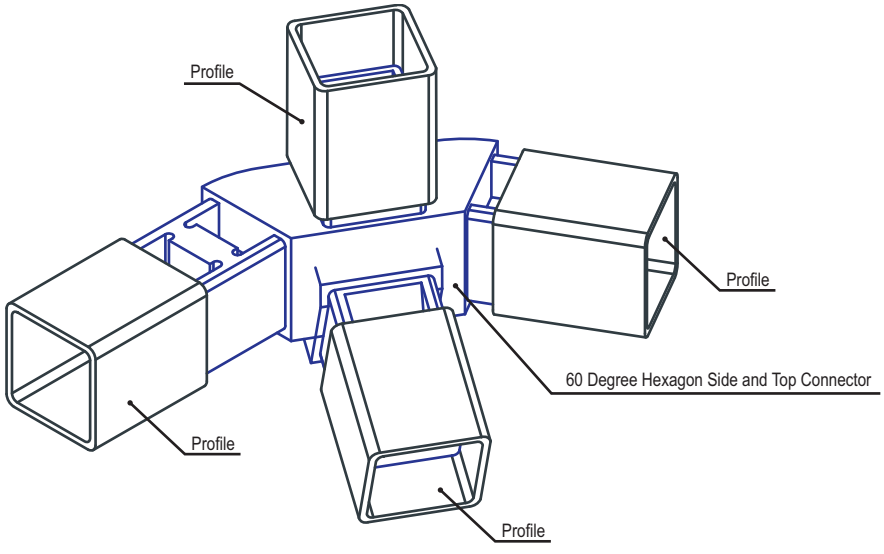

Part Description:

The 20 degree pitch hexagon connector is made of nylon and is used with a Quick Frame profile which has built-in ridges that bite into the fastener to create tension without the use of additional hardware. It creates a unique connection perfect for guarding and display applications and can be used with other connectors to create an enclosure. The 20 degree pitch hexagon connector provides flush connections of up to four Quick Frame profiles using only a soft-faced mallet (page 914) to form light-duty yet sturdy builds. It requires no additional hardware and no machining services.

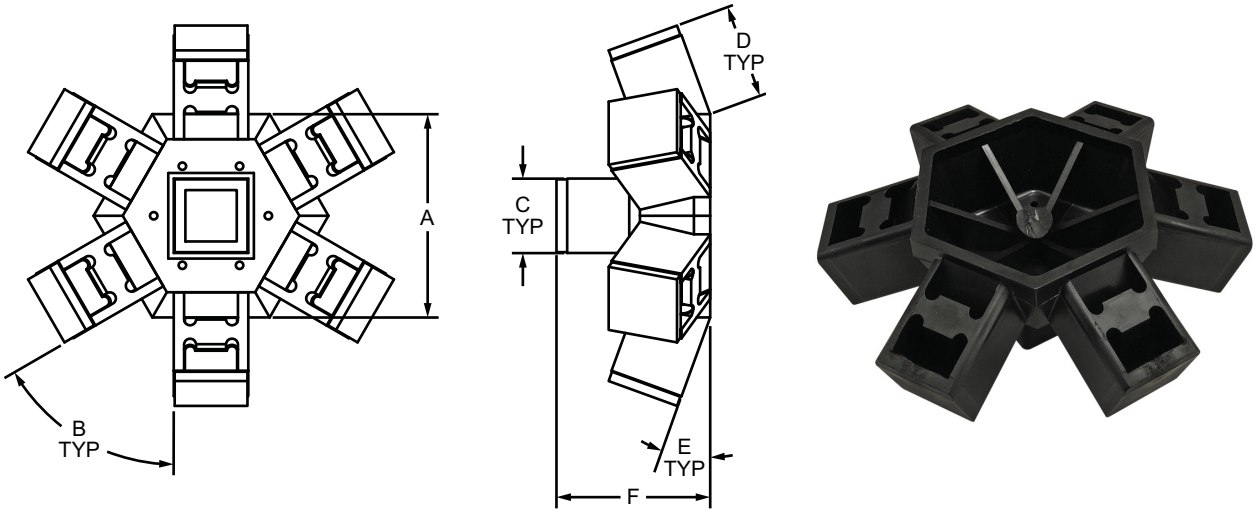

Part No.	Series	Material	Process	Color	A	B	C	D	E	F	Weight
9297	QF	Nylon	Injection Molded	Black	2.375"	60°	.870"	1.100"	20°	1.795"	.196 lb

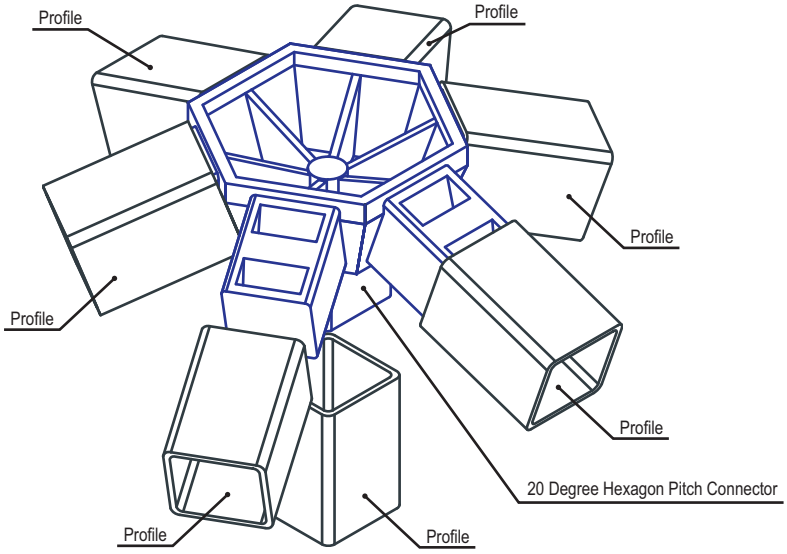

Quick Frame to 10 Series Transition Tee

Part Description:

The Quick Frame to 10 series transition tee is made of nylon and is used with a Quick Frame profile which has built-in ridges that bite into the fastener to create tension without the use of additional hardware. It is used to transition from a 1" x 1" T-slotted profile using only a soft-faced mallet (page 914) to form light-duty yet sturdy builds. The Quick Frame to 10 series transition tee requires no additional hardware and no machining services. For information on the mounting hardware for 10 series profiles see below.

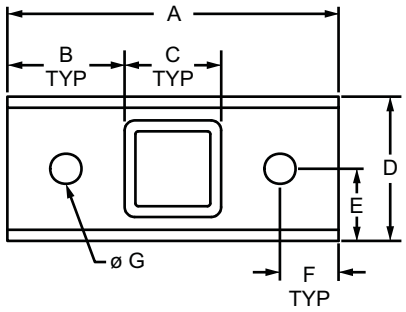

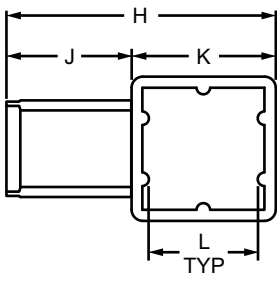

Part No.	Series	Material	Process	Color	A	B	C	D	E	F	G	H	J	K	L	Weight
9330	10 to QF	Nylon	Injection Molded	Black	3.000"	1.065"	.870"	1.300"	.650"	.528"	.281"	2.425"	1.125"	1.300"	1.000"	.077 lb

Suggested Hardware (Mount to T-Slot)

Part No.	Series	Qty.	Bolt	T-Nut
3386	10	2	1/4-20 x 3/8" FBHSCS	Slide-In

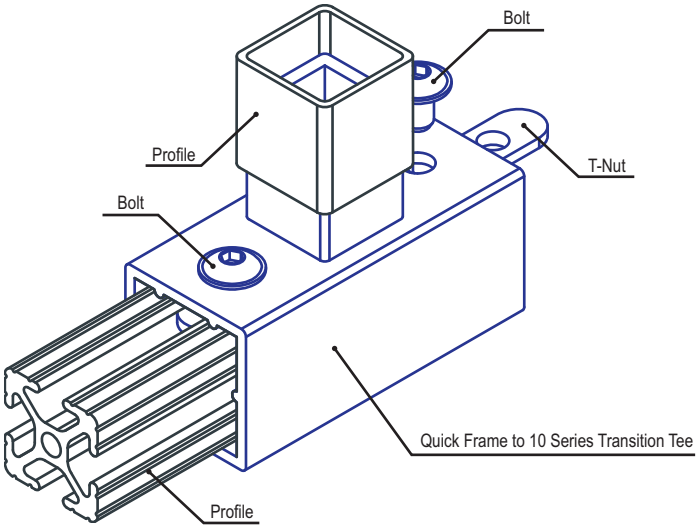

Pictorial Table Of Contents

Introduction to Panels and Doors

Page 447

Using Panels & Mesh with T-Slot

Page 448

Panel & Mesh Mounting Options
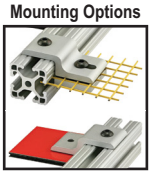
Page 449

Tips for Ordering Panels

Page 450

Motion Within the T-slot
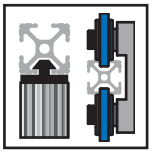
Page 450

Hinge Options

Page 451

Finishing Touches

Page 451

Panel Types

Acrylic Panels
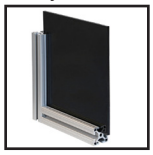
Page 452

AR Polycarbonate

Page 453

ESD Polycarbonate

Page 454

Polycarbonate
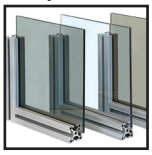
Page 455

Recycled Polycarbonate

Page 456

ABS Haircell

Page 457

Polyvinyl Chloride/ Acrylic Panels
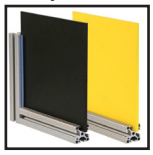
Page 458

Expanded PVC

Page 459

Aluminum Composite Panels

Page 460

Lite Aluminum Composite Panels
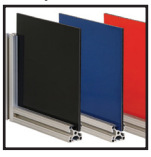
Page 461

Twin Wall Polycarbonate

Page 462

HDPE Panels
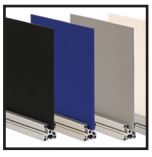
Page 463

HDPE Pegboard

Page 464

Phenolic Resin

Page 465

Solid Aluminum Plate
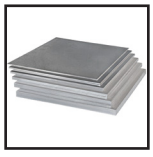
Page 466

Diamond Tread Plate

Page 467

Laminated Tabletops

Page 468

Expanded Metal

Page 469

Wire Mesh Panels
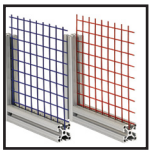
Page 470

Thermoplastic Coated Wire Mesh
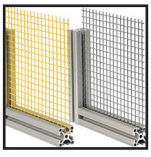
Page 471

Blocks, Clamps, Brackets, and Retainers

Detent Hinge Stopper

Page 473

Aluminum Panel Mount Block

Page 474

Lite Panel Mount Block

Page 476

Drop-in Lite Panel Mount Block

Page 477

Adjustable Panel Mount Block

Page 478

Lite Panel Mount Block Spacer
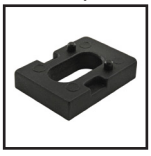
Page 479

Quick Change Panel Clamp

Page 480

CONTINUE

Pictorial Table Of Contents

Panel Mount Bracket

Page 481

Roll-in Panel Mount Bracket
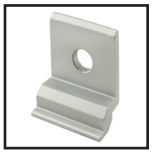
Page 482

Tabletop Fastening Kit

Page 483

Single Arm Narrow Panel Retainer

Page 484

Single Arm Wide Panel Retainer

Page 486

Double Arm Narrow Panel Retainer

Page 488

Single Arm Narrow Mesh Retainer

Page 490

Single Arm Wide Mesh Retainer

Page 492

Double Arm Narrow Mesh Retainer

Page 494

Double Arm Wide Mesh Retainer

Page 496

Narrow & Wide Backing Plate

Page 498

Single Arm Narrow Mesh Retainer with Narrow Backing Plate

Page 500

Single Arm Wide Mesh Retainer with Wide Backing Plate

Page 501

Double Arm Narrow Mesh Retainer with Narrow Backing Plate

Page 502

Double Arm Wide Mesh Retainer with Wide Backing Plate

Page 503

Single & Dual Panel Holder

Page 504

Snap On Panel Retainer

Page 505

Roll-in Mesh Panel Retainer

Page 506

Straddle Mesh Retainer & Wire Mesh Fastener

Page 507

Hinges and Roller Wheels

Economy Sliding Door Glide

Page 509

Standard Sliding Door Glide

Page 510

Standard Sliding Door Glide Profile

Page 511

Upper Door Slide Track

Page 512

Lower Door Slide Track

Page 512

Roller Wheels

Page 514

Dual Roller Wheel Bracket

Page 517

Dual Roller Wheel Bracket Assembly

Page 518

Standard Lift-Off Hinge - Right Hand with Single Long Pin

Page 519

Standard Lift-Off Hinge - Right Hand with Single Short Pin

Page 520

Standard Lift-Off Hinge - Left Hand with Single Long Pin

Page 521

Standard Lift-Off Hinge - Left Hand with Single Short Pin

Page 522

Standard Lift-Off Hinge - Mating Hub

Page 523

CONTINUE

Pictorial Table Of Contents

Standard Lift-Off Hinge with Double Short Pins

Page 524

Standard Lift-Off Hinge - Right Hand Assembly

Page 525

Standard Lift-Off Hinge - Left Hand Assembly

Page 526

Standard Captive Lift-Off Hinge Assembly

Page 527

Economy Lift-Off Hinge Right Hand with Long Pin

Page 529

Economy Lift-Off Hinge Right Hand with Short Pin

Page 530

Economy Lift-Off Hinge Left Hand with Long Pin

Page 531

Economy Lift-Off Hinge Left Hand with Short Pin

Page 532

Economy Lift-Off Hinge Assembly

Page 533

4 Hole - Concealed Hinge

Page 534

4 Hole - Plastic Lift-Off Hinge

Page 535

2 Hole - Plastic Lift-Off Hinge

Page 537

3 Hole - Plastic Double Lift-Off Hinge

Page 538

4 Hole - Dual Hand Lift-Off Hinge

Page 539

4 Hole - Adjustable Hinge

Page 540

4 Hole - Adjustable Tension Panel Hinge

Page 541

4 Hole - Detent Panel Hinge

Page 542

4 Hole - Detent Positioning Hinge

Page 543

4 Hole - Constant Friction Hinge

Page 544

4 Hole - Aluminum Hinge

Page 545

2 Hole - Standard Plastic Hinge

Page 546

4 Hole - Standard Plastic Hinge

Page 547

4 Hole - Horizontal Adjustment Plastic Hinge

Page 548

4 Hole - Standard Plastic Hinge with Snap Cover

Page 549

4 Hole - Economy Zinc Hinge

Page 550

4 Hole - Transition Hinge

Page 551

4 Hole - Standard Stainless Steel Hinge

Page 552

4 Hole - Zinc Hinge

Page 553

4 Hole - Locking Zinc Hinge

Page 554

4 Hole - Slotted Zinc Hinge

Page 555

4 Hole - Slotted Locking Zinc Hinge

Page 556

Lite Panel Hinge

Page 557

CONTINUE

Pictorial Table Of Contents

Handles and Latches

Plastic Door Handle

Page 558

Offset Plastic Handle

Page 559

Ergonomic Plastic Handle

Page 560

Aluminum Door Handle

Page 561

Ready Tube® Aluminum Handle

Page 562

Steel Door Handle

Page 563

Flush Plastic Panel Handle

Page 564

Aluminum Handle
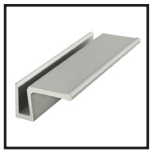
Page 565

Locking Plastic Panel Grabber™ Handle

Page 566

Deluxe Door Handle with Pawl Kit

Page 567

Deluxe Door Handle Mating Handle

Page 568

Furniture Style Handle

Page 569

Furniture Style Handle Pawl Kit

Page 571

Slam Latch

Page 572

Velcro® Latch
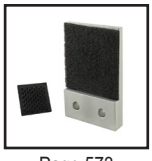
Page 573

0 Degree Deadbolt Latch

Page 574

90 Degree Deadbolt Latch

Page 575

Grabber™ Door Catch

Page 576

Grabber™ Door Catch Mounting Plate

Page 577

Magnetic Door Catch

Page 579

Magnetic Door Catch Bracket

Page 580

Nylon Magnetic Door Catch

Page 581

Single Ball Catch

Page 582

Double Ball Catch

Page 583

Tension Ball Latch

Page 584

Sliding Door Lock

Page 585

Panel Stiffener

Page 586

Standard Panel Gasket

Page 587

Economy Panel Gasket
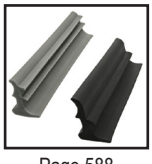
Page 588

Rubber Door Seal

Page 589

Wire Edge

Page 590

Aluminum Door Stop

Page 591

Nylon Door Stop

Page 592

Introduction to Panels & Doors

80/20 has an extensive in-house panel shop with a wide variety of wire, mesh and plastic panels. Our panels are frequently integrated into design plans and builds. They are great for guarding, enclosures, desk tops and shelves, among other applications. 80/20 carries an impressive stock of almost 100 panels in different sizes, shapes, thicknesses, colors, and materials. Keep in mind that 80/20 mesh, plastic panels, and aluminum plates are ordered by the square foot or square meter.

When deciding on your panel you'll want to make a thorough assessment of your needs. You will find that you have several choices to consider when incorporating paneling into your projects.

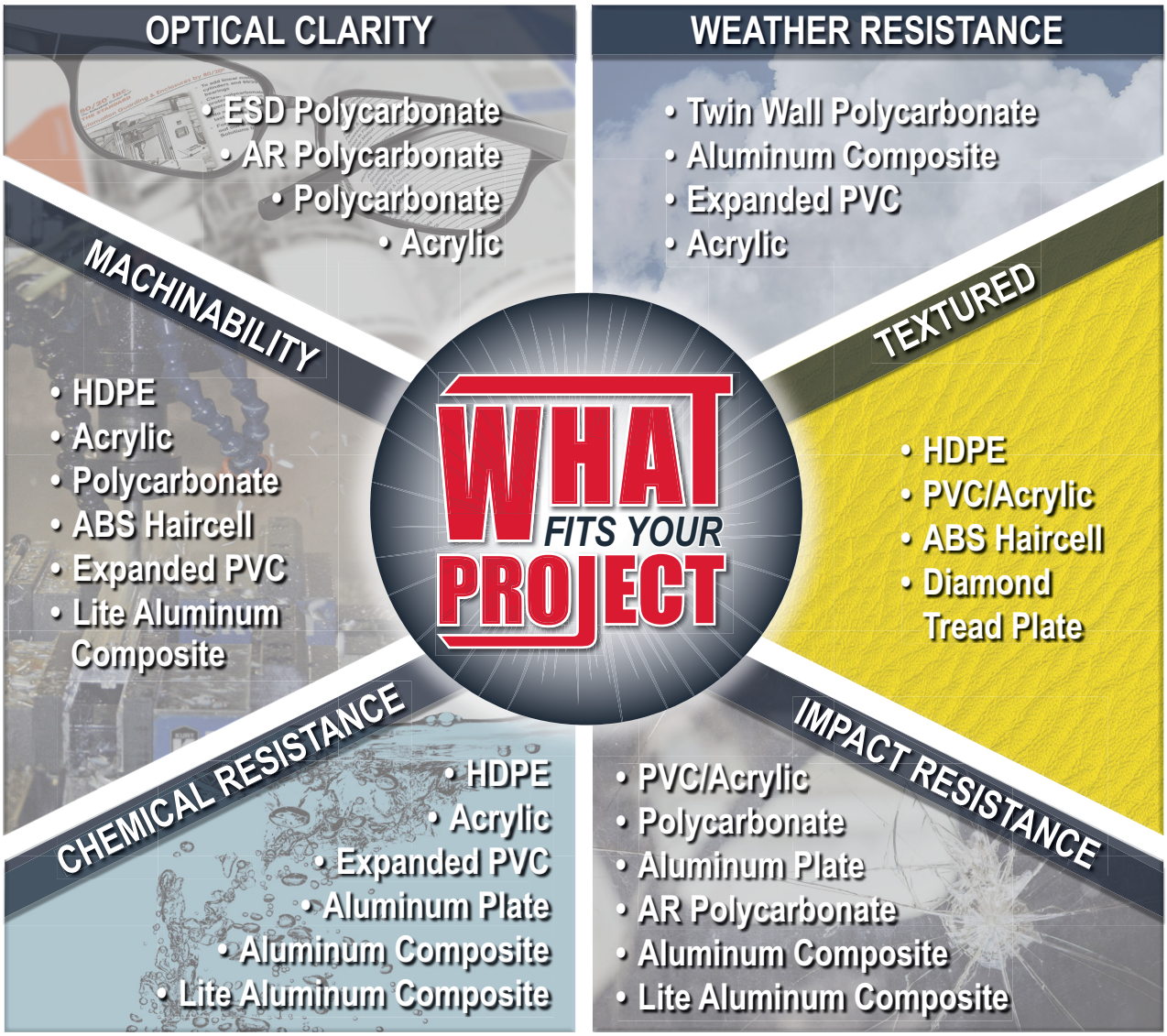

Expanded Metal & Wire Mesh

Expanded metal and wire mesh panels work well for guarding and enclosure applications where air flow is required. They provide a barrier and can be used to block off a machine, supplies, inventory, or equipment while still providing visual access. They are strong yet lightweight and are available in a range of materials and colors.

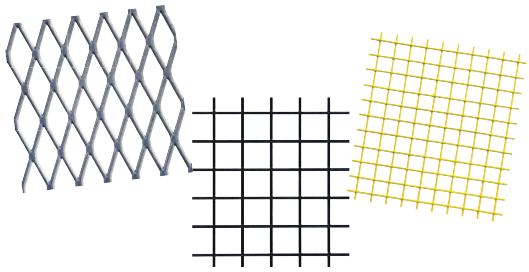

How Panels Are Used with T-Slot

80/20 panels and mesh retainers can be used a couple different ways with T-slot profiles. You can either rest the panel in the T-slot or mount it flush with the T-slot profile. Guarding, enclosures, and access points lend themselves well to panels that rest within the profile while desks and furniture applications commonly have flush panels.

Tip: When sizing a panel that will be inserted into the T-slot, be sure to add extra material to your visible panel size.

Quick Frame: For flanged Quick Frame subtract 0.14" of the visible panel size.

Series	Add
10	.500"
15	.750"
20	10mm
25	14mm
30	15mm
40	22mm
45	24mm

Panel & Mesh Mounting Options

You have several options when it comes to mounting your panels and mesh. Consider your application; Is it being used to keep things in or out or both? Are you using a mesh panel? Will you be changing out the panel often? Will the project be used inside or outside?

The answer to these questions will help determine the type of mounting option you will want to use.

Retainers

Blocks

Gasket

Retainers are easy to use and available in several sizes and shapes to fit your needs.

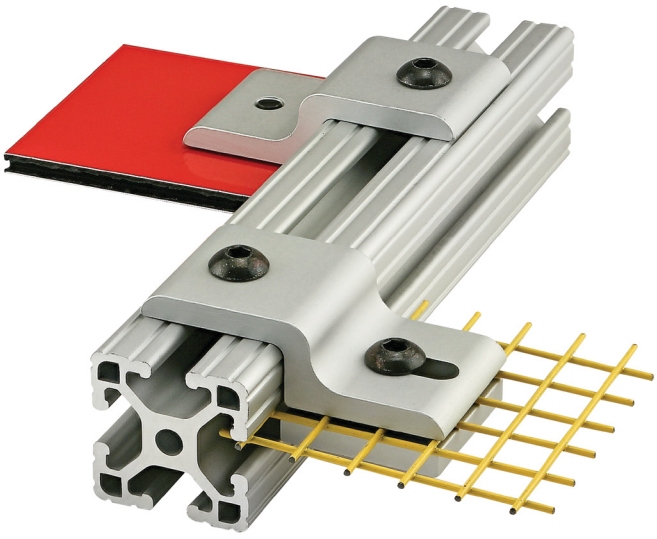

Panel Retainers:

- Strong
- Cost-effective
- Corrosion-resistant
- Indoor or Outdoor Use
- Requires drill-through hole in panel

Mesh Retainers:

- Strong
- Cost-effective
- Corrosion-resistant
- Indoor or Outdoor Use
- Includes a backing plate
- No machining required
- Slotted holes for adjustability

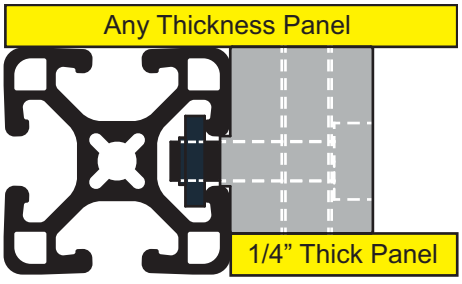

Panel Mount Blocks are a great way to mount your panel either flush with the profile or on the profile surface. They provide stability while reducing vibration and there are options available in aluminum or nylon.

Panel Gasket is a great finishing touch for your project. Use it to help secure your panel and prevent it from rattling within the frame. Keep in mind that you only need to put panel gasket on one side of the panel. Here are a few other tips when using panel gasket:

- If you are having trouble installing the gasket, use a little bit of automotive vinyl protectant.
- Cut your panel gasket 2-3 inches (50-76mm) longer than the opening to make the corners stay tight.
- When installing panel gasket, begin in the middle of your panel and work your way out.

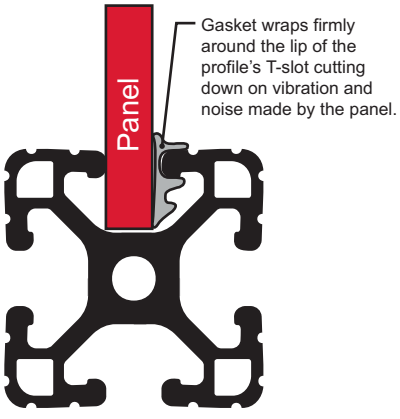

Tips for Ordering Panels

PLEASE NOTE A DRAWING IS REQUIRED

Panel Orientation:

When ordering panels it is important to indicate orientation:

Expanded Metal:

Specify horizontal or vertical diamond orientation.

Twin Wall Polycarbonate:

Specify horizontal or vertical channel orientation.

Phenolic Resin:

Specify horizontal or vertical woodgrain orientation.

Textured Side:

Panels like PVC/Acrylic and ABS Haircell have a textured and smooth side. When machining is needed it's important to indicate which is outward with "T" for textured or "S" for smooth.

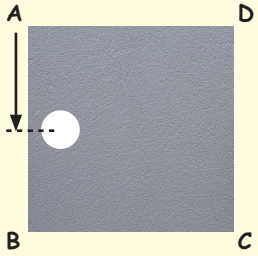

Machining Reference:

Beginning with the upper left corner, call outs are designated A, B, C, and D in a counterclockwise direction on panels. Referencing these call outs when ordering machining allows for proper measuring of the service position.

In this example, the service center line is measured down from A.

Motion within the T-slot

Door glides and roller wheels slide within the T-slot channel to enable movement of a door, panel, frame or other component. Create accessible displays or an entrance with a bi-fold door.

Glides are simple to use and bolt directly to a profile end to freely rotate as the door or application pivots. There is an option available that creates a bi-fold door without the use of a bottom rail.

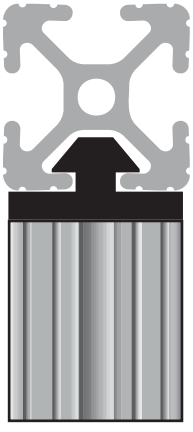

Roller wheels mount directly to a T-slot or profile end and are ideal for guided linear motion. They are made of self-lubricating nylon with a permanent lubricated bushing available which reduces maintenance time and cost.

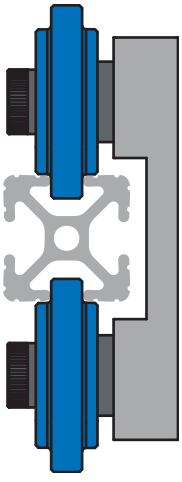

Variety of Hinge Options

80/20 offers a wide assortment of hinges in a variety of styles, materials, and sizes that can be mounted to a panel or profile to fit your requirements. From light to heavy-duty projects, there are a range of options available; choose from different materials such as plastic, zinc, or aluminum.

- Plastic hinges are typically used for lightweight doors and to connect plastic panels while aluminum hinges are a heavier-duty option.
- Lift-off hinges are popular as they can create a door that lifts off by using all right or all left lift-off hinges, or confine a door or access point by using a combination of left and right hinges.

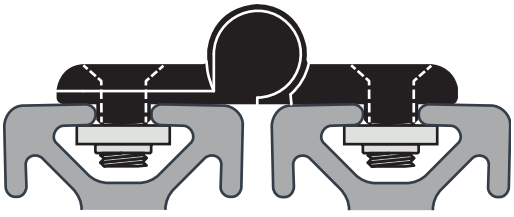

Tip: To increase its load-bearing capacity and prevent it from rotating, choose hinges with slot tabs or slot pins. If needed, the tabs and pins can be removed when, for example, a panel is being mounted.

Finishing Touches, Handles & More

80/20 has a wide range of handles, locks and catches for your door or access point. Start off by deciding how frequently the door will be in use and whether you will want it to be locked.

Unlocked

Locked

If people will be using it often, consider ergonomic handles or offset handles that hinder finger-pinching injuries. There are also flush handles to prevent snags or heavy-duty latches for larger doors or magnetic catches to help ensure a connection.

Acrylic Panels

Part Description:

Acrylic panels are a cost-effective lightweight option that provides high optical clarity. It is stable up to 180 degrees Fahrenheit and weather resistant, making it ideal for both indoor and outdoor applications. Acrylic is more impact resistant than glass while being half the weight. It is easily machined and comes in a range of colors and thicknesses. This panel is commonly used in displays, signs, furniture and partitions.

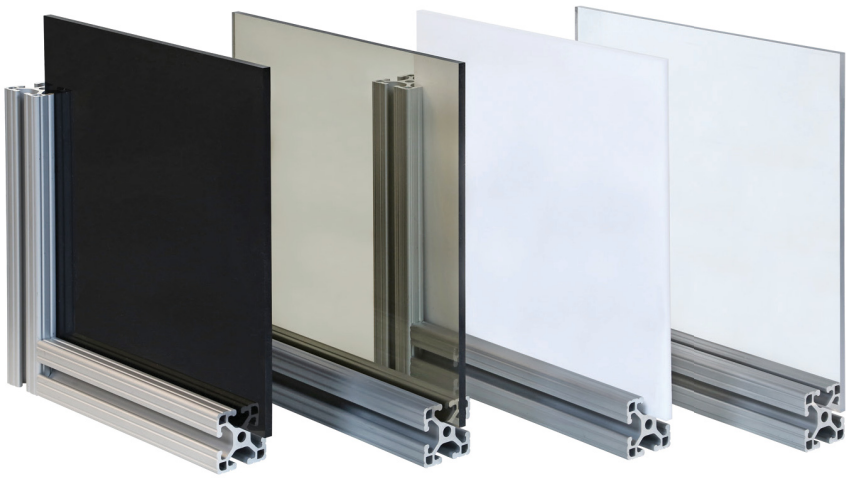

Black Bronze White Clear

Part No. (Metric)	Series	Color	Material	Thickness	Stock Sheet Size	Weight
2601 (65-2601)	F M	Clear	Acrylic	.220 - .236" (6mm)	48" x 96" + .250/-0 (1219.2mm x 2438.4mm + 6.35/-0)	1.450 lb / ft² (6.24 kg / m²)
2602 (65-2602)	F M	Clear		.177" (4.5mm)		.840 lb / ft² (5.22 kg / m²)
2603 (65-2603)	F M	White		.220 - .236" (6mm)		1.450 lb / ft² (6.53 kg / m²)
2604 (65-2604)	F M	White		.177" (4.5mm)		.840 lb / ft² (4.87 kg / m²)
2605 (65-2605)	F M	Black		.220 - .236" (6mm)		1.450 lb / ft² (6.44 kg / m²)
2606 (65-2606)	F M	Black		.177" (4.5mm)		.840 lb / ft² (4.89 kg / m²)
2607 (65-2607)	F M	Bronze		.220 - .236" (6mm)		1.450 lb / ft² (6.31 kg / m²)
2608 (65-2608)	F M	Bronze		.177" (4.5mm)		.840 lb / ft² (4.86 kg / m²)

Standard Machining Services

Machining Type	Reference Page
Cut-to-Size	884
Drill Thru	905

Part Description:

AR polycarbonate panels are a durable option that provides high optical clarity and impact resistance. It is more abrasion and UV resistant than polycarbonate panels and stable up to 240 degrees Fahrenheit, making it ideal for both indoor and outdoor applications. AR polycarbonate is commonly used in enclosures and safety applications in high-traffic areas.

Clear

Part No. (Metric)	Series	Color	Material	Thickness	Stock Sheet Size	Weight
2641 (65-2641)	F M	Clear	AR Polycarbonate	.177" (4.5mm)	48" x 96" + .250/-0 (1219.2mm x 2438.4mm + 6.35/-0)	1.150 lb / ft² (5.293 kg / m²)
2642 (65-2642)	F M	Clear		.220 - .236" (6mm)		1.500 lb / ft² (6.672 kg / m²)

Standard Machining Services

Machining Type	Reference Page
Cut-to-Size	884
Drill Thru	905

ESD Polycarbonate Panels

Part Description:

Electrostatic dissipative (ESD) polycarbonate panels are designed to prohibit static electricity. It is a lightweight option that has excellent impact and chemical resistance. ESD has superior clarity while being easy to machine, providing design versatility and flexibility. This panel is useful in clean room, medical, and manufacturing processes where you want to minimize the occurrence and likelihood of static shock.

Clear

Part No. (Metric)	Series	Color	Material	Thickness	Stock Sheet Size	Weight
2648 (65-2648)	F M	Clear	ESD Polycarbonate	.250" (6.35mm)	48" x 96" + .250/-0 (1219.2mm x 2438.4mm + 6.35/-0)	1.531 lb / ft² (7.480 kg / m²)
2649 (65-2649)	F M	Clear		.187" (4.750mm)		1.088 lb / ft² (5.310 kg / m²)

Standard Machining Services

Machining Type	Reference Page
Cut-to-Size	884
Drill Thru	905

Part Description:

Polycarbonate panels are durable and provide impact resistance, making it ideal for industrial applications. This panel is two hundred times stronger than glass and thirty times stronger than acrylic. It has high optical clarity while being stable up to 240 degrees Fahrenheit. Polycarbonate is easily machined with simple hand tools and resists cracking, chipping or breaking when cut or drilled.

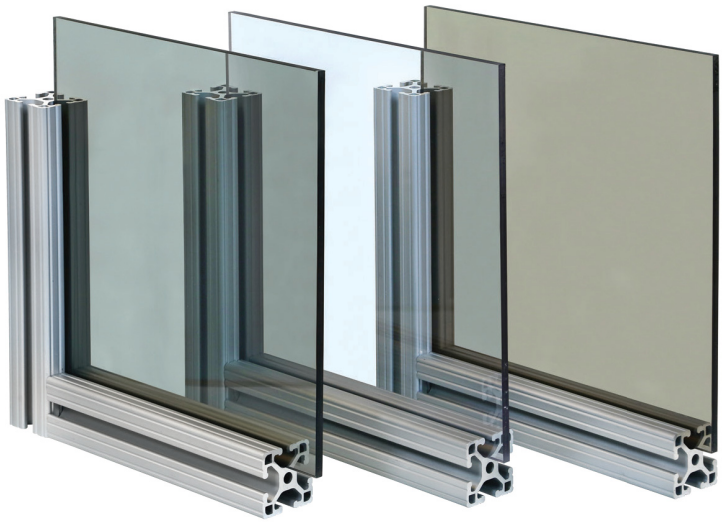

Gray Clear Bronze

Part No. (Metric)	Series	Color	Material	Thickness	Stock Sheet Size	Weight
2645 (65-2645)	F M	Clear	Polycarbonate	.500" (12.7mm)	48" x 96" + .250/-0 (1219.2mm x 2438.4mm + 6.35/-0)	3.120 lb / ft² (14.586 kg / m²)
2644 (65-2644)	F M	Clear		.375" (9.5mm)		2.340 lb / ft² (11.017 kg / m²)
2609 (65-2609)	F M	Clear		.220 - .236" (6mm)	48" x 96" + .250/-0 (1219.2mm x 2438.4mm + 6.35/-0) 60" x 96" + .250/-0 (1524.0mm x 2438.4mm + 6.35/-0)	1.500 lb / ft² (6.465 kg / m²)
2610 (65-2610)	F M	Clear		.177" (4.5mm)	48" x 96" + .250/-0 (1219.2mm x 2438.4mm + 6.35/-0)	1.150 lb / ft² (5.362 kg / m²)
2643 (65-2643)	F M	Clear		.118" (3mm)		.737 lb / ft² (3.517 kg / m²)
2611 (65-2611)	F M	Bronze		.220 - .236" (6mm)		1.500 lb / ft² (6.965 kg / m²)
2612 (65-2612)	F M	Bronze		.177" (4.5mm)		1.150 lb / ft² (5.310 kg / m²)
2629 (65-2629)	F M	Gray		.220 - .236" (6mm)		1.500 lb / ft² (6.396 kg / m²)
2630 (65-2630)	F M	Gray		.177" (4.5mm)		1.150 lb / ft² (5.362 kg / m²)

Standard Machining Services

Machining Type	Reference Page
Cut-to-Size	884
Drill Thru	905

Recycled Polycarbonate Panels

Part Description:

Recycled polycarbonate panels are durable and provide impact resistance, making it ideal for industrial applications. Polycarbonate is two hundred times stronger than glass and thirty times stronger than acrylic. This panel is made of recycled material and may appear tinted. Recycled polycarbonate panels are stable up to 240 degrees Fahrenheit, easily machined, and resists cracking, chipping or breaking when cut or drilled.

Clear

Part No. (Metric)	Series	Color	Material	Thickness	Stock Sheet Size	Weight
2646 (65-2646)	F M	Clear	Recycled Polycarbonate	.220 - .236" (6mm)	48" x 96" + .250/-0 (1219.2mm x 2438.4mm + 6.35/-0)	1.500 lb / ft² (6.517 kg / m²)
2647 (65-2647)	F M	Clear		.177" (4.5mm)		1.150 lb / ft² (5.155 kg / m²)

Standard Machining Services

Machining Type	Reference Page
Cut-to-Size	884
Drill Thru	905

Part Description:

Acrylonitrile butadiene styrene (ABS) haircell panels are a cost-effective option that has one smooth side and one textured side which hides scratches and marks. It provides impact resistance and is stable up to 180 degrees Fahrenheit. ABS haircell is easily machined with simple hand tools and resists cracking, chipping or breaking when cut or drilled. It is commonly used in furniture, workstations, displays and partitions.

Black

Part No. (Metric)	Series	Color	Material	Thickness	Stock Sheet Size	Weight
2613-S (65-2613-S)	F M	Black	ABS	.236" (6.mm)	48" + .250/-0 x 96" +.500/-0 (1219.2mm + 6.35/-0 x 2438.4mm + 12.7/-0)	1.700 lb / ft² (5.689 kg / m²)
2613-T (65-2613-T)	F M	Black		.236" (6.mm)		1.700 lb / ft² (5.689 kg / m²)
2614-S (65-2614-S)	F M	Black		.177" (4.5mm)		1.000 lb / ft² (4.965 kg / m²)
2614-T (65-2614-T)	F M	Black		.177" (4.5mm)		1.000 lb / ft² (4.965 kg / m²)

See page 450 for important ordering information.

Standard Machining Services

Machining Type	Reference Page
Cut-to-Size	884
Drill Thru	905

PVC/Acrylic Panels

Part Description:

Polyvinyl Chloride (PVC) / Acrylic panels are impact and chemical resistant with an option for either a smooth finish or a texture on one side which hides scratches and marks. It is stable up to 160 degrees Fahrenheit and is available in black or yellow. PVC/Acrylic is commonly used in exhibits, displays, signs, and fixtures.

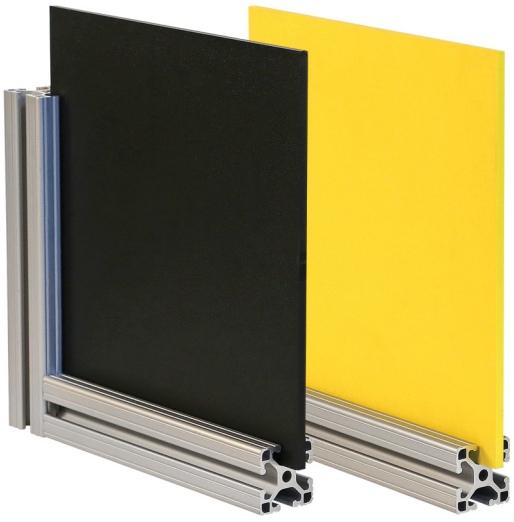

Black Yellow

Part No. (Metric)	Series	Color	Material	Thickness	Stock Sheet Size	Weight
2660-S (65-2660-S)	F M	Black	PVC Acrylic	.187" (4.70mm)	48" x 96" + .375/-0 (1219.2mm x 2438.4mm + 9.50/-0)	1.239 lb / ft² (6.189 kg / m²)
2660-T (65-2660-T)	F M	Black		.187" (4.70mm)		1.239 lb / ft² (6.189 kg / m²)
2661-S (65-2661-S)	F M	Black		.250" (6.30mm)		1.728 lb / ft² (8.436 kg / m²)
2661-T (65-2661-T)	F M	Black		.250" (6.30mm)		1.728 lb / ft² (8.436 kg / m²)
2662-S (65-2662-S)	F M	Yellow		.187" (4.70mm)		1.224 lb / ft² (6.103 kg / m²)
2662-T (65-2662-T)	F M	Yellow		.187" (4.70mm)		1.224 lb / ft² (6.103 kg / m²)
2663-S (65-2663-S)	F M	Yellow		.250" (6.30mm)		1.440 lb / ft² (7.030 kg / m²)
2663-T (65-2663-T)	F M	Yellow		.250" (6.30mm)		1.440 lb / ft² (7.030 kg / m²)

See page 448 for important ordering information.

Standard Machining Services

Machining Type	Reference Page
Cut-to-Size	884
Drill Thru	905

Part Description:

Expanded polyvinyl chloride (PVC) panels are a lightweight, cost-effective option available in six colors. This panel is both chemical and weather resistant while being stable up to 140 degrees Fahrenheit. Expanded PVC panels are commonly used in signs, displays, and exhibits.

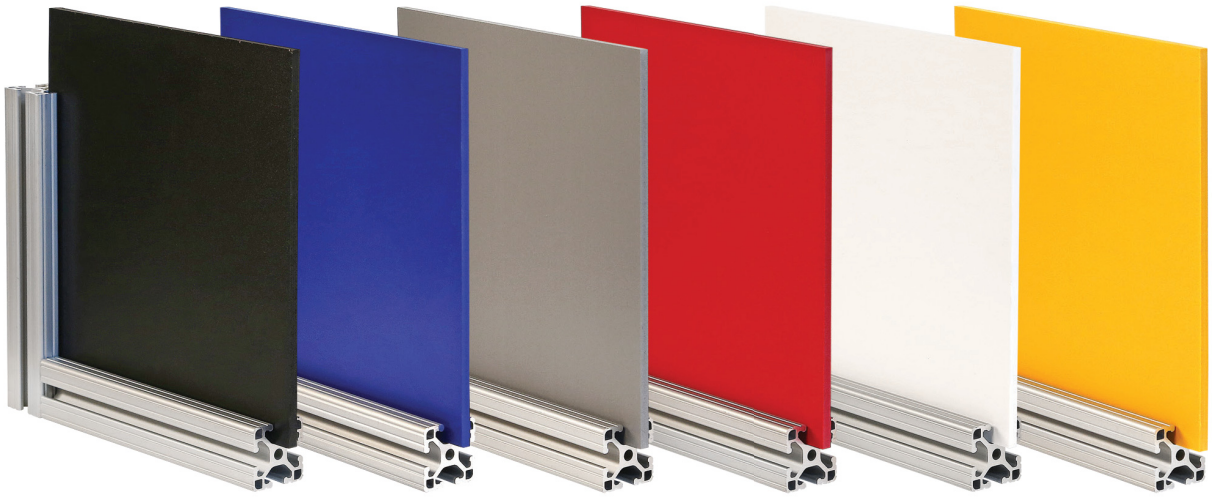

Black Blue Gray Red White Yellow

Part No. (Metric)	Series	Color	Material	Thickness	Stock Sheet Size	Weight
2615 (65-2615)	F M	White	PVC	.236" (6mm)	48" + .197/-0 x 96" + .394/-0 (1219.2mm + 5.0/-0 x 2438.4mm + 10.0/-0)	.625 lb / ft² (3.051 kg / m²)
2616 (65-2616)	F M	White		.118" (3mm)		.438 lb / ft² (2.136 kg / m²)
2617 (65-2617)	F M	Black		.236" (6mm)		.625 lb / ft² (3.051 kg / m²)
2618 (65-2618)	F M	Black		.118" (3mm)		.438 lb / ft² (2.136 kg / m²)
2619 (65-2619)	F M	Red		.236" (6mm)		.625 lb / ft² (3.051 kg / m²)
2620 (65-2620)	F M	Red		.118" (3mm)		.438 lb / ft² (2.136 kg / m²)
2621 (65-2621)	F M	Blue		.236" (6mm)		.625 lb / ft² (3.051 kg / m²)
2622 (65-2622)	F M	Blue		.118" (3mm)		.438 lb / ft² (2.136 kg / m²)
2623 (65-2623)	F M	Gray		.236" (6mm)		.625 lb / ft² (3.051 kg / m²)
2624 (65-2624)	F M	Gray		.118" (3mm)		.438 lb / ft² (2.136 kg / m²)
2631 (65-2631)	F M	Yellow		.236" (6mm)		.625 lb / ft² (3.051 kg / m²)
2632 (65-2632)	F M	Yellow		.118" (3mm)		.438 lb / ft² (2.136 kg / m²)

Standard Machining Services

Machining Type	Reference Page
Cut-to-Size	884
Drill Thru	905

Aluminum Composite Panels

Part Description:

Aluminum composite panels are a strong and durable option while being half the weight of aluminum. It provides impact and weather resistance and is stable up to 175 degrees Fahrenheit. This panel is easily machined and resists buckling and warping. Aluminum composite panels are commonly used in guarding, enclosures and workstations.

Platinum

Part No.	Series	Color	Material	Thickness	Stock Sheet Size	Weight
2650	F	Platinum	Aluminum Composite	.236"	50" x 122" +/- .079	1.490 lb / ft^2
65-2650	M			6mm	1270mm x 3098.8mm + 2.0/-0	7.068 kg / m^2

Standard Machining Services

Machining Type	Reference Page
Cut-to-Size	884
Drill Thru	905

Part Description:

Lite aluminum composite panels are a light yet durable option. This panel is stable up to 125 degrees Fahrenheit and is weather resistant, making it suitable for indoor and outdoor applications. Lite aluminum composite is an aesthetic panel and available in five colors; it is commonly used in furniture, enclosures, signs and displays.

Black Blue Red Silver Yellow

Part No. (Metric)	Series	Color	Material	Thickness	Stock Sheet Size	Weight
2633 (65-2633)	F M	Blue	Lite Aluminum Composite	.236" (6mm)	48" x 96" + .250/-0 (1219.2mm x 2438.4mm + 6.3/-0)	.625 lb / ft² (1.83 to 3.15kg / m²)
2634 (65-2634)	F M	Red				
2635 (65-2635)	F M	Silver				
2636 (65-2636)	F M	Yellow				
2637 (65-2637)	F M	Black				

Standard Machining Services

Machining Type	Reference Page
Cut-to-Size	884
Drill Thru	905

Twin Wall Polycarbonate Panels

Part Description:

Twin wall polycarbonate panels are a lightweight, weather resistant option, making it ideal for both indoor and outdoor applications. It provides 90 percent light transmission while the twin wall configuration adds durability. Twin wall polycarbonate is commonly used in greenhouses, enclosures, and partitions.

Part No.	Series	Color	Material	Thickness	Stock Sheet Size	Weight
2640	F	Clear	Polycarbonate	.236"	48" + .157/-0 x 96" + .197/-0	.266 lb / ft^2
65-2640	M			6mm	1219.2mm + 4.0/-0 x 2438.4mm + 5.0/-0	1.293 kg / m^2

See page 448 for important ordering information.

Standard Machining Services

Machining Type	Reference Page
Cut-to-Size	884
Drill Thru	905

Part Description:

High density polyethylene (HDPE) panels are a strong, corrosion resistant option that provides durability and resists warping. All options except the natural HDPE have texture on both sides, which masks scratches and marks. HDPE panels are chemical and impact resistant, available in six color options and easily machined. They are a great solution in a wide range of indoor and outdoor environments and commonly used in workspaces, storage and organization units, and enclosures.

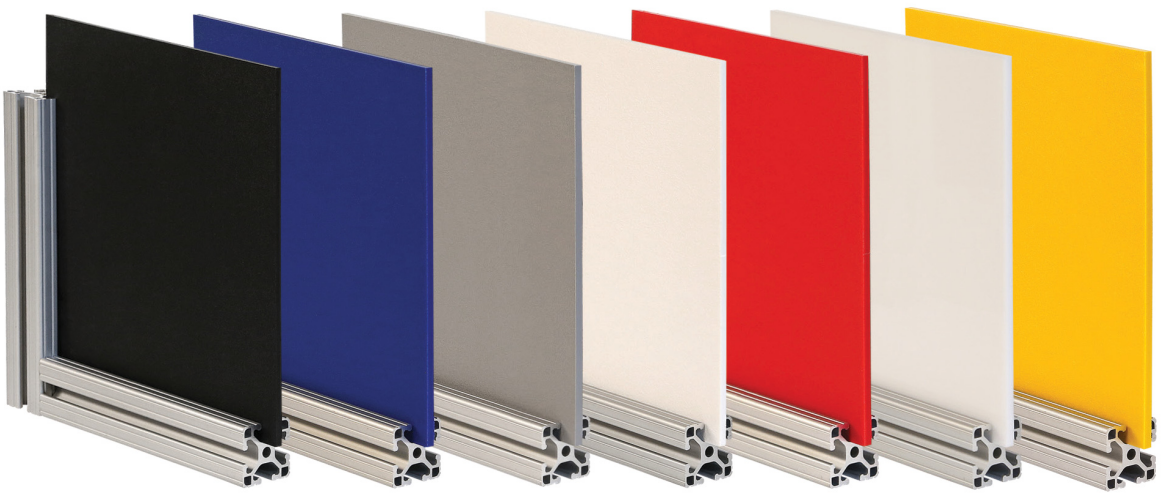

Black Blue Gray White Red Natural Yellow

Part No. (Metric)	Series	Color	Material	Thickness	Stock Sheet Size	Weight
2651 (65-2651)	F M	Black	HDPE	.220 - .236" (6mm)	48" + .250/-0 x 96" + .500/-0 (1219.2mm + 6.3/-0 x 2438.4mm + 12.7/-0)	1.200 lb / ft² (5.86 kg / m²)
2652 (65-2652)	F M	Black		.177" (4.5mm)		.900 lb / ft² (4.46 kg / m²)
2653 (65-2653)	F M	White		.220 - .236" (6mm)		1.200 lb / ft² (5.12 kg / m²)
2654 (65-2654)	F M	White		.177" (4.5mm)		.900 lb / ft² (4.50 kg / m²)
2655 (65-2655)	F M	Gray		.220 - .236" (6mm)		1.200 lb / ft² (5.12 kg / m²)
2656 (65-2656)	F M	Gray		.177" (4.5mm)		.900 lb / ft² (4.31 kg / m²)
2657 (65-2657)	F M	Yellow		.220 - .236" (6mm)		1.200 lb / ft² (5.24 kg / m²)
2658 (65-2658)	F M	Yellow		.177" (4.5mm)		.900 lb / ft² (4.50 kg / m²)
2666 (65-2666)	F M	Blue		.220 - .236" (6mm)		1.200 lb / ft² (5.20 kg / m²)
2667 (65-2667)	F M	Blue		.177" (4.5mm)		.900 lb / ft² (4.27 kg / m²)
2668 (65-2668)	F M	Red		.220 - .236" (6mm)		1.200 lb / ft² (5.17 kg / m²)
2669 (65-2669)	F M	Red		.177" (4.5mm)		.900 lb / ft² (4.36 kg / m²)
2812 (65-2812)	F M	Natural		.375" (9.5mm)		1.824 lb / ft² (9.17 kg / m²)
2813 (65-2813)	F M	Natural		.500" (12mm)		2.416 lb / ft² (11.96 kg / m²)

Standard Machining Services

Machining Type	Reference Page
Cut-to-Size	884
Drill Thru	905

HDPE Pegboard

Part Description:

High density polyethylene (HDPE) pegboard is a strong, corrosion-resistant panel that slides right into profile T-slots. It offers high durability and doesn't warp, making it a great solution for storage and organization in a wide range of environments. Use it in applications at work, in the garage or hobby room, or incorporate it into existing designs to make tools easily accessible. This pegboard is a great way to save space while increasing productivity.

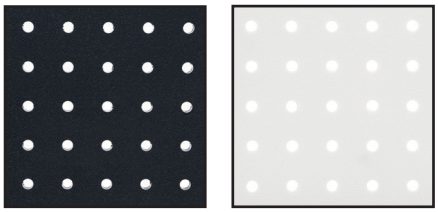

Hole Spacing
1.00" on center

Part No. (Metric)	Series	Color	Material	Thickness	Hole Spacing	Hole Diameter	Stock Sheet Size	Weight
2659 (65-2659)	F M	Black	HDPE	.25" (6mm)	1.00" on center	9/32	48" + .197/-0 x 96" + .394/-0 (1219.2mm + 5.0/-0 x 2438.4mm + 10.0/-0)	1.450 lb / ft² (7.080 kg / m²)
2664 (65-2664)	F M	White						

Standard Machining Services

Machining Type	Reference Page
Cut-to-Size	884

Part Description:

Phenolic Resin panels provide a decorative, durable surface with exceptional impact and scratch resistance. It is a versatile option that can be easily combined with other building materials. Phenolic Resin panels resist moisture and dirt accumulation, making it easy to clean. It is commonly used for interior applications such as work surfaces and table or desk tops in offices and laboratories. **Tip:** Use the tabletop mounting tape on page 826 to mount without machining.

2808 / 65-2808

2814 / 65-2814

2815 / 65-2815

Part No. (Metric)	Series	Color	Material	Finish	Thickness	Stock Sheet Size	Weight
2808 (65-2808)	F M	Black	Phenolic Resin	Black Matte Marble	.750" (19mm)	48" +/- .125" x 96" +/- .156" (1219.2mm +/- 3.175mm x 2438.4 +/- 3.962)	5.600 lb / ft² (27.340 kg / m²)
2814 (65-2814)*	F M			Light Matte Woodgrain	.472" (12mm)	51" +/- .125" x 120" +/- .156" (1295.4mm +/- 3.175mm x 3048.0 +/- 3.962)	3.647 lb / ft² (17.806 kg / m²)
2815 (65-2815)*	F M			Dark Matte Woodgrain	.472" (12mm)		3.647 lb / ft² (17.806 kg / m²)

*See page 448 for important ordering information.

Standard Machining Services

Machining Type	Reference Page
Cut-to-Size	884

Solid Aluminum Plate

Part Description:

Solid aluminum plate is made of 6061-T6 aluminum alloy and comes standard in an unanodized mill finish. It is a strong, durable option and can be easily machined and anodized. It is available in six thicknesses ranging from .060” (1.524mm) to .500” (12.700mm). Solid aluminum plate is commonly used in structural framing, base plates and industrial tabletops.

Part No. (Metric)	Series	Material	Alloy	Thickness	Stock Sheet Size	Weight
2452 (65-2452)	F M	Aluminum	6061-T6	.060” (1.524mm)	48” +/- .125 x 144” +/- .156 (1219.2mm + 3.2/-0 x 3657.6mm + 4.0/-0)	.889 lb / ft² (4.336 kg / m²)
2453 (65-2453)	F M			.125” (3.175mm)		1.764 lb / ft² (8.672 kg / m²)
2454 (65-2454)	F M			.187” (4.750mm)		2.680 lb / ft² (13.008 kg / m²)
2455 (65-2455)	F M			.250” (6.350mm)		3.700 lb / ft² (17.344 kg / m²)
2456 (65-2456)	F M			.375” (9.525mm)		5.550 lb / ft² (27.100 kg / m²)
2457 (65-2457)	F M			.500” (12.700mm)	48.5” +/- .375 x 96.5” +/- .500 (1231.9mm + 9.5/-0 x 2451.1mm + 12.7/-0)	7.400 lb / ft² (36.134 kg / m²)

Standard Machining Services

Machining Type	Reference Page
Cut-to-Size	884

Part Description:

Diamond tread plate is made of 3003-H22 aluminum and is a lightweight, strong material with a raised pattern to improve traction and reduce the risk of sliding or slipping. It is available in thicknesses ranging from .125" (3.175mm) to .250" (6.350mm).The 3003-H22 aluminum provides a shiny surface and is widely used in decorative, cosmetic and architectural applications. Diamond tread plate also lends itself to stairs, ramps, walkways, garages and workshops.

Part No. (Metric)	Series	Color	Material	Finish	Thickness	Stock Sheet Size	Weight
2483 (65-2483)	F M	Bright Aluminum	Aluminum	Polished	.125" (3.175mm)	48" x 96" + .250/-0 (1219.2mm x 2438.4mm + 6.35/-0)	1.88 lb / ft² (9.179 kg / m²)
2484 (65-2484)	F M				.187" (4.750mm)		2.78 lb / ft² (13.573 kg / m²)
2485 (65-2485)	F M				.250" (6.350mm)		3.66 lb / ft² (17.869 kg / m²)

Standard Machining Services

Machining Type	Reference Page
Cut-to-Size	884

Laminated Tabletops

Part Description:

Laminated tabletops have a Wilsonart® laminate surface that provides an aesthetic appearance. The core is made of particle board and it is commonly used for indoor applications such as countertops, workstations, desks, and tables.
Tip: Use the tabletop mounting tape on page 826 to mount without machining.

Part No. (Metric)	Series	Color	Surface Material	Thickness	Stock Sheet Size	Weight
2800 (65-2800)	F M	Gray	Wilsonart® laminate D92-60	1.25" (31.75mm)	30" x 48" (762.00mm x 1219.20mm)	50.00 lb (22.680 kg) / Stock Sheet
2802 (65-2802)	F M				30" x 60" (762.00mm x 1524.00mm)	63.00 lb (28.577 kg) / Stock Sheet
2804 (65-2804)	F M				30" x 72" (762.00mm x 1828.80mm)	75.00 lb (34.020 kg) / Stock Sheet
2806 (65-2806)	F M				36" x 72" (914.40mm x 1828.80mm)	90.00 lb (40.824 kg) / Stock Sheet

Standard Machining Services

Machining Type	Reference Page
Cut-to-Length	884

Part Description:

Expanded metal panels are a strong and versatile option that are impact resistant and available in a black or yellow powder coat or galvanized carbon steel finish. Expanded metal has diamond-shape openings that provide visibility and ventilation. It is easy to machine and commonly used in heavy-duty guarding applications.

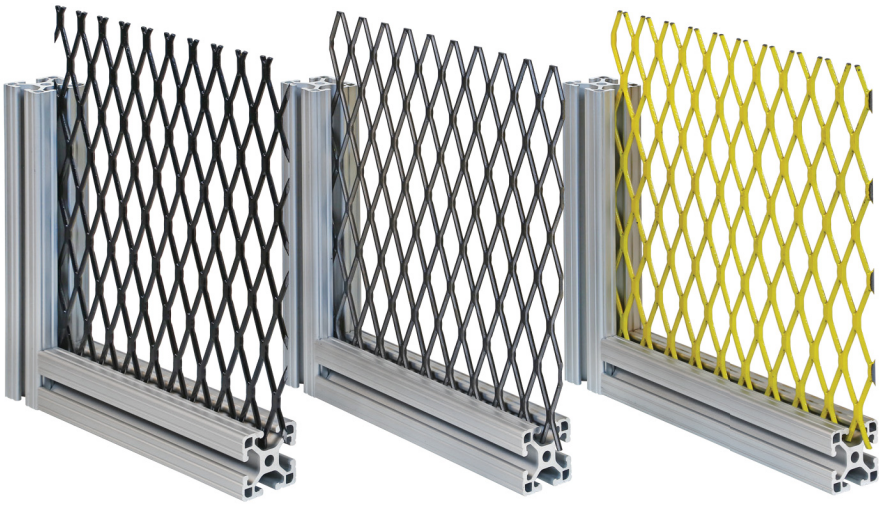

Powder Coated Black | Carbon Steel | Powder Coated Yellow

Part No. (Metric)	Series	Material	Type	Thickness	Diamond Dimensions	Stock Sheet Size	Weight
2480 (65-2480)	F M	Carbon Steel	Flattened	.135" (3.43mm)	2" x .9" (50.4mm x 22.8mm)	48" x 96" + .250/-0 (1219.2mm x 2438.4mm + 6.35/-0)	1.422 lb / ft² (6.940 kg / m²)
2481 (65-2481)	F M	Powder Coated Black		.140" (3.43mm)			1.408 lb / ft² (6.870 kg / m²)
2482 (65-2482)	F M	Powder Coated Yellow		.140" (3.43mm)			1.376 lb / ft² (6.720 kg / m²)

See page 448 for important ordering information.

Standard Machining Services

Machining Type	Reference Page
Shear-to-Size	884

Wire Mesh Panels

Part Description:

Wire mesh panels are a cost-effective option that is lightweight yet impact resistant. Wire mesh has square-shaped openings that provide visibility and ventilation. It is available in a range of gauges, thicknesses, and colors and commonly used in guarding applications and enclosures.

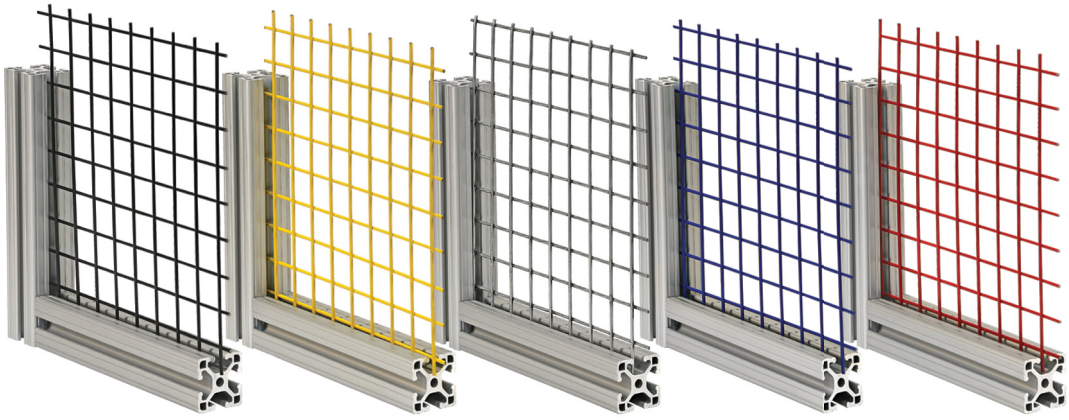

Black Yellow Galvanized Blue Red

Part No. (Metric)	Series	Material	Gauge	Thickness	Square Dimensions	Stock Sheet Size	Weight
2470 (65-2470)	F M	Galvanized Steel	12	.200" (5.10mm)	1" x 1" (25.40mm x 25.40mm)	48" x 96" +/- .50" (1219.2mm x 2438.4mm)	.618 lb / ft² (3.017 kg / m²)
2460 (65-2460)	F M	Galvanized Steel	16	.137" (3.50mm)	.50" x .50" (12.70mm x 12.70mm)		.510 lb / ft² (2.490 kg / m²)
2468 (65-2468)	F M	Powder Coated Blue	12	.200" (5.10mm)	1" x 1" (25.40mm x 25.40mm)		1.010 lb / ft² (4.931 kg / m²)
2463 (65-2463)	F M	Powder Coated Blue	16	.137" (3.50mm)	.50" x .50" (12.70mm x 12.70mm)		.580 lb / ft² (2.832 kg / m²)
2467 (65-2467)	F M	Powder Coated Red	12	.200" (5.10mm)	1" x 1" (25.40mm x 25.40mm)		1.010 lb / ft² (4.931 kg / m²)
2462 (65-2462)	F M	Powder Coated Red	16	.137" (3.50mm)	.50" x .50" (12.70mm x 12.70mm)		.580 lb / ft² (2.832 kg / m²)
2471 (65-2471)	F M	Powder Coated Yellow	12	.200" (5.10mm)	1" x 1" (25.40mm x 25.40mm)		1.010 lb / ft² (4.931 kg / m²)
2461 (65-2461)	F M	Powder Coated Yellow	16	.137" (3.50mm)	.50" x .50" (12.70mm x 12.70mm)		.580 lb / ft² (2.832 kg / m²)
2479 (65-2479)	F M	Powder Coated Black	12	.200" (5.10mm)	1" x 1" (25.40mm x 25.40mm)		1.010 lb / ft² (4.931 kg / m²)
2464 (65-2464)	F M	Powder Coated Black	16	.137" (3.50mm)	.50" x .50" (12.70mm x 12.70mm)		.580 lb / ft² (2.832 kg / m²)

Standard Machining Services

Machining Type	Reference Page
Shear-to-Size	884

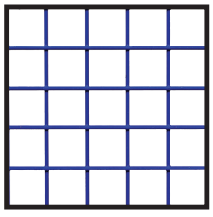

12 Gauge
1" x 1" (25.40mm x 25.40mm)

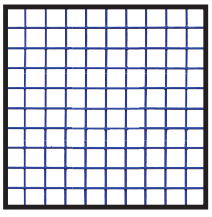

16 Gauge
.50" x .50" (12.70mm x 12.70mm)

Part Description:

Thermoplastic coated wire mesh panels are a cost-effective option that is lightweight yet strong. It has square-shaped openings that provide visibility and ventilation. It has a thermoplastic coat that creates a clean look and helps prevent cuts and other injuries. This panel is available in a range of gauges, thicknesses, and colors and commonly used in guarding applications and enclosures.

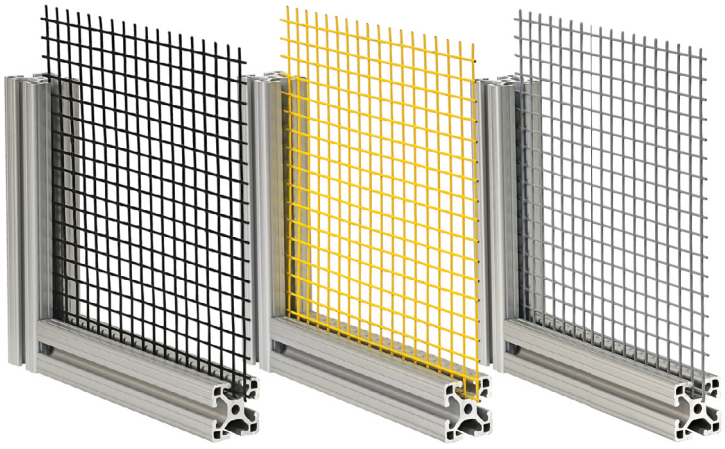

Black Yellow Gray

Part No. (Metric)	Series	Material	Gauge	Thickness	Square Dimensions	Stock Sheet Size	Weight
2472 (65-2472)	F M	Thermoplastic Black	12	.210" (5.30mm)	1" x 1" (25.40mm x 25.40mm)	48" x 96" +/- .50" (1219.2mm x 2438.4mm)	.663 lb / ft² (3.237 kg / m²)
2474 (65-2474)	F M	Thermoplastic Black	16	.140" (3.55mm)	.50" x .50" (12.70mm x 12.70mm)		.650 lb / ft² (3.173 kg / m²)
2478 (65-2478)	F M	Thermoplastic Black	12	.210" (5.30mm)	2" x 2" (50.80mm x 50.80mm)		.663 lb / ft² (3.237 kg / m²)
2473 (65-2473)	F M	Thermoplastic Yellow	12	.210" (5.30mm)	1" x 1" (25.40mm x 25.40mm)		.663 lb / ft² (3.237 kg / m²)
2475 (65-2475)	F M	Thermoplastic Yellow	16	.140" (3.55mm)	.50" x .50" (12.70mm x 12.70mm)		.650 lb / ft² (3.173 kg / m²)
2477 (65-2477)	F M	Thermoplastic Gray	12	.210" (5.30mm)	1" x 1" (25.40mm x 25.40mm)		.663 lb / ft² (3.237 kg / m²)
2476 (65-2476)	F M	Thermoplastic Gray	16	.140" (3.55mm)	.50" x .50" (12.70mm x 12.70mm)		.650 lb / ft² (3.173 kg / m²)

Standard Machining Services

Machining Type	Reference Page
Shear-to-Size	884

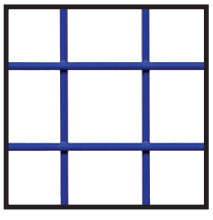

12 Gauge
2" x 2" (50.80mm x 50.80mm)

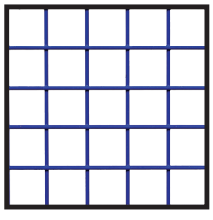

12 Gauge
1" x 1" (25.40mm x 25.40mm)

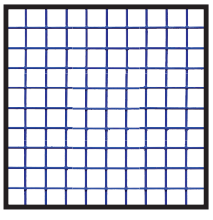

16 Gauge
.50" x .50" (12.70mm x 12.70mm)

80/20® Inc.

Xtreme® DIY

Do-It-Yourself Solutions

80/20's Xtreme® DIY series is a compilation of projects that businesses or the home-hobbyist can customize and alter to fit specific needs and requirements. These are designed to get your creativity flowing as well as highlight the diverse and unique ways 80/20 aluminum T-slot profiles and parts provide solutions.

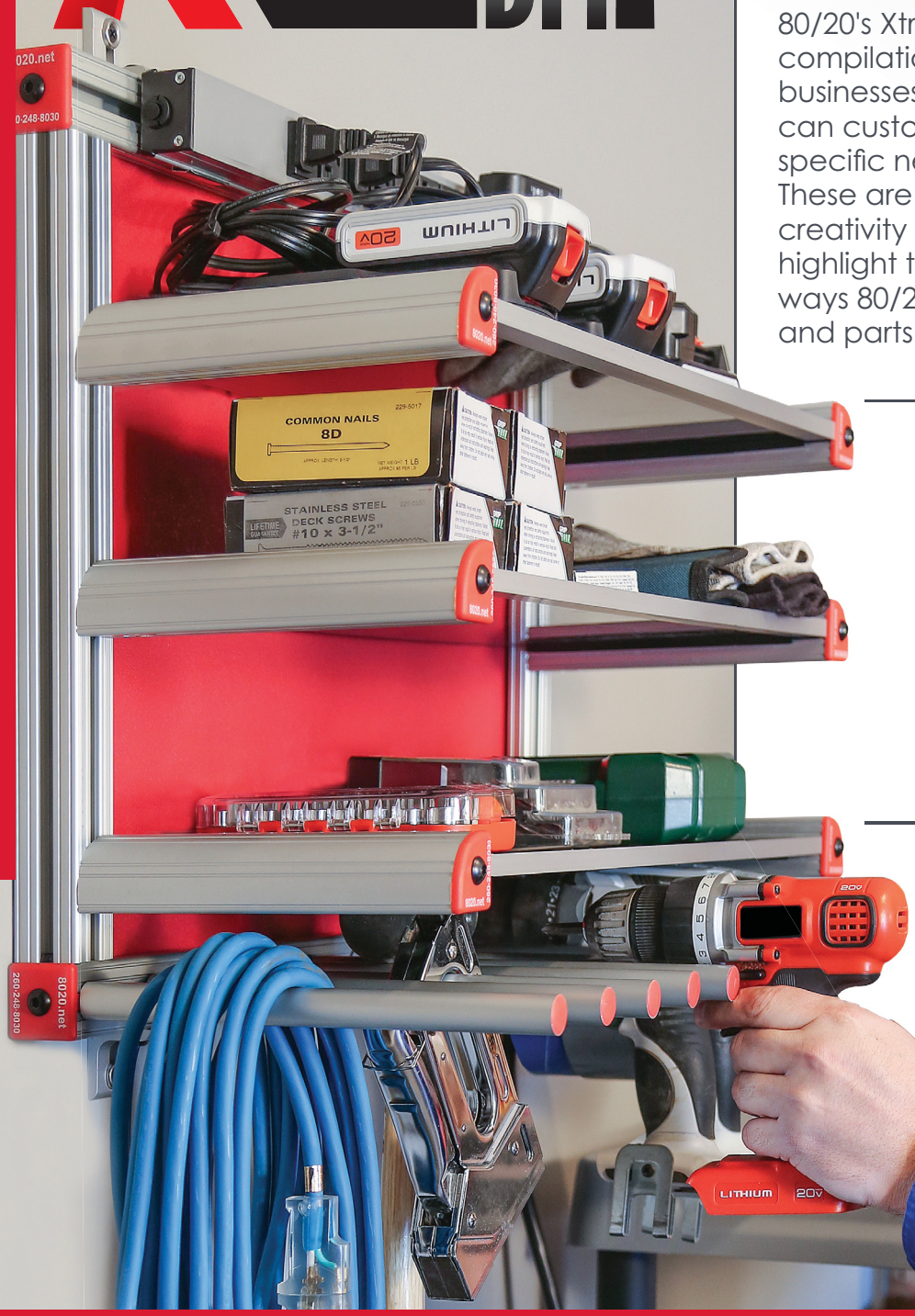

Xtreme Ideas

- Garage
- Home & Office
- Industrial
- Outdoor
- Entertainment
- Gift Ideas

Visit our YouTube channel to view all the Xtreme DIY solutions.

YouTube™ Subscribe

Browse Builds and Download Design files at 8020.net/xdiy

Part Description:

The detent hinge stopper is typically used with a detent hinge to prevent over-rotation when a door panel is in a closed position.

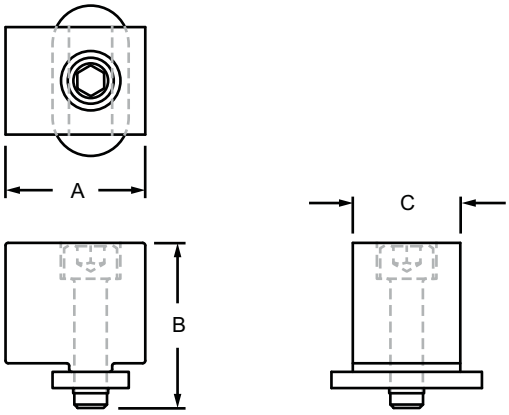

Part No.	Series	Material	Alloy*	Finish	A	B	C	Weight
2054	10 15	Aluminum	6105-T5	Clear Anodize	.812"	.960"	.625"	.047 lb
2054-Black	10 15			Black Anodize	.812"	.960"	.625"	.047 lb
65-2054	25 40			Clear Anodize	20.32mm	25.59mm	15.88mm	.0213 kg
65-2054-Black	25 40			Black Anodize	20.32mm	25.59mm	15.88mm	.0213 kg

* Or comparable

Included Hardware (Mount to T-slot)

Part No.	Series	Qty.	Bolt
3056	10 15	1	10-32 x 3/4" SHCS
3276	10 15	1	Slide-in Economy T-Nut
13-5520	25 40	1	M5 x 4/5" SHCS
25-1951	25 40	1	Slide-in Economy T-Nut

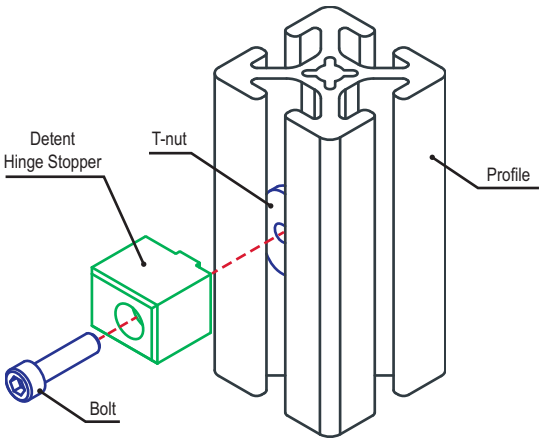

Aluminum Panel Mount Block

Part Description:

The aluminum panel mount block can be used to mount a panel flush with a profile edge or on the profile surface. There is a slot tab on the block that acts to align the mount in the T-slot. The aluminum panel mount block increases stability of the mounted panel while also reducing vibration. It is easy to use and simplifies the process of adding or removing plastic panels. The hardware to mount the block to the T-slot is included while the hardware to mount the panel to the block should be based on the panel type and thickness.

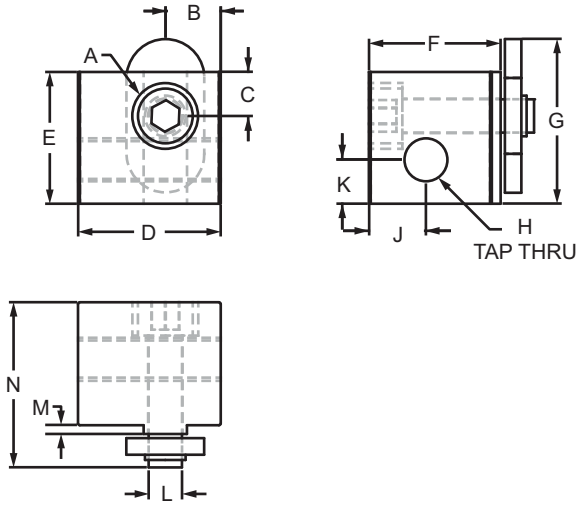

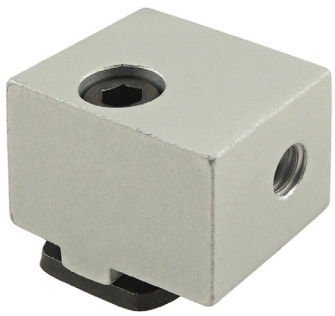

Part No.	Series	A	B	C	D	E	F	G	H	J	K	L	M	N	Weight
2427	10	.375" c-bore .190" deep with .196" thru hole	.316"	.250"	.812"	.750"	.750"	.938"	1/4-20	.325"	.250"	.247"	.050"	.940"	.051 lb
2427-Black	10	.375" c-bore .190" deep with .196" thru hole	.316"	.250"	.812"	.750"	.750"	.938"	1/4-20	.325"	.250"	.247"	.050"	.940"	.051 lb
2910	10	.345" c-bore, .190" deep with .196" thru hole	.225"	.312"	.750"	.812"	.750"	.312"	1/4-20	.325"	.250"	.240"	.050"	.960"	.048 lb
2910-Black	10	.345" c-bore, .190" deep with .196" thru hole	.225"	.312"	.750"	.812"	.750"	.312"	1/4-20	.325"	.250"	.240"	.050"	.960"	.048 lb
2425	15	.438" c-bore .250" deep with .257" thru hole	.495"	.263"	1.250"	1.000"	1.000"	1.393"	5/16-18	.443"	.390"	.310"	.125"	1.250"	.121 lb
2425-Black	15	.438" c-bore .250" deep with .257" thru hole	.495"	.263"	1.250"	1.000"	1.000"	1.393"	5/16-18	.443"	.390"	.310"	.125"	1.250"	.121 lb
2900	15	.406" c-bore, .310" deep with .257" thru hole	.263"	.495"	1.000"	1.250"	1.000"	1.143"	5/16-18	.437"	.392"	.309"	.125"	1.310"	.121 lb
2900-Black	15	.406" c-bore, .310" deep with .257" thru hole	.263"	.495"	1.000"	1.250"	1.000"	1.143"	5/16-18	.437"	.392"	.309"	.125"	1.310"	.121 lb
25-2427	25	9.75mm c-bore 5.60mm deep with 5.60mm thru hole	7.85mm	12.70mm	20.30mm	19.00mm	20.30mm	19.00mm	M6 x 1.0	9.00mm	6.50mm	6.30mm	1.30mm	25.60mm	.0231 kg
25-2427-Black	25	9.75mm c-bore 5.60mm deep with 5.60mm thru hole	7.85mm	12.70mm	20.30mm	19.00mm	20.30mm	19.00mm	M6 x 1.0	9.00mm	6.50mm	6.30mm	1.30mm	25.60mm	.0231 kg
40-2425	40	11.25mm c-bore 6.10mm deep with 6.30mm thru hole	14.15mm	7.13mm	34.30mm	26.00mm	26.30mm	33.16mm	M8 x 1.25	11.60mm	10.00mm	7.87mm	3.10mm	31.16mm	.0644 kg
40-2425-Black	40	11.25mm c-bore 6.10mm deep with 6.30mm thru hole	14.15mm	7.13mm	34.30mm	26.00mm	26.30mm	33.16mm	M8 x 1.25	11.60mm	10.00mm	7.87mm	3.10mm	31.16mm	.0644 kg

CONTINUE

Aluminum Panel Mount Block (Continued)

Material Specifications

Part No.	Material	Alloy*	Finish
2427	Aluminum	6105-T5	Clear Anodize
2427-Black			Black Anodize
2910			Clear Anodize
2910-Black			Black Anodize
2425			Clear Anodize
2425-Black			Black Anodize
2900			Clear Anodize
2900-Black			Black Anodize
25-2427			Clear Anodize
25-2427-Black			Black Anodize
40-2425			Clear Anodize
40-2425-Black			Black Anodize

* Or comparable

Required Machining Services

Machining Type	Machined	Reference Page
Panel Mount Block Milling	Mounting Panel	901

Included Hardware (Mount to T-Slot)

Block	Series	Part No.	Qty.	Bolt	Part No.	Qty.	T-Nut
2427	10	3056	1	10-32 x 3/4 SHCS	3276	1	Economy
2910	10	3685*	1	10-32 x 3/4 SHCS	3676*	1	Economy
2425	15	3071	1	1/4-20 x 1.0 SHCS	3286	1	Economy
2900	15	3671*	1	1/4-20 x 1.0 SHCS	3686*	1	Economy
25-2427	25	13-5520	1	M5 x 20mm SHCS	25-1951	1	Economy
40-2425	40	13-6525	1	M6 x 25mm SHCS	3836	1	Economy

*Stainless steel (SS) hardware

Suggested Hardware (Mount to Panel)

Part No.	Series	Qty.	Bolt
3063	10	1	1/4-20 x 5/8 BHSCS
3065	10	1	1/4-20 x 3/4" BHSCS
3114	15	1	5/16-18 x 3/4 BHSCS
3117	15	1	5/16-18 x 7/8" BHSCS
13-6316	25	1	M6 x 16mm BHSCS
13-8316	40	1	M8 x 16mm BHSCS

- 3063 - mounts 1/4" panels to the surface of 10 Series profiles and mounts 3/16" panels flush.
- 3065 - mounts 1/2" panels to the surface of 10 Series profiles.
- 3114 - mounts 1/4" panels to the surface of, or flush with, 15 series profiles.
- 3117 - mounts 1/2" panels to the surface of 15 Series profiles.
- 25-2427 - mounts 4.5mm panels flush with 25 Series profiles.
- 40-2425 - mounts 6mm panels flush with 40 Series profiles.

Panel Covers Profile Surface **Panel Flush with Profile Edge**

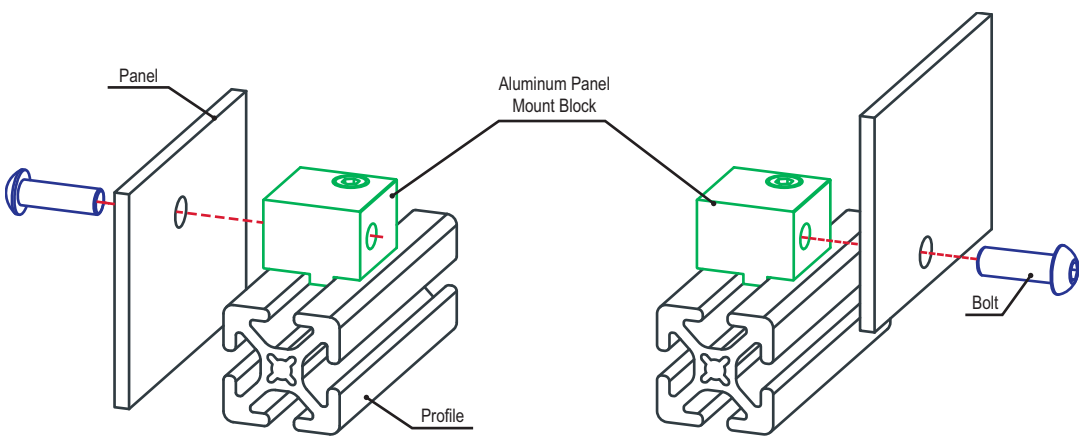

Lite Panel Mount Block

Part Description:

The lite panel mount block is made of nylon and can be used to mount a panel flush with a profile edge or on the profile surface. The lite panel mount block is a cost-effective option that increases stability of the mounted panel while also reducing vibration. The lite panel mount block is easy to use and simplifies the process of adding or removing plastic panels. The suggested bolt assembly to mount the block to the T-slot can be found below. The hardware to mount the panel to the block should be based on the panel type and thickness.

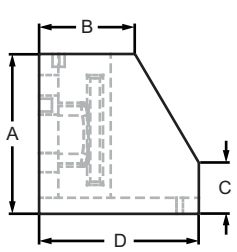

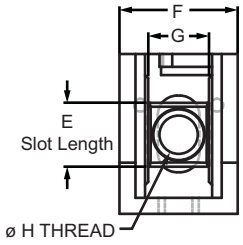

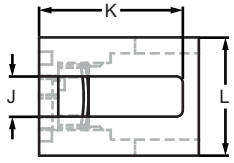

Part No.	Series	A	B	C	D	E	F	G	H	J	K	L	Weight
12050	15 30 40 45	25.00mm	15.00mm	8.00mm	25.00mm	10.00mm	18.50mm	9.50mm	M6 x 1.0	6.30mm	22.50mm	18.50mm	.0037 kg
14192	15 30 40 45	25.00mm	15.00mm	8.00mm	25.00mm	10.00mm	18.50mm	9.50mm	1/4-20	6.30mm	22.50mm	18.50mm	.0086 kg

Material Specifications

Material	Color	Process
Nylon	Black	Injection Molding

Required Machining Services

Machining Type	Machined	Reference Page
Panel Mount Block Milling	Mounting Panel	901

Suggested Hardware (Mount to T-Slot)

Part No.	Series	Qty.	Bolt	T-Nut
3408	15	1	1/4-20 x 1/2 BHSCS	Drop-in
75-3599	30	1	M6 x 10mm BHSCS	Drop-in
75-3600	40	1	M6 x 12mm BHSCS	Drop-in
75-3602	45	1	M6 x 14mm BHSCS	Drop-in

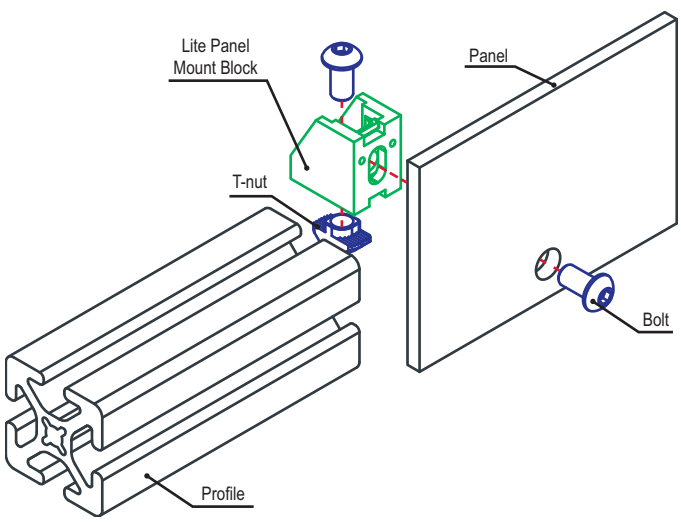

Drop-In Lite Panel Mount Block

Part Description:

The drop-in lite panel mount block is made of nylon and can be used to mount a panel flush with a profile edge or on the profile surface. It has a molded extension that acts as a T-slot stud and drops into the profile, perfect for instances where profile ends are captivated. The block is a cost-effective option that increases stability of the mounted panel while also reducing vibration. The drop-in lite panel mount block is easy to use and simplifies the process of adding or removing plastic panels.

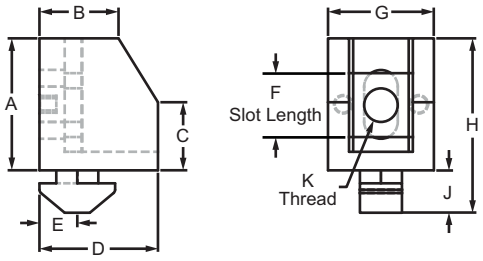

Part No.	Series	A	B	C	D	E	F	G	H	J	K	L	M	N	Weight
14139	15 40	25.00mm	13.00mm	9.00mm	25.00mm	8.50mm	12.50mm	18.50mm	34.00mm	9.00mm	M6 x 1.0	6.00mm	17.00mm	18.50mm	.0100 kg
14186	15 40	25.00mm	13.00mm	9.00mm	25.00mm	8.50mm	12.50mm	18.50mm	34.00mm	9.00mm	1/4-20	6.00mm	17.00mm	18.50mm	.0998 kg
14142	15 40	25.00mm	13.00mm	9.00mm	25.00mm	12.50mm	12.50mm	18.50mm	34.00mm	9.00mm	M6 x 1.0	6.00mm	17.00mm	18.50mm	.0181 kg
14143	15 40	25.00mm	13.00mm	9.00mm	25.00mm	14.50mm	12.50mm	18.50mm	34.00mm	9.00mm	M6 x 1.0	6.00mm	17.00mm	18.50mm	.0100 kg
14167	15 40	25.00mm	13.00mm	9.00mm	25.00mm	12.50mm	12.50mm	18.50mm	34.00mm	9.00mm	1/4-20	6.00mm	17.00mm	18.50mm	.0100 kg
14191	15 40	25.00mm	13.00mm	9.00mm	25.00mm	14.50mm	15.60mm	18.50mm	34.00mm	9.00mm	1/4-20	6.00mm	17.00mm	18.50mm	.0100 kg
14148	20	15.70mm	9.40mm	8.10mm	14.10mm	4.50mm	7.60mm	12.60mm	20.75mm	5.05mm	M4 x 0.6	5.00mm	9.00mm	12.60mm	.0027 kg
14138	30	25.00mm	16.00mm	—	18.50mm	7.00mm	10.50mm	18.50mm	31.20mm	6.20mm	M6 x 1.0	8.00mm	14.00mm	18.50mm	.0086 kg
14185	30	25.00mm	16.00mm	—	18.50mm	7.00mm	10.50mm	18.50mm	31.20mm	6.20mm	1/4-20	8.00mm	14.00mm	18.50mm	.0039 kg
14140	45	25.00mm	13.00mm	9.00mm	25.00mm	9.50mm	12.50mm	18.50mm	35.30mm	10.30mm	M6 x 1.0	9.00mm	15.50mm	18.50mm	.0106 kg
14188	45	25.00mm	13.00mm	9.00mm	25.00mm	9.50mm	12.50mm	18.50mm	35.30mm	10.30mm	1/4-20	9.00mm	15.50mm	18.50mm	.0104 kg
14189	45	25.00mm	13.00mm	9.00mm	25.00mm	14.00mm	12.50mm	18.50mm	35.30mm	10.30mm	M6 x 1.0	9.00mm	15.50mm	18.50mm	.0109 kg
14190	45	25.00mm	13.00mm	9.00mm	25.00mm	14.00mm	12.50mm	18.50mm	35.30mm	10.30mm	1/4-20	9.00mm	15.50mm	18.50mm	.0104 kg

Material Specifications

Material	Color	Process
Nylon	Black	Injection Molding

Required Machining Services

Machining Type	Machined	Reference Page
Panel Mount Block Milling	Mounting Panel	901

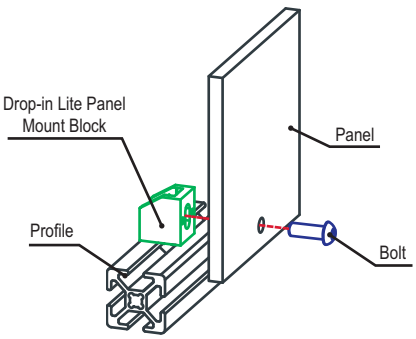

Adjustable Panel Mount Block

Part Description:

The adjustable panel mount block is made of die-cast zinc and can be used to mount a panel flush with a profile edge or the profile surface. It is a strong, heavy-duty option that increases stability of the mounted panel while also reducing vibration. It's easy to use and simplifies the process of adding or removing plastic or aluminum panels. The block provides three options to mount the panel and is slotted to accommodate a variety of panel thicknesses as well as help with aligning the block to the profile. There is an option available with an adjustable anti-rotation clip. The suggested hardware can be found below.

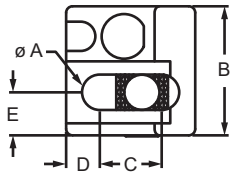

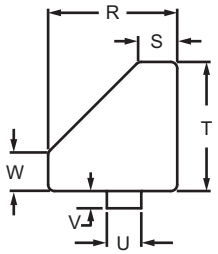

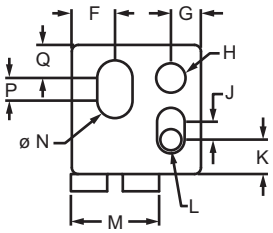

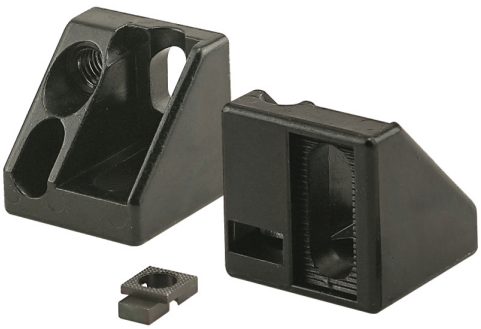

Part No.	Series	A	B	C	D	E	F	G	H	J	K	L
12057	15 40	8.20mm	30.00mm	14.40mm	7.80mm	10.00mm	10.00mm	7.00mm	M8 x 1.25	4.20mm	8.00mm	M6 x 1.0
12058*	15 40	8.20mm	30.00mm	14.40mm	7.80mm	10.00mm	10.00mm	7.00mm	M8 x 1.25	4.20mm	8.00mm	M6 x 1.0

Part No.	Series	M	N	P	Q	R	S	T	U	V	W	Weight
12057	15 40	—	8.20mm	5.20mm	7.70mm	30.00mm	9.00mm	30.00mm	—	—	9.00mm	.0653 kg
12058*	15 40	20.50mm	8.20mm	5.20mm	7.70mm	30.00mm	9.00mm	30.00mm	8.00mm	4.00mm	9.00mm	.0694 kg

* This block comes with an adjustable anti-rotation clip.

Material Specifications

Material	Finish	Process
Zinc	Smooth Black	Die Cast

Required Machining Services

Machining Type	Machined	Reference Page
Drill Thru	Mounting Panel	905

Suggested Hardware (Mount to T-Slot)

Part No.	Series	Qty.	Bolt	T-Nut
75-3627	15 40	1	M8 x 18mm SHCS	Slide-in

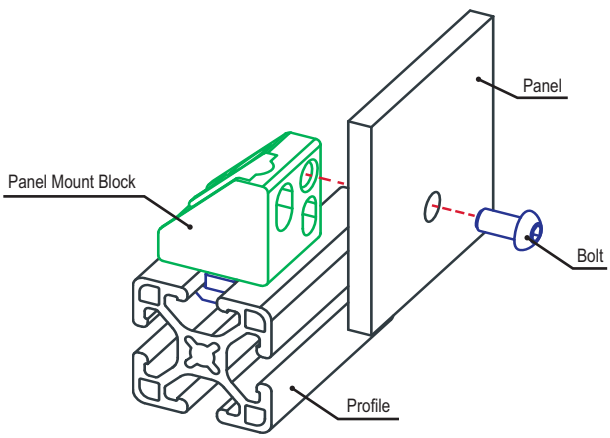

Part Description:

The lite panel mount block spacer works with either the lite or drop-in lite panel mount block to increase its thickness and allow for offset panel mounting. It also reduces vibration and movement.

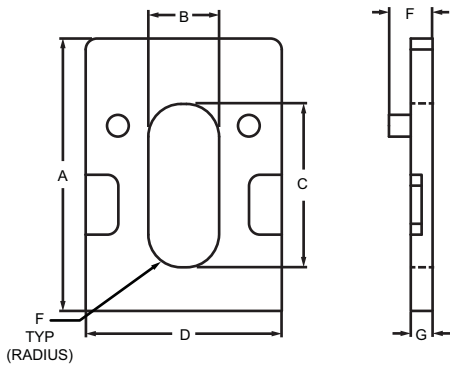

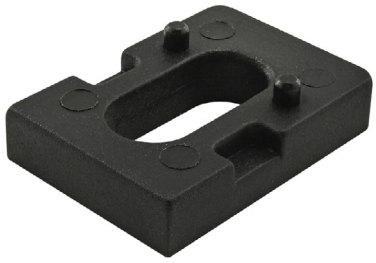

Part No.	Series	Material	Color	Process	A	B	C	D	E	F	G	Weight
12051	15 30 40 45	Nylon	Black	Injection Molding	25.00mm	6.50mm	15.00mm	18.00mm	3.00mm	4.00mm	2.00mm	.0009 kg
12053	15 30 40 45				25.00mm	6.50mm	15.00mm	18.00mm	3.00mm	5.00mm	3.00mm	.0012 kg
12055	15 30 40 45				25.00mm	6.50mm	15.00mm	18.00mm	3.00mm	7.00mm	5.00mm	.0023 kg

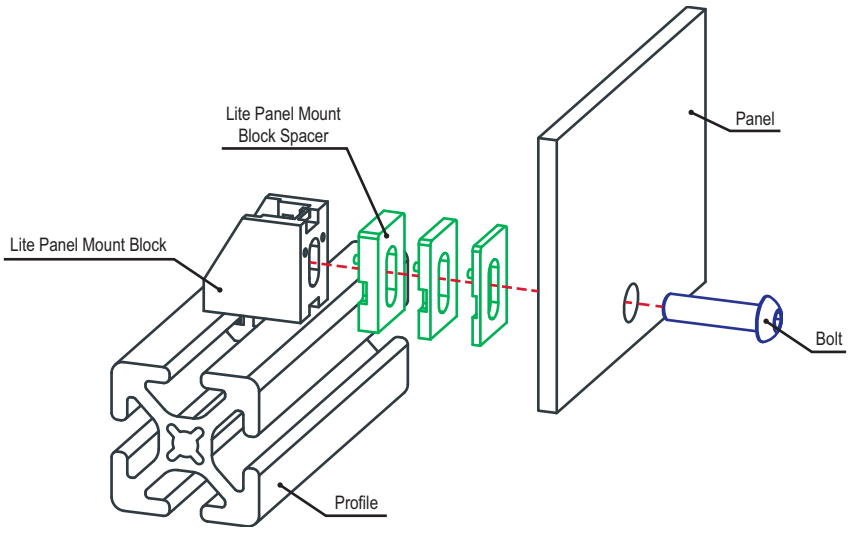

Quick Change Panel Clamp

Part Description:

The quick change panel clamp is made of nylon and consists of a block and clip. It requires no machining or hardware and can be used to mount a panel flush with a profile edge. The quick change panel clamp has a molded extension that acts as a T-slot stud and drops into the profile, perfect for instances where profiles are captivated. The clip secures the panel to the block while the block increases stability of the mounted panel and reduces vibration. The quick change panel clamp clip can be removed with a flat tip screwdriver which simplifies the process of adding or removing plastic panels.

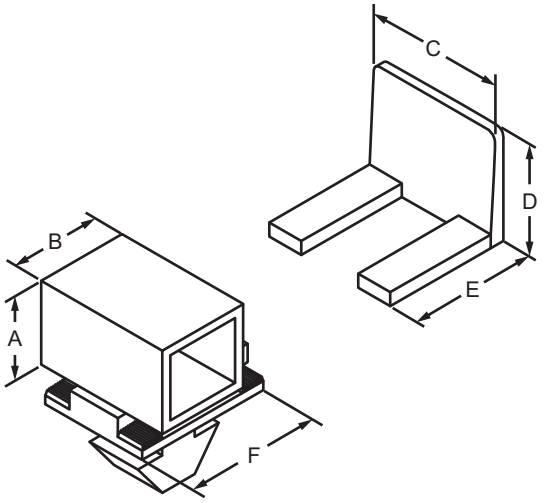

Part No.	Series	Type	Material	Color	A	B	C	D	E	F	Weight
2421	15	Block & Clip	Nylon	Black	.775"	.640"	.980"	.785"	.870"	.920"	.018 lb
2422	15	Block			.775"	.640"	—	—	—	.920"	.014 lb
2423	15	Clip			—	—	.980"	.785"	.870"	—	.004 lb
40-2421	40	Block & Clip			19.70mm	16.30mm	24.90mm	19.90mm	22.10mm	23.30mm	.0064 kg
40-2422	40	Block			19.70mm	16.30mm	—	—	—	23.30mm	.0062 kg
40-2423	40	Clip			—	—	24.90mm	19.90mm	22.10mm	—	.0019 kg

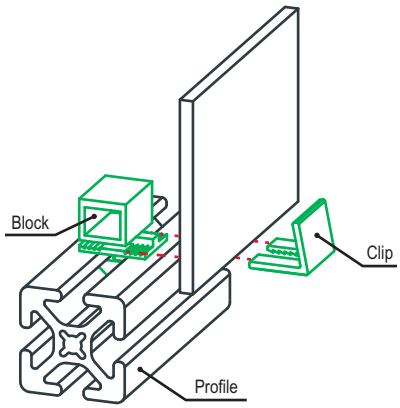

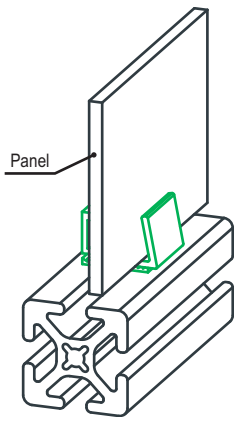

Part Description:

The panel mount bracket is used to surface mount a panel to a profile and has a slotted hole which allows for greater adjustability when mounting the panel. It engages the 2-degree drop-lock feature when the assembly bolts are tightened to the required torque. The panel mount bracket is a fastening method that can be repositioned and reused. The panel requires a through hole (page 905) as well as hardware to mount the panel to the bracket, which should be based on the panel type and thickness. The suggested hardware for mounting the bracket to the T-slot can be found below.

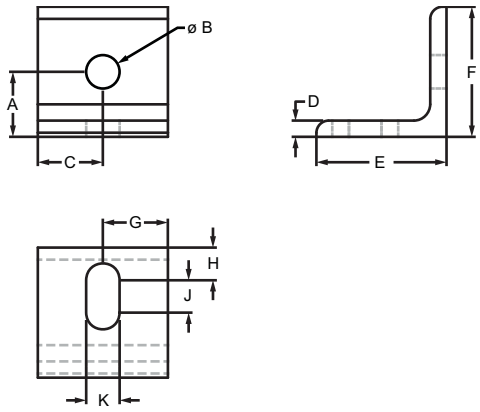

Part No.	Series	Color	A	B	C	D	E	F	G	H	J	K	Weight
2428	10	Clear	.500"	.257"	.500"	.125"	1.000"	1.000"	.500"	.250"	.250"	.257"	.018 lb
2428-Black	10	Black	.500"	.257"	.500"	.125"	1.000"	1.000"	.500"	.250"	.250"	.257"	.018 lb
2430	15	Clear	.500"	.328"	.500"	.125"	1.000"	1.000"	.500"	.281"	.250"	.328"	.019 lb
2430-Black	15	Black	.500"	.328"	.500"	.125"	1.000"	1.000"	.500"	.281"	.250"	.328"	.019 lb
25-2428	25	Clear	12.50mm	6.30mm	12.50mm	3.00mm	25.00mm	25.00mm	12.50mm	6.00mm	6.50mm	6.30mm	.0088 kg
25-2428-Black	25	Black	12.50mm	6.30mm	12.50mm	3.00mm	25.00mm	25.00mm	12.50mm	6.00mm	6.50mm	6.30mm	.0088 kg
40-2430	40	Clear	12.50mm	8.30mm	12.50mm	3.00mm	25.00mm	25.00mm	12.50mm	6.88mm	6.05mm	8.28mm	.0077 kg
40-2430-Black	40	Black	12.50mm	8.30mm	12.50mm	3.00mm	25.00mm	25.00mm	12.50mm	6.88mm	6.05mm	8.28mm	.0077 kg

Material Specifications

Material	Alloy*	Finish
Aluminum	6105-T5	Anodize

* Or comparable

Required Machining Services

Machining Type	Machined	Reference Page
Drill Thru	Mounting Panel	905

Suggested Hardware (Mount to T-Slot)

Part No.	Series	Qty.	Bolt	T-Nut
3386	10	1	1/4-20 x 3/8 FBHSCS	Economy
3319	15	1	5/16-18 x 1/2 FBHSCS	Economy
75-3404	25	1	M6 x 10mm BHSCS	Economy
75-3421	40	1	M8 x 12mm BHSCS	Economy

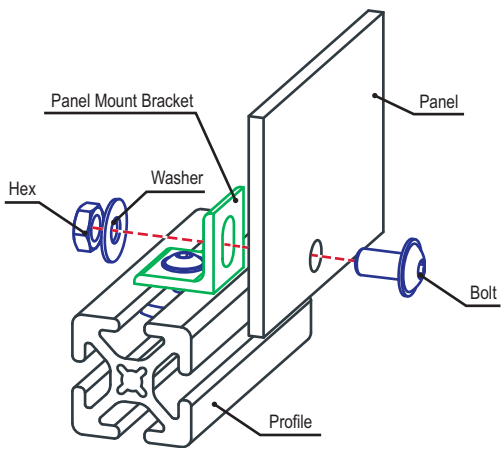

Roll-In Panel Mount Bracket

Part Description:

The roll-in panel mount bracket is used to mount a panel flush with a profile and is designed to allow use even when profiles are captivated. The roll-in panel mount bracket is a fastening method that can be repositioned and reused. To simplify the assembly use either a drill through or a drill through and a tap (page 905). The hardware should be based on machining type and panel thickness.

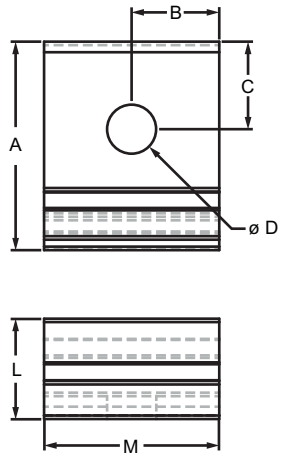

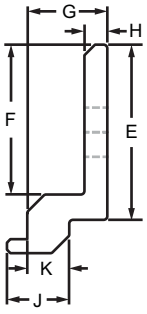

Part No.	Series	Color	A	B	C	D	E	F	G	H	J	K	L	M	Weight
2489	10	Clear	1.190"	.500"	.500"	.281"	1.000"	.855"	.457"	.130"	.356"	.240"	.573"	1.000"	.020 lb
2489-Black	10	Black	1.190"	.500"	.500"	.281"	1.000"	.855"	.457"	.130"	.356"	.240"	.573"	1.000"	.020 lb
2488	15	Clear	1.805"	.750"	.745"	.328"	1.500"	1.305"	.610"	.130"	.476"	.304"	.782"	1.500"	.053 lb
2488-Black	15	Black	1.805"	.750"	.745"	.328"	1.500"	1.305"	.610"	.130"	.476"	.304"	.782"	1.500"	.053 lb
25-2489	25	Clear	30.23mm	12.70mm	12.70mm	7.10mm	25.40mm	21.72mm	11.61mm	3.30mm	9.04mm	6.10mm	14.55mm	25.40mm	.0095 kg
25-2489-Black	25	Black	30.23mm	12.70mm	12.70mm	7.10mm	25.40mm	21.72mm	11.61mm	3.30mm	9.04mm	6.10mm	14.55mm	25.40mm	.0095 kg
40-2488	40	Clear	45.86mm	19.05mm	18.93mm	8.30mm	38.10mm	33.16mm	15.49mm	3.30mm	12.09mm	7.72mm	19.86mm	38.10mm	.0240 kg
40-2488-Black	40	Black	45.86mm	19.05mm	18.93mm	8.30mm	38.10mm	33.16mm	15.49mm	3.30mm	12.09mm	7.72mm	19.86mm	38.10mm	.0240 kg

Material Specifications

Material	Alloy*	Finish
Aluminum	6105-T5	Anodize

* Or comparable

Required Machining Services

Machining Type	Machined	Reference Page
Drill Thru	Mounting Panel	905

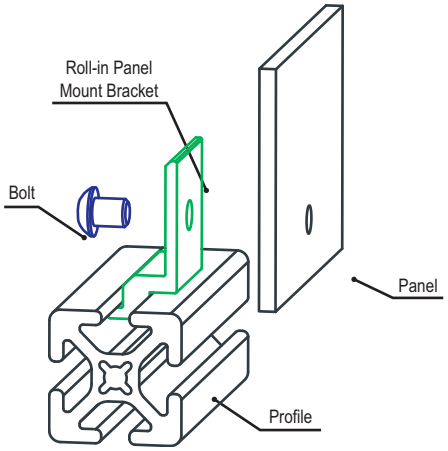

Part Description:

The tabletop fastening kit is typically used to help secure a tabletop to a frame. The kit includes all required hardware to mount the top to the frame; see chart below for additional details.

2810

2811

Part No.	Series	Bracket	Bolt	Nut	Washer	Screw	Weight
2810	15	Slotted Inside Corner Bracket	5/16-18 x 11/16 FBHSCS	5/16-18 Roll-In T-Nut	5/16 Bright Zinc Washer	#14 x 1.25 Phillips Pan Head Sheet Metal Screw	.139 lb
2810-Black							
65-2810	40		M8 x 16mm BHSCS	M8 Roll-In T-Nut	M8 Bright Zinc Washer		.144 lb
2811	RT		5/16-18 x 2.0 BHSCS	5/16-18 Flanged Hex Nut	5/16 Bright Zinc Washer		.152 lb
2811-Black							

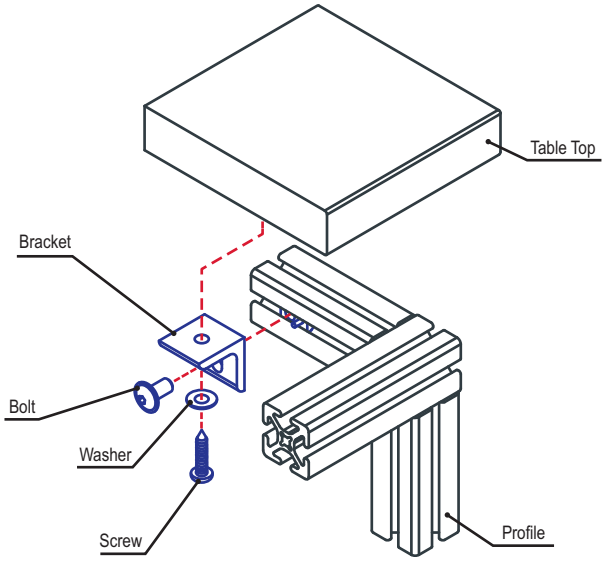

Single Arm Narrow Panel Retainer

Part Description:

The single arm narrow panel retainer is used to mount a panel when it is recessed within the T-slot or on the profile frame. It is a strong fastening option that is simple to use, provides stability, and reduces vibration. The single arm narrow panel retainer is frequently used when mounting one panel to a profile or in instances when larger profile series are used to mount two panels. It requires a drill through machining service on the panel; for information on machining services see page 905.

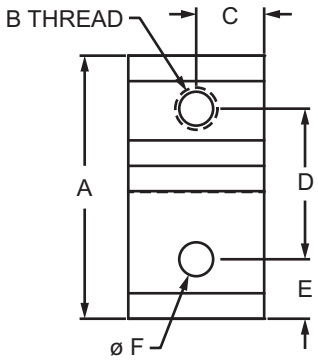

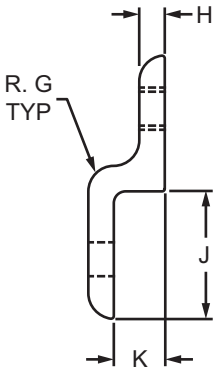

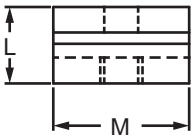

Part No.	Series	A	B	C	D	E	F	G	H	J	K	L	M	Weight
2496	10	1.935"	1/4-20	.500"	1.108"	.437"	.257"	.187"	.188"	.937"	.375"	.543"	1.000"	.039 lb
2496-Black	10	1.935"	1/4-20	.500"	1.108"	.437"	.257"	.187"	.188"	.937"	.375"	.543"	1.000"	.039 lb
2434	15	2.874"	5/16-18	.750"	1.656"	.625"	.328"	.250"	.250"	1.377"	.590"	.840"	1.500"	.117 lb
2434-Black	15	2.874"	5/16-18	.750"	1.656"	.625"	.328"	.250"	.250"	1.377"	.590"	.840"	1.500"	.117 lb
20-2496	20	39.00mm	M5 x 0.8	10.00mm	22.00mm	8.51mm	5.50mm	3.00mm	3.00mm	19.00mm	7.20mm	10.20mm	20.00mm	.0065 kg
20-2496-Black	20	39.00mm	M5 x 0.8	10.00mm	22.00mm	8.51mm	5.50mm	3.00mm	3.00mm	19.00mm	7.20mm	10.20mm	20.00mm	.0065 kg
25-2496	25	48.50mm	M6 x 1.0	12.50mm	27.95mm	10.75mm	6.30mm	4.00mm	4.00mm	23.50mm	9.30mm	13.30mm	25.00mm	.0143 kg
25-2496-Black	25	48.50mm	M6 x 1.0	12.50mm	27.95mm	10.75mm	6.30mm	4.00mm	4.00mm	23.50mm	9.30mm	13.30mm	25.00mm	.0143 kg
30-2434	30	58.00mm	M8 x 1.25	15.00mm	32.50mm	12.50mm	8.30mm	4.00mm	4.00mm	28.00mm	10.59mm	11.20mm	30.00mm	.0194 kg
30-2434-Black	30	58.00mm	M8 x 1.25	15.00mm	32.50mm	12.50mm	8.30mm	4.00mm	4.00mm	28.00mm	10.59mm	11.20mm	30.00mm	.0194 kg
40-2434	40	77.00mm	M8 x 1.25	20.00mm	44.40mm	16.80mm	8.30mm	6.00mm	6.00mm	37.00mm	15.95mm	21.95mm	40.00mm	.0561 kg
40-2434-Black	40	77.00mm	M8 x 1.25	20.00mm	44.40mm	16.80mm	8.30mm	6.00mm	6.00mm	37.00mm	15.95mm	21.95mm	40.00mm	.0561 kg
45-2434	45	87.00mm	M8 x 1.25	22.50mm	48.50mm	19.00mm	8.30mm	6.00mm	6.00mm	42.00mm	17.30mm	23.30mm	45.00mm	.0709 kg
45-2434-Black	45	87.00mm	M8 x 1.25	22.50mm	48.50mm	19.00mm	8.30mm	6.00mm	6.00mm	42.00mm	17.30mm	23.30mm	45.00mm	.0709 kg

CONTINUE

Single Arm Narrow Panel Retainer (Continued)

Material Specifications

Part No.	Material	Alloy*	Process	Finish
2496	Aluminum	6105-T5	Milled	Clear Anodize
2496-Black				Black Anodize
2434				Clear Anodize
2434-Black				Black Anodize
20-2496				Clear Anodize
20-2496-Black				Black Anodize
25-2496				Clear Anodize
25-2496-Black				Black Anodize
30-2434				Clear Anodize
30-2434-Black				Black Anodize
40-2434				Clear Anodize
40-2434-Black				Black Anodize
45-2434				Clear Anodize
45-2434-Black				Black Anodize

* Or comparable

Required Machining Services

Machining Type	Machined	Reference Page
Panel Retainer Milling	Mounting Panel	905

Suggested Hardware (Mount to T-Slot)

Part No.	Series	Qty.	Bolt	T-Nut
3321	10	1	1/4-20 x 1/2 FBHSCS	Economy
3320	15	1	5/16-18 x 11/16 FBHSCS	Economy
75-3581	20	1	M5 x 8mm BHSCS	Economy
75-3404	25	1	M6 x 10mm BHSCS	Economy
75-3615	30	1	M8 x 12mm BHSCS	Roll-in
75-3422	40	1	M8 x 16mm BHSCS	Economy
75-3619	45	1	M8 x 18mm BHSCS	Drop-in

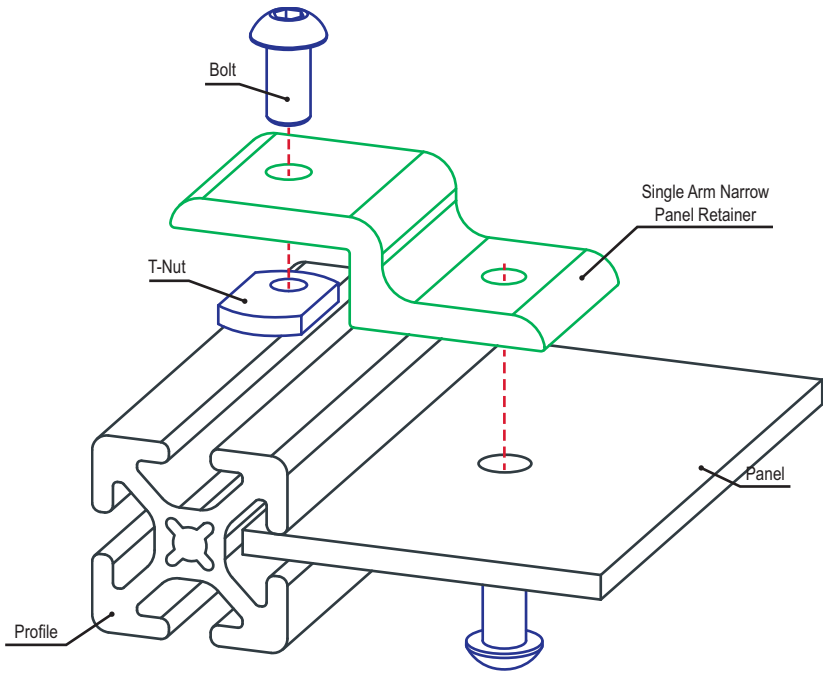

Single Arm Wide Panel Retainer

Part Description:

The single arm wide panel retainer is used to mount a panel when it is recessed within the T-slot or on the profile frame. This is a stronger connection that is also simple to use, provides stability and reduces vibration. The single arm wide panel retainer is frequently used when mounting one panel to a profile or in instances when larger profile series are used to mount two panels. It requires a drill through machining service on the panel; for information on machining services see page 905.

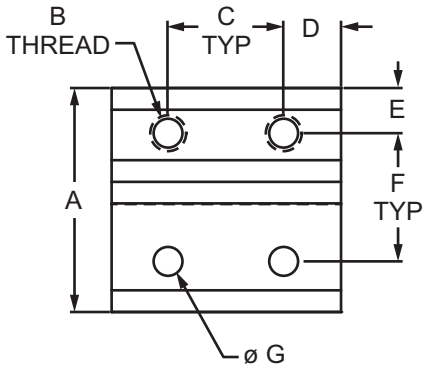

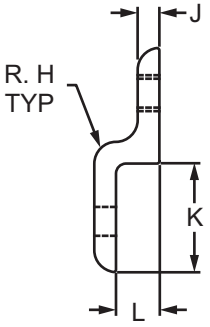

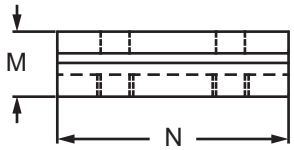

Part No.	Series	A	B	C	D	E	F	G	H	J	K	L	M	N	Weight
2497	10	1.935"	1/4-20	1.000"	.500"	.391"	1.108"	.257"	.187"	.188"	.937"	.375"	.563"	2.000"	.028 lb
2497-Black	10	1.935"	1/4-20	1.000"	.500"	.391"	1.108"	.257"	.187"	.188"	.937"	.375"	.563"	2.000"	.028 lb
2433	15	2.879"	5/16-18	1.500"	.750"	.594"	1.656"	.328"	.250"	.250"	1.379"	.590"	.840"	3.000"	.236 lb
2433-Black	15	2.879"	5/16-18	1.500"	.750"	.594"	1.656"	.328"	.250"	.250"	1.379"	.590"	.840"	3.000"	.236 lb
20-2497	20	39.00mm	M5 x 0.8	20.00mm	10.00mm	8.51mm	22.00mm	5.54mm	3.00mm	3.00mm	19.00mm	7.20mm	10.20mm	40.00mm	.0132 kg
20-2497-Black	20	39.00mm	M5 x 0.8	20.00mm	10.00mm	8.51mm	22.00mm	5.54mm	3.00mm	3.00mm	19.00mm	7.20mm	10.20mm	40.00mm	.0132 kg
25-2497	25	48.50mm	M6 x 1.0	25.00mm	12.50mm	9.80mm	27.95mm	6.30mm	4.00mm	4.00mm	23.50mm	9.30mm	13.30mm	50.00mm	.0129 kg
25-2497-Black	25	48.50mm	M6 x 1.0	25.00mm	12.50mm	9.80mm	27.95mm	6.30mm	4.00mm	4.00mm	23.50mm	9.30mm	13.30mm	50.00mm	.0129 kg
30-2433	30	58.00mm	M8 x 1.25	30.00mm	30.00mm	13.00mm	32.51mm	8.28mm	4.00mm	4.00mm	28.00mm	10.60mm	14.60mm	60.00mm	.0391 kg
30-2433-Black	30	58.00mm	M8 x 1.25	30.00mm	30.00mm	13.00mm	32.51mm	8.28mm	4.00mm	4.00mm	28.00mm	10.60mm	14.60mm	60.00mm	.0391 kg
40-2433	40	77.00mm	M8 x 1.25	40.00mm	20.00mm	15.80mm	44.40mm	8.28mm	6.00mm	6.00mm	37.00mm	16.00mm	22.00mm	80.00mm	.1103 kg
40-2433-Black	40	77.00mm	M8 x 1.25	40.00mm	20.00mm	15.80mm	44.40mm	8.28mm	6.00mm	6.00mm	37.00mm	16.00mm	22.00mm	80.00mm	.1103 kg
45-2433	45	87.00mm	M8 x 1.25	45.00mm	22.50mm	19.50mm	48.50mm	8.28mm	6.00mm	6.00mm	42.00mm	17.30mm	23.30mm	90.00mm	.1441 kg
45-2433-Black	45	87.00mm	M8 x 1.25	45.00mm	22.50mm	19.50mm	48.50mm	8.28mm	6.00mm	6.00mm	42.00mm	17.30mm	23.30mm	90.00mm	.1441 kg

CONTINUE

Single Arm Wide Panel Retainer (Continued)

Material Specifications

Part No.	Material	Alloy*	Process	Finish
2497	Aluminum	6105-T5	Milled	Clear Anodize
2497-Black				Black Anodize
2433				Clear Anodize
2433-Black				Black Anodize
20-2497				Clear Anodize
20-2497-Black				Black Anodize
25-2497				Clear Anodize
25-2497-Black				Black Anodize
30-2433				Clear Anodize
30-2433-Black				Black Anodize
40-2433				Clear Anodize
40-2433-Black				Black Anodize
45-2433				Clear Anodize
45-2433-Black				Black Anodize

* Or comparable

Required Machining Services

Machining Type	Machined	Reference Page
Panel Retainer Milling	Mounting Panel	905

Suggested Hardware (Mount to T-Slot)

Part No.	Series	Qty.	Bolt	T-Nut
3321	10	2	1/4-20 x 1/2 FBHSCS	Economy
3320	15	2	5/16-18 x 11/16 FBHSCS	Economy
75-3581	20	2	M5 x 8mm BHSCS	Economy
75-3404	25	2	M6 x 10mm BHSCS	Economy
75-3615	30	2	M8 x 12mm BHSCS	Roll-in
75-3422	40	2	M8 x 16mm BHSCS	Economy
75-3619	45	2	M8 x 18mm BHSCS	Drop-in

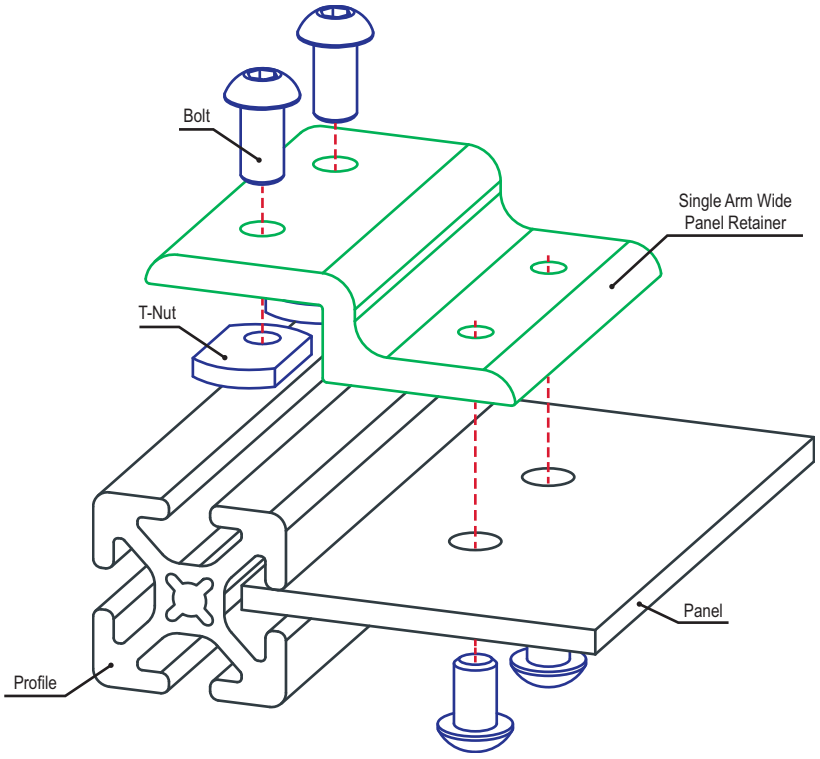

Double Arm Narrow Panel Retainer

Part Description:

The double arm narrow panel retainer is used to mount a panel when it is recessed within the T-slot or on the profile frame. It is a strong fastening option that is simple to use, provides stability and reduces vibration. The double arm narrow panel retainer is perfect in instances when a profile is connecting two adjacent panels. It requires a drill through machining service on the panel; for information on machining services see page 905.

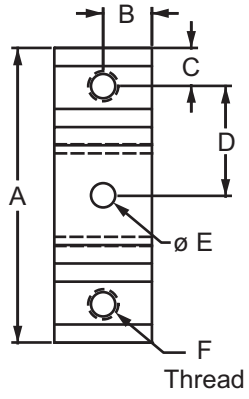

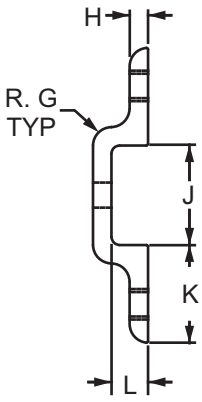

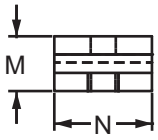

Part No.	Series	A	B	C	D	E	F	G	H	J	K	L	M	N	Weight
2512	10	3.021"	.500"	.392"	1.119"	.257"	1/4-20	.188"	.188"	1.021"	1.000"	.375"	.563"	1.000"	.064 lb
2512-Black	10	3.021"	.500"	.392"	1.119"	.257"	1/4-20	.188"	.188"	1.021"	1.000"	.375"	.563"	1.000"	.064 lb
2515	15	4.523"	.750"	.594"	1.668"	.328"	5/16-18	.250"	.250"	1.523"	1.500"	.590"	.840"	1.500"	.199 lb
2515-Black	15	4.523"	.750"	.594"	1.668"	.328"	5/16-18	.250"	.250"	1.523"	1.500"	.590"	.840"	1.500"	.199 lb
25-2512	25	75.49mm	12.50mm	9.80mm	27.94mm	6.30mm	M6 x 1.0	4.00mm	4.00mm	25.50mm	25.00mm	9.30mm	13.28mm	25.00mm	.0105 kg
25-2512-Black	25	75.49mm	12.50mm	9.80mm	27.94mm	6.30mm	M6 x 1.0	4.00mm	4.00mm	25.50mm	25.00mm	9.30mm	13.28mm	25.00mm	.0105 kg
40-2515	40	120.60mm	20.00mm	15.80mm	44.50mm	8.28mm	M8 x 1.25	6.00mm	6.00mm	40.59mm	40.00mm	16.00mm	22.00mm	40.00mm	.0952 kg
40-2515-Black	40	120.60mm	20.00mm	15.80mm	44.50mm	8.28mm	M8 x 1.25	6.00mm	6.00mm	40.59mm	40.00mm	16.00mm	22.00mm	40.00mm	.0952 kg

CONTINUE

Double Arm Narrow Panel Retainer (Continued)

Material Specifications

Part No.	Material	Alloy*	Process	Finish
2512	Aluminum	6105-T5	Milled	Clear Anodize
2512-Black				Black Anodize
2515				Clear Anodize
2515-Black				Black Anodize
25-2512				Clear Anodize
25-2512-Black				Black Anodize
40-2515				Clear Anodize
40-2515-Black				Black Anodize

* Or comparable

Required Machining Services

Machining Type	Machined	Reference Page
Panel Retainer Milling	Mounting Panel	905

Suggested Hardware (Mount to T-Slot)

Part No.	Series	Qty.	Bolt	T-Nut
3321	10	1	1/4-20 x 1/2 FBHSCS	Economy
3320	15	1	5/16-18 x 11/16 FBHSCS	Economy
75-3404	25	1	M6 x 10mm BHSCS	Economy
75-3422	40	1	M8 x 16mm BHSCS	Economy

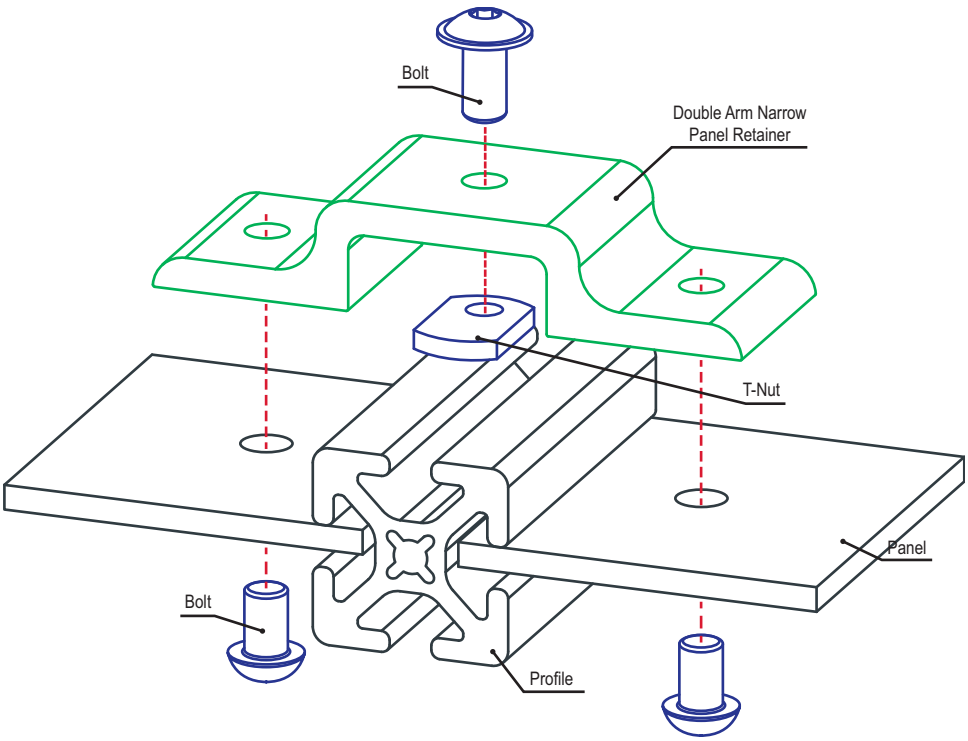

Single Arm Narrow Mesh Retainer

Part Description:

The single arm narrow mesh retainer is used to mount a mesh panel when it is recessed within the T-slot or on the profile frame. It provides stability and reduces vibration while also being a strong fastening option that is simple to use and can be easily repositioned. The single arm narrow mesh retainer is frequently used when mounting one mesh panel to a profile or in instances when larger profile series are used to mount two mesh panels. It has a slotted hole to allow for positioning so that the bolt doesn't crash into the mesh. The mesh retainer requires a backing plate, which can be found on page 498. The suggested hardware to mount the retainer to the T-slot is listed below while the hardware for the backing plate should be based on the panel type and thickness.

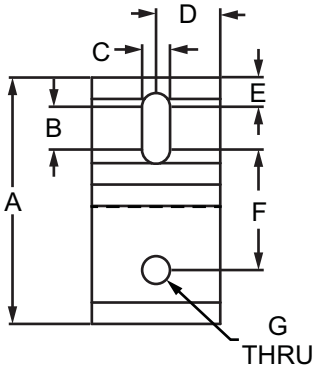

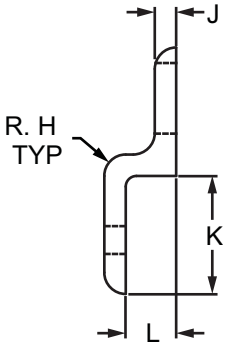

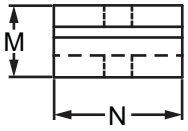

Part No.	Series	A	B	C	D	E	F	G	H	J	K	L	M	N	Weight
2490	10	1.938"	.375"	.257"	.500"	.250"	.875"	.257"	.188"	.188"	.938"	.375"	.563"	1.000"	.037 lb
2490-Black	10	1.938"	.375"	.257"	.500"	.250"	.875"	.257"	.188"	.188"	.938"	.375"	.563"	1.000"	.037 lb
2432	15	2.879"	.500"	.328"	.750"	.344"	1.406"	.328"	.250"	.250"	1.379"	.590"	.840"	1.500"	.113 lb
2432-Black	15	2.879"	.500"	.328"	.750"	.344"	1.406"	.328"	.250"	.250"	1.379"	.590"	.840"	1.500"	.113 lb
20-2490	20	39.00mm	5.46mm	5.54mm	10.00mm	5.77mm	19.25mm	5.54mm	3.00mm	3.00mm	19.00mm	7.19mm	10.19mm	20.00mm	.0059 kg
20-2490-Black	20	39.00mm	5.46mm	5.54mm	10.00mm	5.77mm	19.25mm	5.54mm	3.00mm	3.00mm	19.00mm	7.19mm	10.19mm	20.00mm	.0059 kg
25-2490	25	48.50mm	9.40mm	6.30mm	16.00mm	6.00mm	22.10mm	6.30mm	4.00mm	4.00mm	23.50mm	9.30mm	13.31mm	32.00mm	.0178 kg
25-2490-Black	25	48.50mm	9.40mm	6.30mm	16.00mm	6.00mm	22.10mm	6.30mm	4.00mm	4.00mm	23.50mm	9.30mm	13.31mm	32.00mm	.0178 kg
30-2432	30	58.00mm	9.75mm	8.28mm	15.00mm	8.13mm	27.64mm	8.28mm	4.00mm	4.00mm	28.00mm	10.60mm	14.60mm	30.00mm	.0499 kg
30-2432-Black	30	58.00mm	9.75mm	8.28mm	15.00mm	8.13mm	27.64mm	8.28mm	4.00mm	4.00mm	28.00mm	10.60mm	14.60mm	30.00mm	.0499 kg
40-2432	40	77.00mm	13.31mm	8.28mm	20.00mm	9.00mm	37.90mm	8.28mm	6.00mm	6.00mm	37.00mm	16.00mm	22.00mm	40.00mm	.0536 kg
40-2432-Black	40	77.00mm	13.31mm	8.28mm	20.00mm	9.00mm	37.90mm	8.28mm	6.00mm	6.00mm	37.00mm	16.00mm	22.00mm	40.00mm	.0536 kg
45-2432	45	87.00mm	18.69mm	8.28mm	22.50mm	10.16mm	39.14mm	8.28mm	6.00mm	6.00mm	42.00mm	17.30mm	23.29mm	45.00mm	.0692 kg
45-2432-Black	45	87.00mm	18.69mm	8.28mm	22.50mm	10.16mm	39.14mm	8.28mm	6.00mm	6.00mm	42.00mm	17.30mm	23.29mm	45.00mm	.0692 kg

CONTINUE

Single Arm Narrow Mesh Retainer (Continued)

Material Specifications

Part No.	Material	Alloy*	Process	Finish
2490	Aluminum	6105-T5	Milled	Clear Anodize
2490-Black				Black Anodize
2432				Clear Anodize
2432-Black				Black Anodize
20-2490				Clear Anodize
20-2490-Black				Black Anodize
25-2490				Clear Anodize
25-2490-Black				Black Anodize
30-2432				Clear Anodize
30-2432-Black				Black Anodize
40-2432				Clear Anodize
40-2432-Black				Black Anodize
45-2432				Clear Anodize
45-2432-Black				Black Anodize

* Or comparable

Suggested Hardware (Mount to T-Slot)

Part No.	Series	Qty.	Bolt	T-Nut
3321	10	1	1/4-20 x 1/2 FBHSCS	Economy
3320	15	1	5/16-18 x 11/16 FBHSCS	Economy
75-3581	20	1	M5 x 8mm BHSCS	Economy
75-3404	25	1	M6 x 10mm BHSCS	Economy
75-3615	30	1	M8 x 12mm BHSCS	Roll-in
75-3422	40	1	M8 x 16mm BHSCS	Economy
75-3619	45	1	M8 x 18mm BHSCS	Drop-in

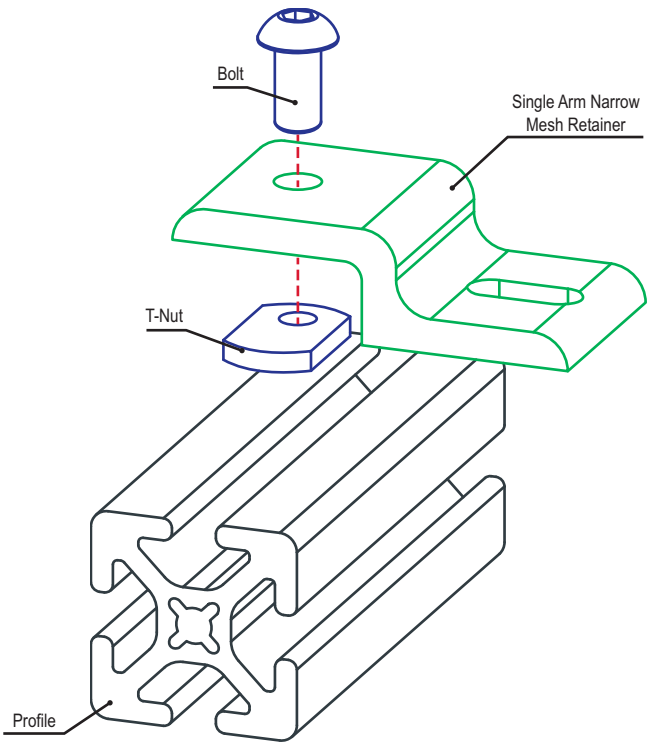

Single Arm Wide Mesh Retainer

Part Description:

The single arm wide mesh retainer is used to mount a mesh panel when it is recessed within the T-slot or on the profile frame. It provides stability and reduces vibration while also being a strong fastening option that is simple to use and easily repositioned. The single arm wide mesh retainer is frequently used when mounting one mesh panel to a profile or in instances when larger profile series are used to mount two mesh panels. It has slotted holes to allow for positioning so that the bolts don't crash into the mesh. The mesh retainer requires a backing plate, which can be found on page 499. The suggested hardware to mount the retainer to the T-slot is listed below while the hardware for the backing plate should be based on the panel type and thickness.

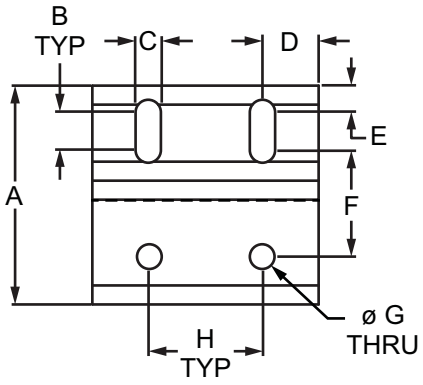

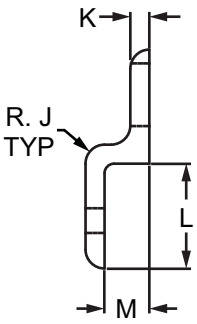

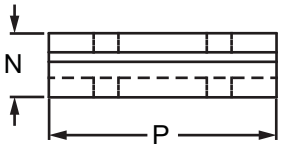

Part No.	Series	A	B	C	D	E	F	G	H	J	K	L	M	N	P	Weight
2493	10	1.938"	.375"	.257"	.500"	.250"	.875"	.257"	1.000"	.188"	.188"	.938"	.375"	.563"	2.000"	.073 lb
2493-Black	10	1.938"	.375"	.257"	.500"	.250"	.875"	.257"	1.000"	.188"	.188"	.938"	.375"	.563"	2.000"	.073 lb
2431	15	2.879"	.500"	.328"	.750"	.344"	1.406"	.328"	1.500"	.250"	.250"	1.379"	.590"	.840"	3.000"	.228 lb
2431-Black	15	2.879"	.500"	.328"	.750"	.344"	1.406"	.328"	1.500"	.250"	.250"	1.379"	.590"	.840"	3.000"	.228 lb
20-2493	20	39.00mm	27.77mm	5.54mm	10.00mm	5.77mm	19.25mm	5.54mm	20.00mm	3.00mm	3.00mm	19.00mm	7.18mm	10.19mm	40.00mm	.0127 kg
20-2493-Black	20	39.00mm	27.77mm	5.54mm	10.00mm	5.77mm	19.25mm	5.54mm	20.00mm	3.00mm	3.00mm	19.00mm	7.18mm	10.19mm	40.00mm	.0127 kg
25-2493	25	48.49mm	9.40mm	6.30mm	12.50mm	6.00mm	22.10mm	6.30mm	25.00mm	4.00mm	4.00mm	23.50mm	9.30mm	13.30mm	50.00mm	.0124 kg
25-2493-Black	25	48.49mm	9.40mm	6.30mm	12.50mm	6.00mm	22.10mm	6.30mm	25.00mm	4.00mm	4.00mm	23.50mm	9.30mm	13.30mm	50.00mm	.0124 kg
30-2431	30	58.00mm	9.75mm	8.28mm	15.00mm	8.13mm	27.64mm	8.28mm	30.00mm	4.00mm	4.00mm	28.00mm	10.60mm	14.58mm	60.00mm	.0369 kg
30-2431-Black	30	58.00mm	9.75mm	8.28mm	15.00mm	8.13mm	27.64mm	8.29mm	30.00mm	4.00mm	4.00mm	28.00mm	10.60mm	14.58mm	60.00mm	.0369 kg
40-2431	40	77.00mm	13.31mm	8.28mm	20.00mm	9.00mm	37.90mm	8.28mm	40.00mm	6.00mm	6.00mm	37.00mm	16.00mm	22.00mm	80.00mm	.1074 kg
40-2431-Black	40	77.00mm	13.31mm	8.28mm	20.00mm	9.00mm	37.90mm	8.28mm	40.00mm	6.00mm	6.00mm	37.00mm	16.00mm	22.00mm	80.00mm	.1074 kg
45-2431	45	87.00mm	18.69mm	8.28mm	22.50mm	10.16mm	39.14mm	8.28mm	45.00mm	6.00mm	6.00mm	41.00mm	17.30mm	23.30mm	90.00mm	.1372 kg
45-2431-Black	45	87.00mm	18.69mm	8.28mm	22.50mm	10.16mm	39.14mm	8.28mm	45.00mm	6.00mm	6.00mm	41.00mm	17.30mm	23.30mm	90.00mm	.1372 kg

CONTINUE

Single Arm Wide Mesh Retainer (Continued)

Material Specifications

Part No.	Material	Alloy*	Process	Finish
2493	Aluminum	6105-T5	Milled	Clear Anodize
2493-Black				Black Anodize
2431				Clear Anodize
2431-Black				Black Anodize
20-2493				Clear Anodize
20-2493-Black				Black Anodize
25-2493				Clear Anodize
25-2493-Black				Black Anodize
30-2431				Clear Anodize
30-2431-Black				Black Anodize
40-2431				Clear Anodize
40-2431-Black				Black Anodize
45-2431				Clear Anodize
45-2431-Black				Black Anodize

* Or comparable

Suggested Hardware (Mount to T-Slot)

Part No.	Series	Qty.	Bolt	T-Nut
3321	10	2	1/4-20 x 1/2 FBHSCS	Economy
3320	15	2	5/16-18 x 11/16 FBHSCS	Economy
75-3581	20	2	M5 x 8mm BHSCS	Economy
75-3404	25	2	M6 x 10mm BHSCS	Economy
75-3615	30	2	M8 x 12mm BHSCS	Roll-in
75-3422	40	2	M8 x 16mm BHSCS	Economy
75-3619	45	2	M8 x 18mm BHSCS	Drop-in

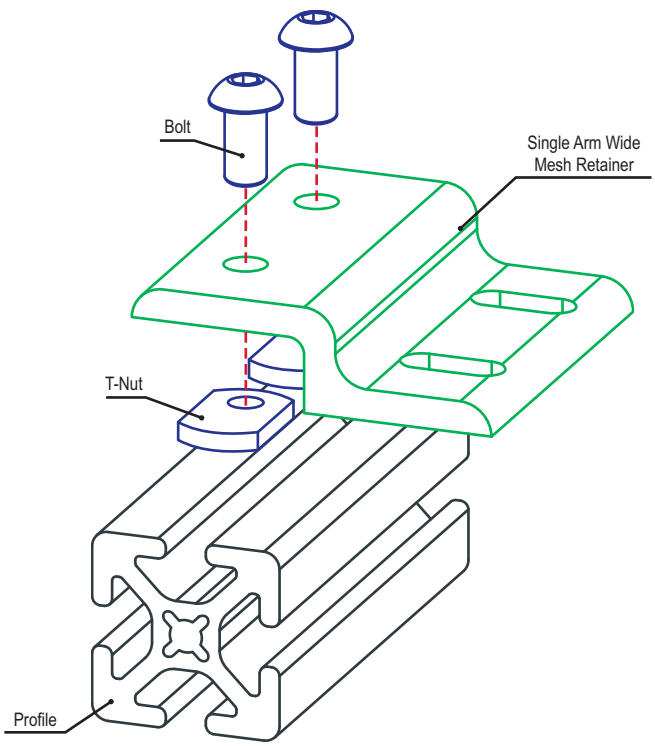

Double Arm Narrow Mesh Retainer

Part Description:

The double arm narrow mesh retainer is used to mount a mesh panel when it is recessed within the T-slot or on the profile frame. It provides stability and reduces vibration while also being a strong fastening option that is simple to use and easily repositioned. The double arm narrow mesh retainer is perfect in instances when a profile is connecting two adjacent panels. It has slotted holes to allow for positioning so that the bolts won't crash into the mesh. The mesh retainer requires backing plates, which can be found on page 498. The suggested hardware to mount the retainer to the T-slot is listed below while the hardware for the backing plates should be based on the panel type and thickness.

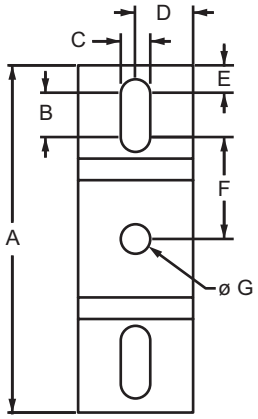

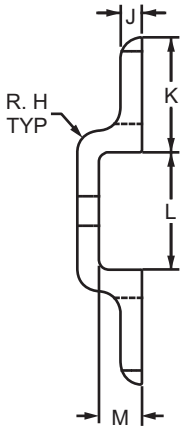

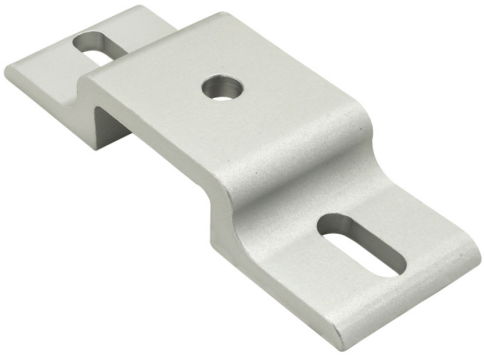

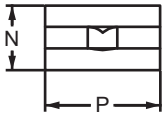

Part No.	Series	A	B	C	D	E	F	G	H	J	K	L	M	N	P	Weight
2521	10	3.020"	.375"	.257"	.500"	.249"	.886"	.257"	.188"	.188"	1.000"	1.020"	.375"	.563"	1.000"	.061 lb
2521-Black	10	3.020"	.375"	.257"	.500"	.249"	.886"	.257"	.188"	.188"	1.000"	1.020"	.375"	.563"	1.000"	.061 lb
2517	15	4.522"	.500"	.328"	.750"	.344"	1.417"	.328"	.250"	.250"	1.500"	1.522"	.590"	.840"	1.500"	.188 lb
2517-Black	15	4.522"	.500"	.328"	.750"	.344"	1.417"	.328"	.250"	.250"	1.500"	1.522"	.590"	.840"	1.500"	.188 lb
25-2521	25	75.50mm	9.40mm	6.30mm	16.00mm	6.00mm	22.35mm	6.30mm	4.00mm	4.00mm	25.00mm	25.50mm	9.30mm	13.30mm	32.00mm	.0288 kg
25-2521-Black	25	75.50mm	9.40mm	6.30mm	16.00mm	6.00mm	22.35mm	6.30mm	4.00mm	4.00mm	25.00mm	25.50mm	9.30mm	13.30mm	32.00mm	.0288 kg
40-2517	40	120.59mm	13.30mm	8.30mm	20.00mm	9.00mm	38.00mm	8.30mm	6.00mm	6.00mm	40.00mm	40.59mm	15.95mm	21.95mm	40.00mm	.0913 kg
40-2517-Black	40	120.59mm	13.30mm	8.30mm	20.00mm	9.00mm	38.00mm	8.30mm	6.00mm	6.00mm	40.00mm	40.59mm	15.95mm	21.95mm	40.00mm	.0913 kg

CONTINUE

Double Arm Narrow Mesh Retainer (Continued)

Material Specifications

Part No.	Material	Alloy*	Process	Finish
2521	Aluminum	6105-T5	Milled	Clear Anodize
2521-Black				Black Anodize
2517				Clear Anodize
2517-Black				Black Anodize
25-2521				Clear Anodize
25-2521-Black				Black Anodize
40-2517				Clear Anodize
40-2517-Black				Black Anodize

* Or comparable

Suggested Hardware (Mount to T-Slot)

Part No.	Series	Qty.	Bolt	T-Nut
3321	10	1	1/4-20 x 1/2 FBHSCS	Economy
3320	15	1	5/16-18 x 11/16 FBHSCS	Economy
75-3404	25	1	M6 x 10mm BHSCS	Economy
75-3422	40	1	M8 x 16mm BHSCS	Economy

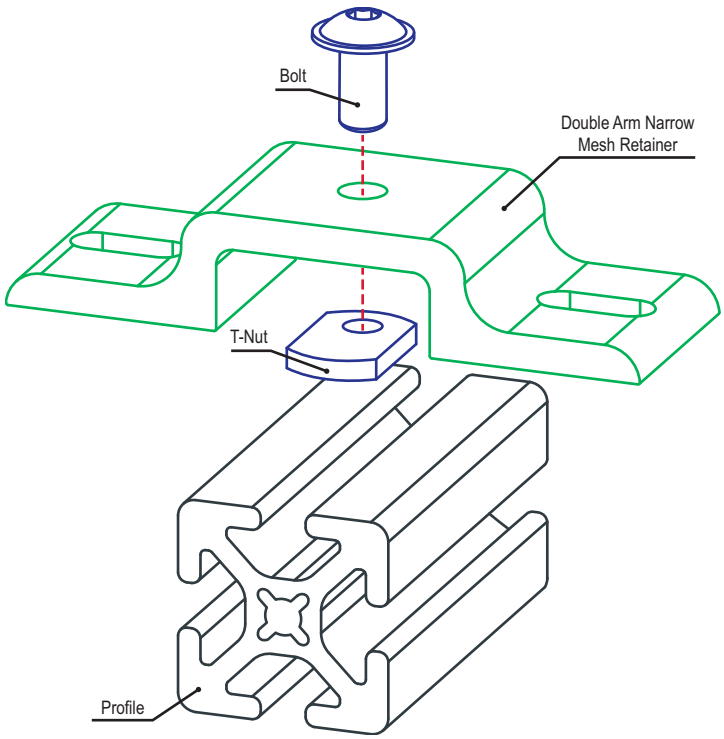

Double Arm Wide Mesh Retainer

Part Description:

The double arm wide mesh retainer is used to mount a mesh panel when it is recessed within the T-slot or on the profile frame. It provides stability and reduces vibration. The wide arm makes this a stronger connection that is simple to use and can be easily repositioned. The double arm wide mesh retainer is perfect in instances when a profile is connecting two adjacent panels. It has slotted holes to allow for positioning so that the bolts don't crash into the mesh. The double arm wide mesh retainer requires backing plates, which can be found on page 499. The suggested hardware to mount the retainer to the T-slot is listed below while the hardware for the backing plates should be based on the panel type and thickness.

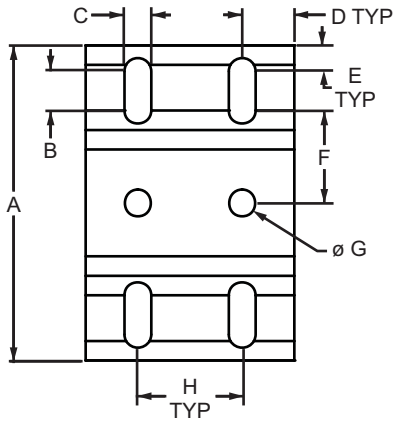

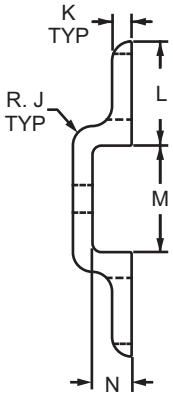

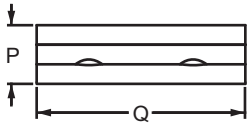

Part No.	Series	A	B	C	D	E	F	G	H	J	K	L	M	N	P	Q	Weight
2523	10	3.020"	.375"	.257"	.500"	.250"	.886"	.257"	1.000"	.188"	.188"	1.000"	1.020"	.375"	.563"	2.000"	.118 lb
2523-Black	10	3.020"	.375"	.257"	.500"	.250"	.886"	.257"	1.000"	.188"	.188"	1.000"	1.020"	.375"	.563"	2.000"	.118 lb
2519	15	4.523"	.500"	.328"	.750"	.344"	1.418"	.328"	1.500"	.250"	.250"	1.500"	1.523"	.590"	.840"	3.000"	.377 lb
2519-Black	15	4.523"	.500"	.328"	.750"	.344"	1.418"	.328"	1.500"	.250"	.250"	1.500"	1.523"	.590"	.840"	3.000"	.377 lb
25-2523	25	75.50mm	9.40mm	6.30mm	12.50mm	6.00mm	22.35mm	6.30mm	25.00mm	4.00mm	4.00mm	25.00mm	25.50mm	9.30mm	13.40mm	50.00mm	.0439 kg
25-2523-Black	25	75.50mm	9.40mm	6.30mm	12.50mm	6.00mm	22.35mm	6.30mm	25.00mm	4.00mm	4.00mm	25.00mm	25.50mm	9.30mm	13.40mm	50.00mm	.0439 kg
40-2519	40	120.60mm	13.30mm	8.30mm	20.00mm	9.00mm	38.00mm	8.30mm	40.00mm	6.00mm	6.00mm	40.00mm	40.60mm	16.00mm	22.00mm	80.00mm	.1796 kg
40-2519-Black	40	120.60mm	13.30mm	8.30mm	20.00mm	9.00mm	38.00mm	8.30mm	40.00mm	6.00mm	6.00mm	40.00mm	40.60mm	16.00mm	22.00mm	80.00mm	.1796 kg

CONTINUE

Double Arm Wide Mesh Retainer (Continued)

Material Specifications

Part No.	Material	Alloy*	Process	Finish
2523	Aluminum	6105-T5	Milled	Clear Anodize
2523-Black				Black Anodize
2519				Clear Anodize
2519-Black				Black Anodize
25-2523				Clear Anodize
25-2523-Black				Black Anodize
40-2519				Clear Anodize
40-2519-Black				Black Anodize

* Or comparable

Suggested Hardware (Mount to T-Slot)

Part No.	Series	Qty.	Bolt	T-Nut
3321	10	2	1/4-20 x 1/2 FBHSCS	Economy
3320	15	2	5/16-18 x 11/16 FBHSCS	Economy
75-3404	25	2	M6 x 10mm BHSCS	Economy
75-3422	40	2	M8 x 16mm BHSCS	Economy

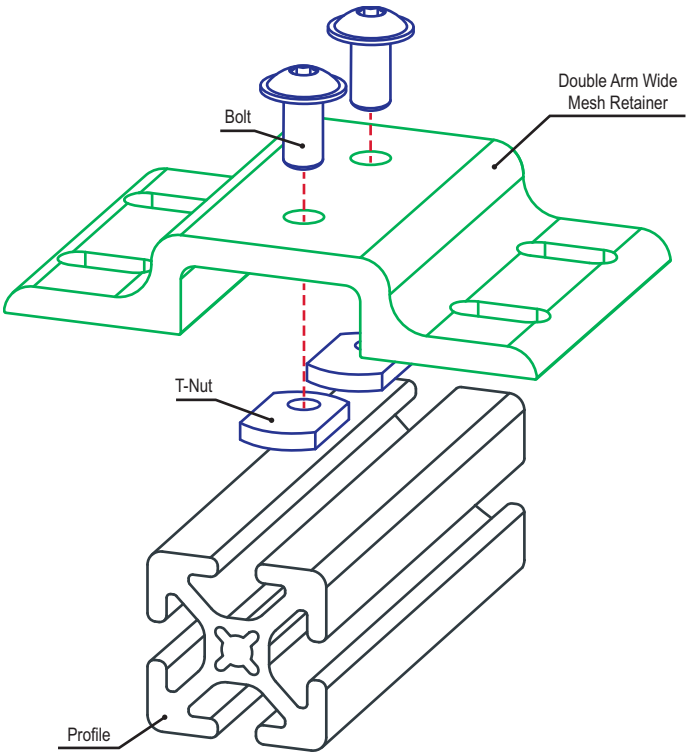

Narrow Backing Plate

Part Description:

The narrow backing plate is used with the single arm narrow mesh retainer (page 490) or the double arm narrow mesh retainer (page 494) to secure wire mesh or panels. The suggested hardware for the narrow backing plate should be based on the mesh or panel type and thickness.

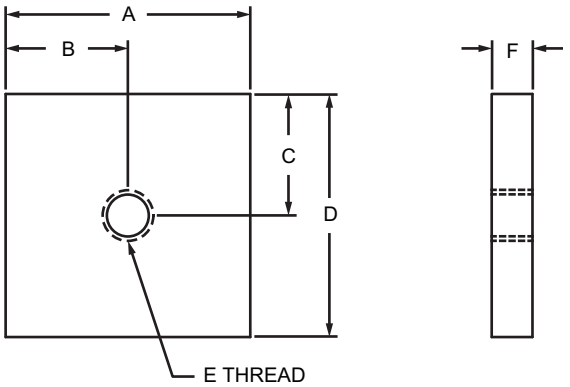

Part No.	Series	Material	Alloy*	Process	Finish	A	B	C	D	E	F	Weight
2492	10	Aluminum	6105-T5	Milled	Clear Anodize	1.000"	.500"	.500"	1.000"	1/4-20	.188"	.018 lb
2492-Black	10				Black Anodize	1.000"	.500"	.500"	1.000"	1/4-20	.188"	.018 lb
2438	15				Clear Anodize	1.50"	.750"	.745"	1.49"	5/16-18	.250"	.053 lb
2438-Black	15				Black Anodize	1.50"	.750"	.745"	1.49"	5/16-18	.250"	.053 lb
20-2492	20				Clear Anodize	32.00mm	16.00mm	9.53mm	19.05mm	M5 x 0.8	4.78mm	.0077 kg
20-2492-Black	20				Black Anodize	32.00mm	16.00mm	9.53mm	19.05mm	M5 x 0.8	4.78mm	.0077 kg
25-2492	25				Clear Anodize	32.00mm	16.00mm	12.50mm	25.00mm	M6 x 1.0	4.00mm	.0081kg
25-2492-Black	25				Black Anodize	32.00mm	16.00mm	12.50mm	25.00mm	M6 x 1.0	4.00mm	.0081 kg
30-2438	30				Clear Anodize	30.00mm	15.00mm	12.50mm	25.00mm	M8 x 1.25	4.00mm	.0100 kg
30-2438-Black	30				Black Anodize	30.00mm	15.00mm	12.50mm	25.00mm	M8 x 1.25	4.00mm	.0100 kg
40-2438	40				Clear Anodize	40.00mm	20.00mm	19.89mm	39.80mm	M8 x 1.25	6.00mm	.0245 kg
40-2438-Black	40				Black Anodize	40.00mm	20.00mm	19.89mm	39.80mm	M8 x 1.25	6.00mm	.0245 kg
45-2438	45				Clear Anodize	45.00mm	22.50mm	19.89mm	39.80mm	M8 x 1.25	6.00mm	.0278 kg
45-2438-Black	45				Black Anodize	45.00mm	22.50mm	19.89mm	39.80mm	M8 x 1.25	6.00mm	.0278 kg

* Or comparable

Suggested Hardware (Mount to Backing Plate)

Part No.	Series	Qty.	Bolt
3063	10	1	1/4-20 x 1/2 BHSCS
3114	15	1	5/16-18 x 11/16 BHSCS
11-5310	20	1	M5 x 10mm BHSCS
13-6312	25	1	M6 x 12mm BHSCS
11-8316	30	1	M8 x 16mm BHSCS
13-8320	40	1	M8 x 20mm BHSCS
11-8318	45	1	M8 x 18mm BHSCS

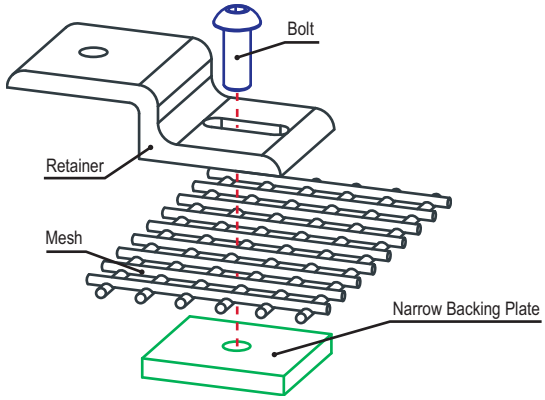

Part Description:

The wide backing plate is used with the single arm wide mesh retainer (page 492) or the double arm wide mesh retainer (page 496) to secure wire mesh or panels. The suggested hardware for the wide backing plate should be based on the mesh or panel type and thickness.

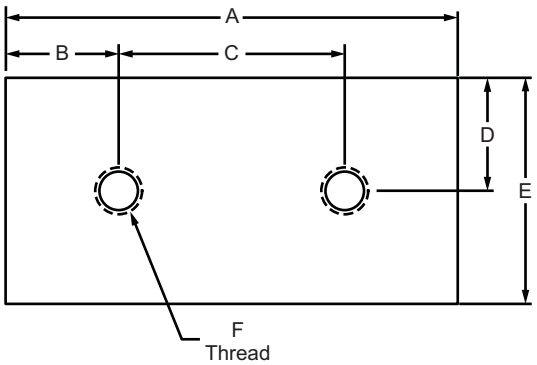

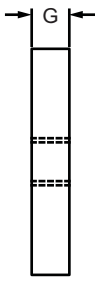

Part No.	Series	Material	Alloy*	Process	Finish	A	B	C	D	E	F	G	Weight
2495	10	Aluminum	6105-T5	Milled	Clear Anodize	2.000"	.500"	1.000"	.500"	1.000"	1/4-20	.188"	.036 lb
2495-Black	10				Black Anodize	2.000"	.500"	1.000"	.500"	1.000"	1/4-20	.188"	.036 lb
2437	15				Clear Anodize	3.000"	.750"	1.500"	.745"	1.49"	5/16-18	.250"	.104 lb
2437-Black	15				Black Anodize	3.000"	.750"	1.500"	.745"	1.49"	5/16-18	.250"	.104 lb
20-2495	20				Clear Anodize	40.00mm	10.00mm	20.00mm	9.53mm	19.05mm	M5 x 0.8	4.78mm	.0095 kg
20-2495-Black	20				Black Anodize	40.00mm	10.00mm	20.00mm	9.53mm	19.05mm	M5 x 0.8	4.78mm	.0095 kg
25-2495	25				Clear Anodize	50.00mm	12.50mm	25.00mm	12.50mm	25.00mm	M6 x 1.0	4.00mm	.0127 kg
25-2495-Black	25				Black Anodize	50.00mm	12.50mm	25.00mm	12.50mm	25.00mm	M6 x 1.0	4.00mm	.0127 kg
30-2437	30				Clear Anodize	60.00mm	15.00mm	30.00mm	12.50mm	25.00mm	M8 x 1.25	4.00mm	.0150 kg
30-2437-Black	30				Black Anodize	60.00mm	15.00mm	30.00mm	12.50mm	25.00mm	M8 x 1.25	4.00mm	.0150 kg
40-2437	40				Clear Anodize	80.00mm	20.00mm	40.00mm	19.89mm	39.80mm	M8 x 1.25	6.00mm	.0490 kg
40-2437-Black	40				Black Anodize	80.00mm	20.00mm	40.00mm	19.89mm	39.80mm	M8 x 1.25	6.00mm	.0490 kg
45-2437	45				Clear Anodize	90.00mm	22.50mm	45.00mm	19.89mm	39.80mm	M8 x 1.25	6.00mm	.0553 kg
45-2437-Black	45				Black Anodize	90.00mm	22.50mm	45.00mm	19.89mm	39.80mm	M8 x 1.25	6.00mm	.0553 kg

* Or comparable

Suggested Hardware (Mount to Backing Plate)

Part No.	Series	Qty.	Bolt
3063	10	2	1/4-20 x 1/2 BHSCS
3114	15	2	5/16-18 x 11/16 BHSCS
11-5310	20	2	M5 x 10mm BHSCS
13-6312	25	2	M6 x 12mm BHSCS
11-8316	30	2	M8 x 16mm BHSCS
13-8320	40	2	M8 x 20mm BHSCS
11-8318	45	2	M8 x 18mm BHSCS

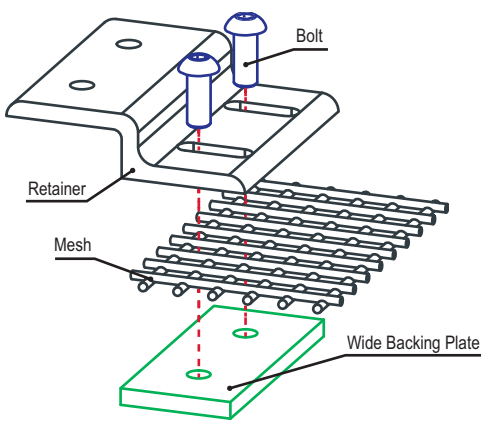

Single Arm Narrow Mesh Retainer with Narrow Backing Plate

80/20 Inc.

Part Description:

The single arm narrow mesh retainer with narrow backing plate consists of one single arm narrow mesh retainer (page 490) and one narrow backing plate (page 498). The hardware to attach the backing plate to the retainer should be selected based on the wire mesh panel type and thickness. The suggested hardware to mount the retainer to the T-slot can be found on below.

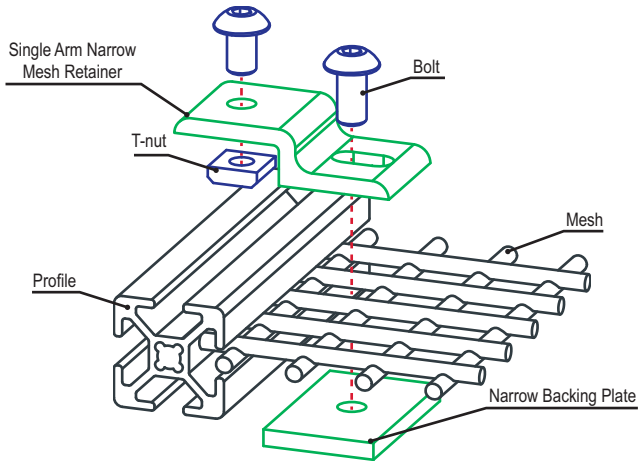

Part No.	Series	Material	Alloy*	Process	Finish	Weight
2491	10	Aluminum	6105-T5	Milled	Clear Anodize	.054 lb
2491-Black	10				Black Anodize	.054 lb
2436	15				Clear Anodize	.165 lb
2436-Black	15				Black Anodize	.165 lb
20-2491	20				Clear Anodize	.0222 kg
20-2491-Black	20				Black Anodize	.0222 kg
25-2491	25				Clear Anodize	.0259 kg
25-2491-Black	25				Black Anodize	.0259 kg
30-2436	30				Clear Anodize	.0259 kg
30-2436-Black	30				Black Anodize	.0259 kg
40-2436	40				Clear Anodize	.0786 kg
40-2436-Black	40				Black Anodize	.0786 kg
45-2436	45				Clear Anodize	.0970 kg
45-2436-Black	45				Black Anodize	.0970 kg

* Or comparable

Suggested Hardware (Mount to T-Slot)

Part No.	Series	Qty.	Bolt	T-Nut
3321	10	1	1/4-20 x 1/2 FBHSCS	Economy
3320	15	1	5/16-18 x 11/16 FBHSCS	Economy
75-3581	20	1	M5 x 8mm BHSCS	Economy
75-3404	25	1	M6 x 10mm BHSCS	Economy
75-3615	30	1	M8 x 12mm BHSCS	Roll-in
75-3422	40	1	M8 x 16mm BHSCS	Economy
75-3619	45	1	M8 x 18mm BHSCS	Drop-in

Suggested Hardware (Mount to Backing Plate)

Part No.	Series	Qty.	Bolt
3063	10	1	1/4-20 x 1/2 BHSCS
3114	15	1	5/16-18 x 11/16 BHSCS
11-5310	20	1	M5 x 10mm BHSCS
13-6312	25	1	M6 x 12mm BHSCS
11-8316	30	1	M8 x 16mm BHSCS
13-8320	40	1	M8 x 20mm BHSCS
11-8318	45	1	M8 x 18mm BHSCS

Single Arm Wide Mesh Retainer with Wide Backing Plate

Part Description:

The single arm wide mesh retainer with wide backing plate consists of one single arm wide mesh retainer (page 492) and one wide backing plate (page 499). The hardware to attach the backing plate to the retainer should be selected based on the wire mesh panel type and thickness. The suggested hardware to mount the retainer to the T-slot can be found below.

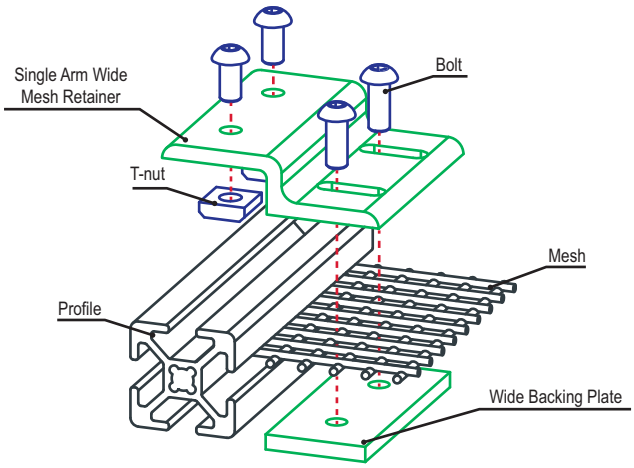

Part No.	Series	Material	Alloy*	Process	Finish	Weight
2494	10	Aluminum	6105-T5	Milled	Clear Anodize	.109 lb
2494-Black	10				Black Anodize	.109 lb
2435	15				Clear Anodize	.331 lb
2435-Black	15				Black Anodize	.331 lb
20-2494	20				Clear Anodize	.0218 kg
20-2494-Black	20				Black Anodize	.0218 kg
25-2494	25				Clear Anodize	.0400 kg
25-2494-Black	25				Black Anodize	.0400 kg
30-2435	30				Clear Anodize	.0517 kg
30-2435-Black	30				Black Anodize	.0517 kg
40-2435	40				Clear Anodize	.1565 kg
40-2435-Black	40				Black Anodize	.1565 kg
45-2435	45				Clear Anodize	.1918 kg
45-2435-Black	45				Black Anodize	.1918 kg

* Or comparable

Suggested Hardware (Mount to T-Slot)

Part No.	Series	Qty.	Bolt	T-Nut
3321	10	2	1/4-20 x 1/2 FBHSCS	Economy
3320	15	2	5/16-18 x 11/16 FBHSCS	Economy
75-3581	20	2	M5 x 8mm BHSCS	Economy
75-3404	25	2	M6 x 10mm BHSCS	Economy
75-3615	30	2	M8 x 12mm BHSCS	Roll-in
75-3422	40	2	M8 x 16mm BHSCS	Economy
75-3619	45	2	M8 x 18mm BHSCS	Drop-in

Suggested Hardware (Mount to Backing Plate)

Part No.	Series	Qty.	Bolt
3063	10	2	1/4-20 x 1/2 BHSCS
3114	15	2	5/16-18 x 11/16 BHSCS
11-5310	20	2	M5 x 10mm BHSCS
13-6312	25	2	M6 x 12mm BHSCS
11-8316	30	2	M8 x 16mm BHSCS
13-8320	40	2	M8 x 20mm BHSCS
11-8318	45	2	M8 x 18mm BHSCS

Double Arm Narrow Mesh Retainer with Narrow Backing Plates

Part Description:

The double arm narrow mesh retainer with narrow backing plates consists of one double arm narrow mesh retainer (page 494) and two narrow backing plates (page 498). The hardware to attach the backing plates to the retainer should be selected based on the wire mesh panel type and thickness. The suggested hardware to mount the retainer to the T-slot can be found below.

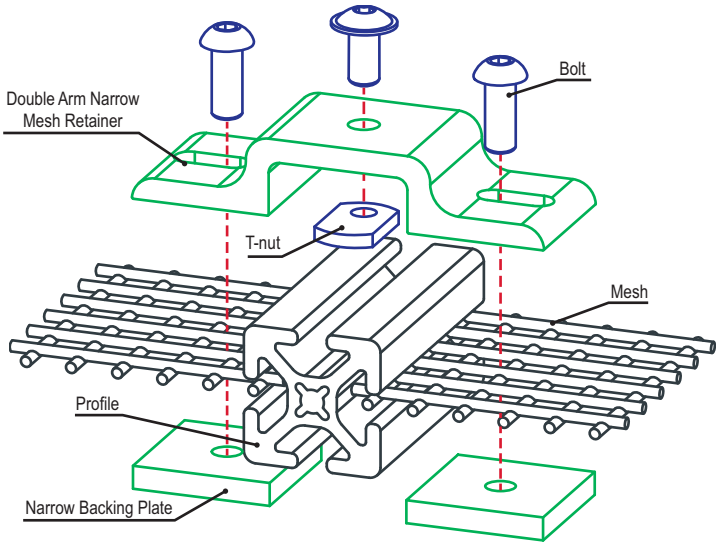

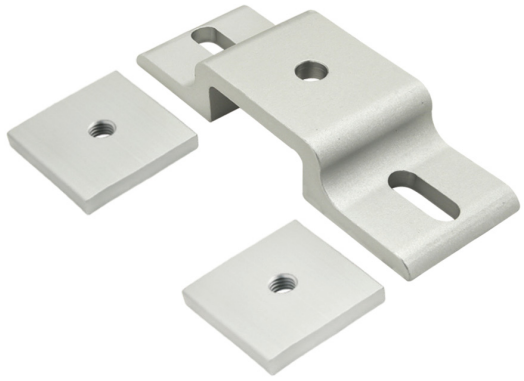

Part No.	Series	Material	Alloy*	Process	Finish	Weight
2522	10	Aluminum	6105-T5	Milled	Clear Anodize	.077 lb
2522-Black	10				Black Anodize	.077 lb
2518	15				Clear Anodize	.240 lb
2518-Black	15				Black Anodize	.240lb
25-2522	25				Clear Anodize	.0448 kg
25-2522-Black	25				Black Anodize	.0448 kg
40-2518	40				Clear Anodize	.1398 kg
40-2518-Black	40				Black Anodize	.1398 kg

* Or comparable

Suggested Hardware (Mount to T-Slot)

Part No.	Series	Qty.	Bolt	T-Nut
3321	10	1	1/4-20 x 1/2 FBHSCS	Economy
3320	15	1	5/16-18 x 11/16 FBHSCS	Economy
75-3404	25	1	M6 x 10mm BHSCS	Economy
75-3422	40	1	M8 x 16mm BHSCS	Economy

Suggested Hardware (Mount to Backing Plate)

Part No.	Series	Qty.	Bolt
3063	10	2	1/4-20 x 1/2 BHSCS
3114	15	2	5/16-18 x 11/16 BHSCS
13-6312	25	2	M6 x 12mm BHSCS
13-8320	40	2	M8 x 20mm BHSCS

Double Arm Wide Mesh Retainer with Wide Backing Plates

Part Description:

The double arm wide mesh retainer with wide backing plates consists of one double arm wide mesh retainer (page 496) and two wide backing plates (page 499). The hardware to attach the backing plates to the retainer should be selected based on the wire mesh panel type and thickness. The suggested hardware to mount the retainer to the T-slot can be found below.

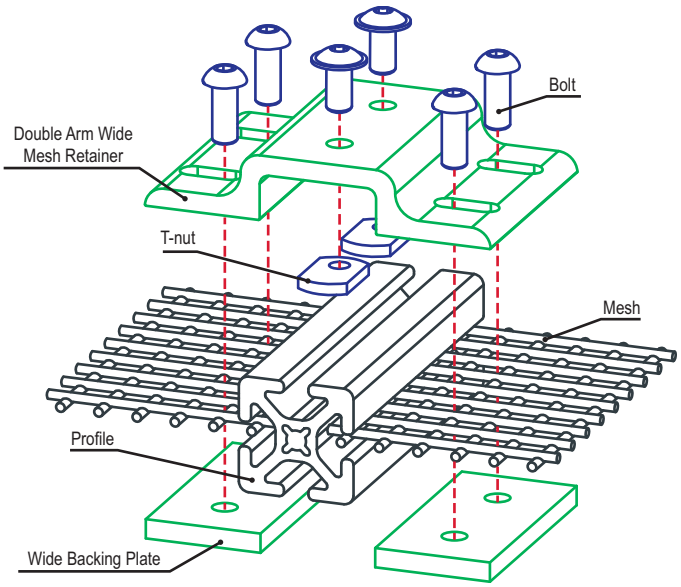

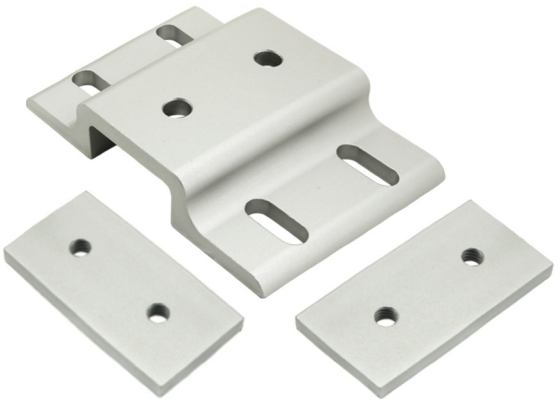

Part No.	Series	Material	Alloy*	Process	Finish	Weight
2524	10	Aluminum	6105-T5	Milled	Clear Anodize	.157 lb
2524-Black	10				Black Anodize	.157 lb
2520	15				Clear Anodize	.482 lb
2520-Black	15				Black Anodize	.482 lb
25-2524	25				Clear Anodize	.1157 kg
25-2524-Black	25				Black Anodize	.1157 kg
40-2520	40				Clear Anodize	.2807 kg
40-2520-Black	40				Black Anodize	.2807 kg

* Or comparable

Suggested Hardware (Mount to T-Slot)

Part No.	Series	Qty.	Bolt	T-Nut
3321	10	2	1/4-20 x 1/2 FBHSCS	Economy
3320	15	2	5/16-18 x 11/16 FBHSCS	Economy
75-3404	25	2	M6 x 10mm BHSCS	Economy
75-3422	40	2	M8 x 16mm BHSCS	Economy

Suggested Hardware (Mount to Backing Plate)

Part No.	Series	Qty.	Bolt
3063	10	4	1/4-20 x 1/2 BHSCS
3114	15	4	5/16-18 x 11/16 BHSCS
13-6312	25	4	M6 x 12mm BHSCS
13-8320	40	4	M8 x 20mm BHSCS

Single & Dual Panel Holder

Part Description:

The single and dual panel holders are both zinc die-cast and provide quick and simple methods to secure panels. The pads on the holders increase the strength and help to protect the panel. The dual panel holder is frequently used in conjunction with two single panel holders to form a frameless plastic panel corner. The single panel holder is comprised of two pieces and the hardware to connect them. The dual panel holder includes the hardware to mount to the single panel holders.

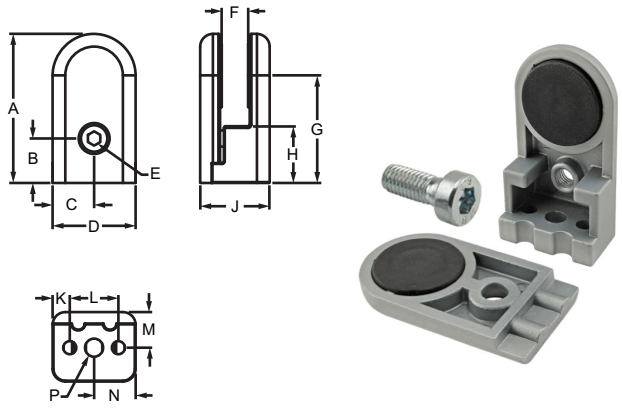

Single Panel Holder

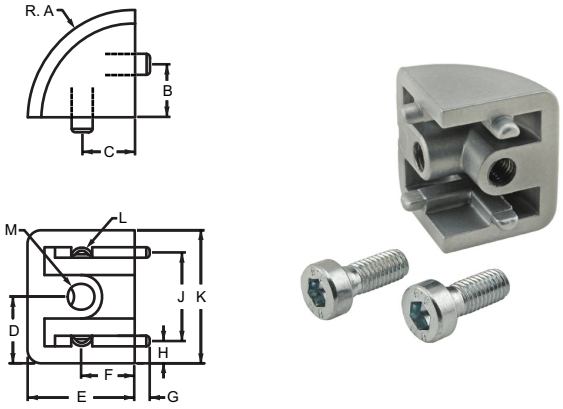

Dual Panel Holder

Part No.	Series	Type	A	B	C	D	E	F	G	H	J	K	L	M	N	P
4490	10 15	Single Panel	1.785"	.525"	.489	.978"	M4 hex	.350"	1.270"	.660"	.820"	.203"	.575"	.420"	.490"	5.00mm
65-4490	25 40	Single Panel	45.34mm	13.34mm	12.42mm	24.84mm	M4 hex	8.89mm	32.26mm	16.76mm	20.83mm	12.45mm	24.89mm	10.67mm	12.45mm	5.00mm
65-4491	25 40	Dual Panel	20.07mm	9.90mm	9.90mm	12.45mm	20.06mm	10.03mm	2.79mm	4.17mm	16.58mm	24.89mm	19.81mm	M5 tap	—	—

Material Specifications

Part No.	Material	Process	Finish	Weight
4490	Die Cast Zinc	Die Casting	Powder Coat	.169 lbs
65-4490				
4491				.085 lbs
65-4491				

Suggested Hardware (Mount Clamp to T-Slot)

Series	Part No.	Qty.	Bolt	Part No.	Qty.	T-Nut
10	3050	1	10-32 x 1/2" BHSCS	3205	1	10-32 Standard
15	3051	1	10-32 x 5/8" BHSCS	3201	1	10-32 Standard
25	11-5312	1	M5 x 12mm BHSCS	25-1954	1	M5 Standard
40	11-5314	1	M5 x 14mm BHSCS	13116	1	M5 Drop-in

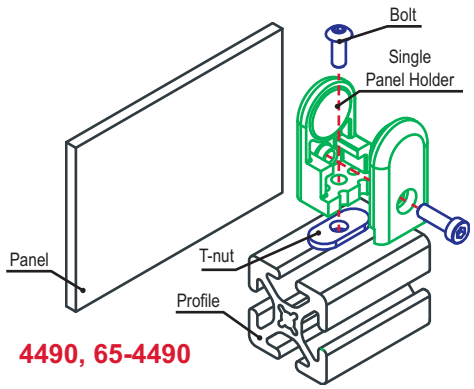

4490, 65-4490

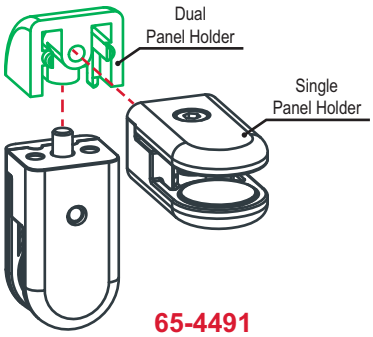

65-4491

Part Description:

The snap on panel retainer snaps over the outside of square Quick Frame® and 1010 profiles to hold .250" panels securely. It is commonly used in shelving and guarding applications. It comes in a stock length of 72.5 inches.

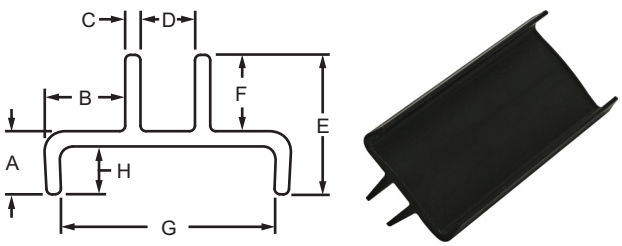

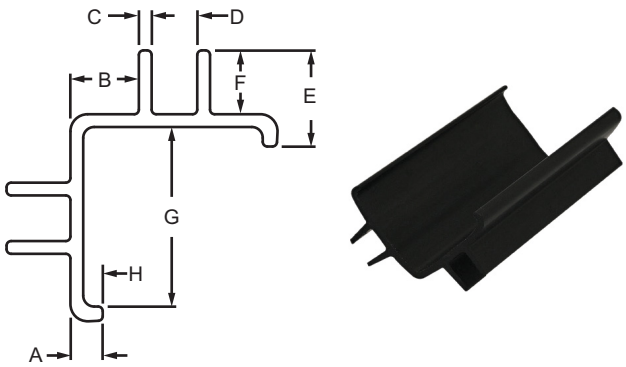

9355 **9356**

Part No.	Series	A	B	C	D	E	F	G	H	Weight
9355	10 QF	.290"	.370"	.070"	.250"	.640"	.350"	.980"	.220"	.540 lb
9356	QF	.177"	.370"	.070"	.250"	.527"	.350"	.984"	.107"	.868 lb

Material Specifications

Material	Process	Finish	Color
Plastic	Extruded	Matte	Black

Single Panel

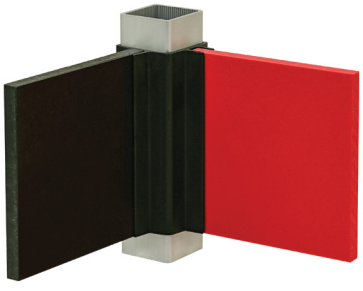

Double Panel

Roll-in Mesh Panel Retainer

Part Description:

The roll-in mesh panel retainer is used to mount a mesh panel when it is recessed within the T-slot. It rolls into the T-slot channel and can be used when the profile ends are closed, making assembly fast and easy. The self-threading screw is included and no machining services are required. **Important:** This retainer is not intended for use with expanded metal panels.

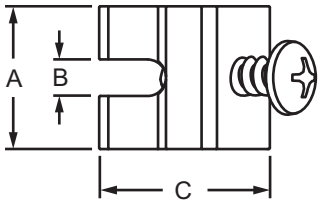

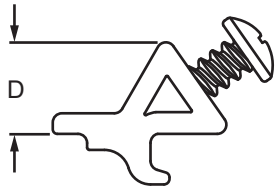

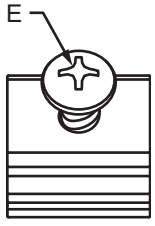

Part No.	Series	Material	Process	Color	A	B	C	D	E	Weight
2442	15 40	Nylon PA Glass Fiber Reinforced	Molded	Black	.625"	.150"	.758"	.400"	No. 2 Phillips	.006 lb

1

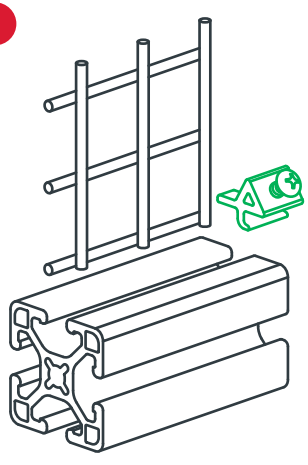

2

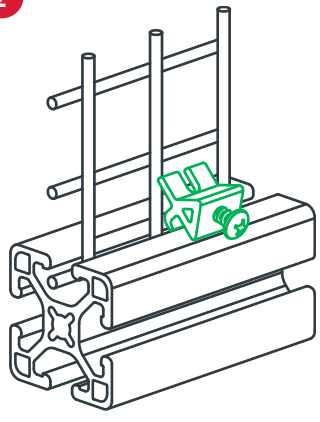

3

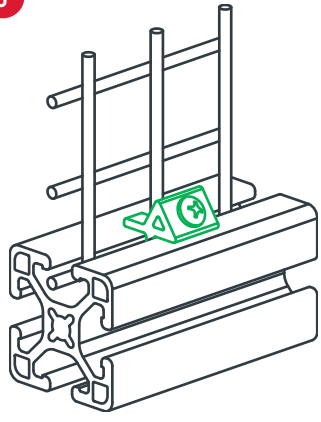

Part Description:

The straddle mesh retainer is typically used with Quick Frame® profiles to secure 1.00” x 1.00” mesh panels. It straddles the wire and fastens to a square tube with self-tapping or self-drilling screws. There are options available in aluminum or gray plastic.

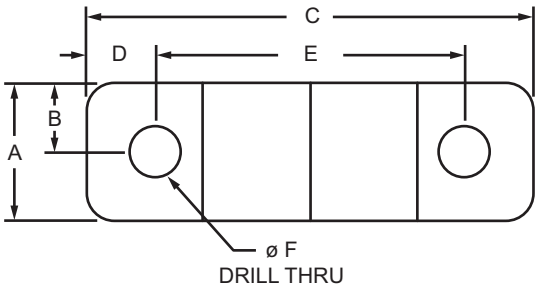

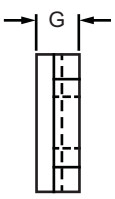

Part No.	Series	Material	Process	Finish	A	B	C	D	E	F	G	Weight
9300	QF	Aluminum	Machined	Mill Finish	.500”	.250”	1.750”	.313”	1.125”	.188”	.156”	.007 lb
9310	QF	Plastic	Molded	Matte Gray	.500”	.250”	1.625”	.250”	1.125”	.188”	.156”	.002 lb

Suggested Hardware (Mount to QF Profile)

Part No.	Series	Qty.	Bolt
9301	QF	2	#8 x 5/8” Self Tapping Screw
9302	QF	2	#8 x .675” Self Drilling Screw

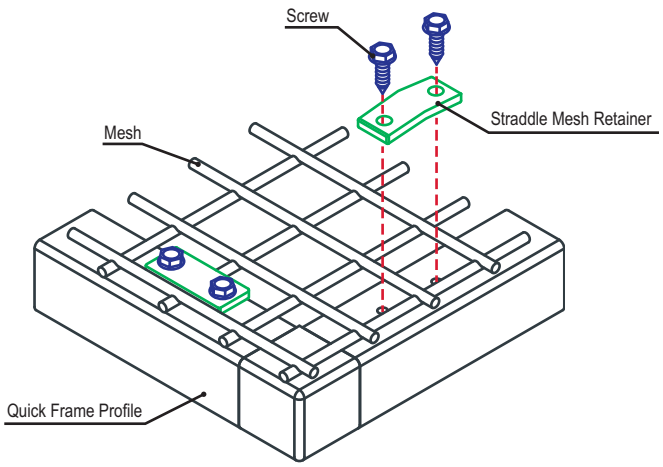

Wire Mesh Fastener

Part Description:

The wire mesh fastener is typically used with Quick Frame® profiles to secure .500" x .500" mesh panels. It is made of gray nylon and fastens to a square tube with self-tapping or self-drilling screws. See below for suggested hardware.

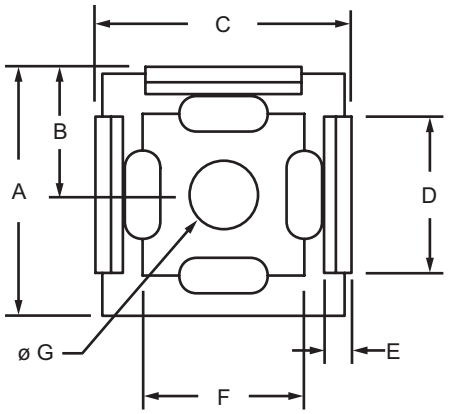

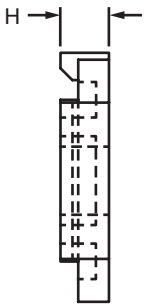

Part No.	Series	A	B	C	D	E	F	G	H	Weight
9305	QF	.632"	.325"	.649"	.396"	.070"	.410"	.172"	.123"	.001 lb

Material Specifications

Material	Process	Finish	Color
Nylon	Molded	Matte	Gray

Suggested Hardware (Mount to QF Profile)

Part No.	Series	Qty.	Bolt
9301	QF	1	#8 x 5/8" Self Tapping Screw
9302	QF	1	#8 x 5/8" Self Drilling Screw

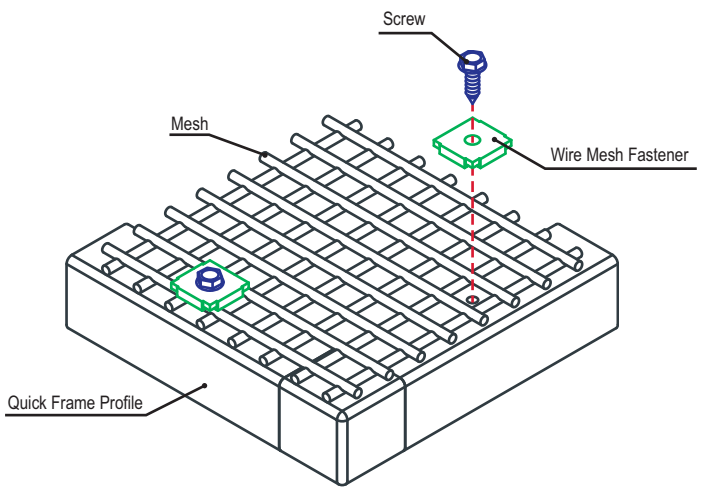

Part Description:

The economy sliding door glide is a cost-effective option that is used in access points to help profiles glide along the T-slot. It bolts onto the profile end and freely rotates as the door pivots. The economy sliding door glide is made of UHMW polyethylene and requires no lubrication. A stainless steel mounting screw is included. See page 528 for bi-fold door information.

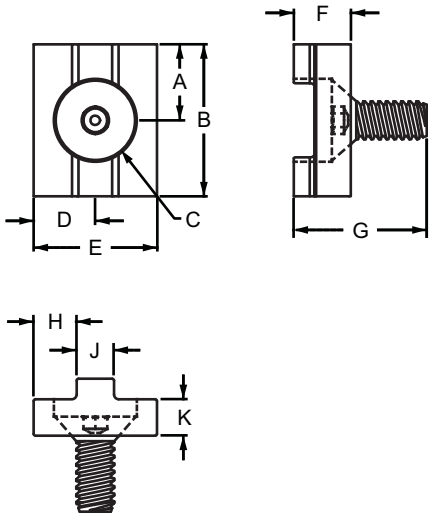

Part No.	Series	Pad Color	A	B	C	D	E	F	G	H	J	K	Weight
2067	10	Natural	.500"	1.000"	1/4-20 x .625	.406"	.812"	.375"	.875"	.283"	.246"	.240"	.009 lb
2068	15		.750"	1.500"	5/16-18 x .625	.625"	1.25"	.375"	.875"	.469"	.312"	.240"	.016 lb
25-2067	25	Black	12.50mm	25.00mm	M6-1.0 x 16mm	10.31mm	20.62mm	9.50mm	19.67mm	7.20mm	6.22mm	6.10mm	.0066 kg
40-2068	40		20.00mm	40.00mm	M8-1.25 x 16mm	15.88mm	31.75mm	9.53mm	22.35mm	7.92mm	11.91mm	6.10mm	.0142 kg

Material Specifications

Material	Grade	Process
UHMW	Virgin	Extruded

Required Machining Services

Machining Type	Machined	Reference Page
End Tap	Mounting Profile	861

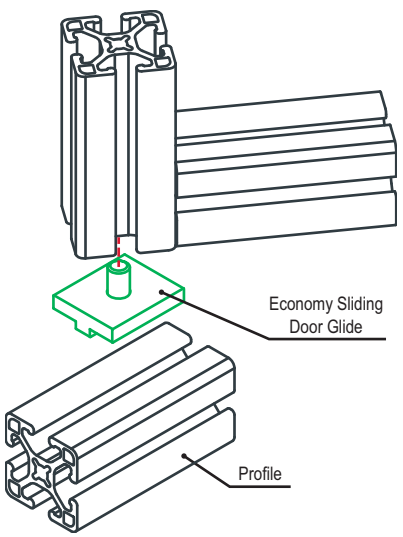

Standard Sliding Door Glide

Part Description:

The standard sliding door glide has a pad key that slides into a T-slot; it is commonly used to create a top rail sliding or bi-fold door. The standard sliding door glide bolts onto the profile end and freely rotates as the door pivots. It is made of UHMW polyethylene and requires no lubrication. A mounting screw is included. For information on machining services see page 861.

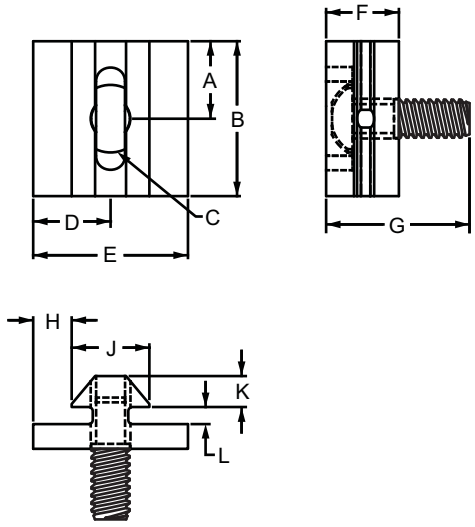

Part No.	Series	A	B	C	D	E	F	G	H	J	K	L	Weight
2059	10	.500"	1.000"	1/4-20	.500"	1.000"	.470"	.920"	.250"	.500"	.200"	.110"	.016 lb
2051	15	.750"	1.500"	5/16-18	.750"	1.500"	.700"	1.710"	.365"	.770"	.265"	.195"	.054 lb
25-2059*	25	12.70mm	25.40mm	1/4-20*	12.70mm	25.40mm	11.94mm	23.37mm	6.35mm	12.70mm	5.08mm	2.79mm	.0075 kg
40-2051**	40	19.05mm	38.10mm	5/16-18**	19.05mm	38.10mm	17.78mm	43.43mm	9.27mm	19.56mm	6.73mm	4.95mm	.0200 kg

* Important: The included 1/4-20 screw requires the corresponding metric end tap.
** Important: The included 5/16-18 screw requires the corresponding metric end tap.

Material Specifications

Material	Grade	Finish	Process
UHMW	Virgin	Natural	Extruded

Required Machining Services

Machining Type	Machined	Reference Page
End Tap	Mounting Profile	861

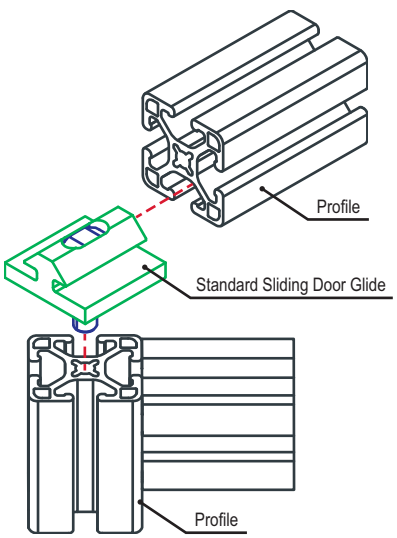

Standard Sliding Door Glide Profile

Part Description:

The standard sliding door glide profile has a pad key that slides into a T-slot; it is commonly used to create a top rail sliding or bi-fold door. It is ideal when used with the economy sliding door glide as a bottom mount. The standard sliding door glide bolts onto the profile end and freely rotates as the door pivots. It is made of UHMW polyethylene and requires no lubrication. The standard length of the glide profile is 145" (3.683M) or can be cut to length as a standard machining service (page 860).

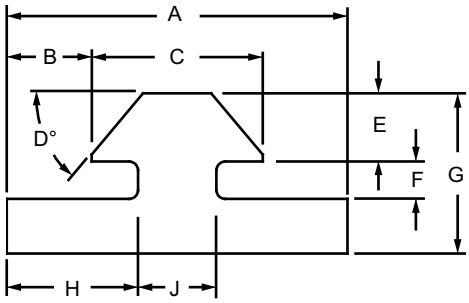

Part No.	Series	A	B	C	D	E	F	G	H	J	Length	Weight
6710	10	1.000"	.250"	.500"	50°	.200"	.110"	.470"	.385"	.230"	per inch	.008 lb / in.
6710-120	10	1.000"	.250"	.500"	50°	.200"	.110"	.470"	.385"	.230"	120.00"	1.020 lb
6710-145	10	1.000"	.250"	.500"	50°	.200"	.110"	.470"	.385"	.230"	145.00"	1.232 lb
6808	15	1.500"	.365"	.770"	45°	.265"	.195"	.700"	.600"	.300"	per inch	.018 lb / in.
6808-145	15	1.500"	.365"	.770"	45°	.265"	.195"	.700"	.600"	.300"	145.00"	2.711 lb
25-6710	25	25.40mm	6.35mm	12.70mm	50°	5.08mm	2.79mm	11.94mm	9.78mm	5.84mm	per millimeter	.0038 kg / mm
40-6808	40	38.10mm	9.27mm	19.56mm	45°	6.73mm	4.95mm	17.78mm	15.24mm	7.62mm	per millimeter	.0084 kg / mm
40-6808-3.683M	40	38.10mm	9.27mm	19.56mm	45°	6.73mm	4.95mm	17.78mm	15.24mm	7.62mm	3683.00mm	1.1698 kg

Material Specifications

Material	Grade	Finish	Process
UHMW	Virgin	Natural	Extruded

Required Machining Services

Machining Type	Machined	Reference Page
Cut to Length	Door Glide Profile	860

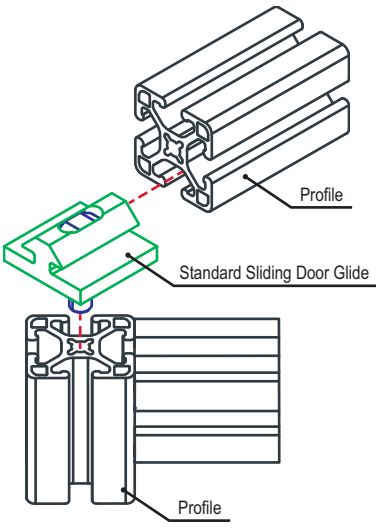

Upper & Lower Door Slide Track

Part Description:

The upper and lower door slide tracks snap into a T-slot with no required hardware. These tracks are used together to allow panels to be inserted after the frame is assembled. The lower slide track has a radius bearing surface that allows panels to slide easily. Both the upper and lower door slide tracks are 145" (3.683M) or can be cut to length with a standard machining service (page 860).

2211

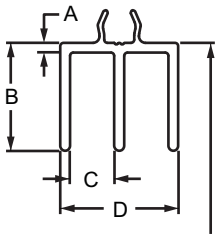

For panel height subtract .500" from overall height

2210

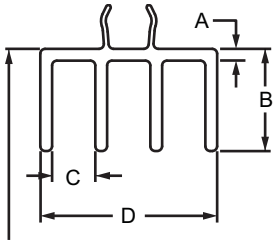

For panel height subtract .500" from overall height

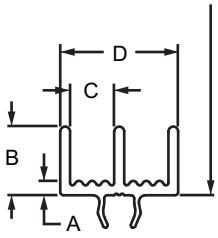

2221

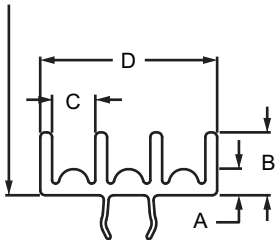

2220

Upper Door Slide Track

Part No.	Series	Material	Alloy*	Process	Finish	A	B	C	D	Length	Weight
2211	10	Aluminum	6105-T5	Extruded	Clear Anodize	.062"	.688"	.281"	.750"	per inch	.016 lb / in.
2211-48	10				Clear Anodize	.062"	.688"	.281"	.750"	48.000"	.778 lb
2211-145	10				Clear Anodize	.062"	.688"	.281"	.750"	145.000"	2.351 lb
2211-Black	10				Black Anodize	.062"	.688"	.281"	.750"	per inch	.016 lb / in.
2210	15				Clear Anodize	.075"	.650"	.275"	1.125"	per inch	.025 lb / in.
2210-48	15				Clear Anodize	.075"	.650"	.275"	1.125"	48.000"	1.217 lb
2210-145	15				Clear Anodize	.075"	.650"	.275"	1.125"	145.000"	3.677 lb
2210-Black	15				Black Anodize	.075"	.650"	.275"	1.125"	per inch	.025 lb / in.
25-2211	25				Clear Anodize	1.57mm	17.48mm	7.14mm	19.05mm	per millimeter	.0073 kg / mm
25-2211-3.68M	25				Clear Anodize	1.57mm	17.48mm	7.14mm	19.05mm	3.68M	1.0663 kg
25-2211-Black	25				Black Anodize	1.57mm	17.48mm	7.14mm	19.05mm	per millimeter	.0073 kg / mm
40-2210	40				Clear Anodize	1.91mm	16.51mm	6.99mm	28.58mm	per millimeter	.0115 kg / mm
40-2210-3.68M	40				Clear Anodize	1.91mm	16.51mm	6.99mm	28.58mm	3.68M	1.6678 kg
40-2210-Black	40				Black Anodize	1.91mm	16.51mm	6.99mm	28.58mm	per millimeter	.0115 kg / mm

* Or comparable

CONTINUE

Lower Door Slide Track

Part No.	Series	Material	Alloy*	Process	Finish	A	B	C	D	Length	Weight
2221	10	Aluminum	6105-T5	Extruded	Clear Anodize	.092"	.438"	.281"	.750"	per inch	.012 lb / in.
2221-48	10				Clear Anodize	.092"	.438"	.281"	.750"	48.000"	.607 lb
2221-145	10				Clear Anodize	.092"	.438"	.281"	.750"	145.000"	1.833 lb
2221-Black	10				Black Anodize	.092"	.438"	.281"	.750"	per inch	.012 lb / in.
2220	15				Clear Anodize	.169"	.400"	.275"	1.125"	per inch	.022 lb / in.
2220-48	15				Clear Anodize	.169"	.400"	.275"	1.125"	48.000"	1.083 lb
2220-145	15				Clear Anodize	.169"	.400"	.275"	1.125"	145.000"	3.273 lb.
2220-Black	15				Black Anodize	.169"	.400"	.275"	1.125"	per inch	.0226 lb / in.
25-2221	25				Clear Anodize	2.34mm	11.13mm	7.14mm	19.05mm	per millimeter	.0057 kg / mm
25-2221-3.68M	25				Clear Anodize	2.34mm	11.13mm	7.14mm	19.05mm	3.68M	.8314 kg
25-2221-Black	25				Black Anodize	2.34mm	11.13mm	7.14mm	19.05mm	per millimeter	.0057 kg / mm
40-2220	40				Clear Anodize	4.29mm	10.16mm	6.99mm	28.58mm	per millimeter	.3969 kg / mm
40-2220-3.68M	40				Clear Anodize	4.29mm	10.16mm	6.99mm	28.58mm	3.68M	1.4846 kg
40-2220-Black	40				Black Anodize	4.29mm	10.16mm	6.99mm	28.58mm	per millimeter	.3969 kg / mm

* Or comparable

Required Machining Services

Machining Type	Machined	Reference Page
Cut to Length	Door Track Profile	860

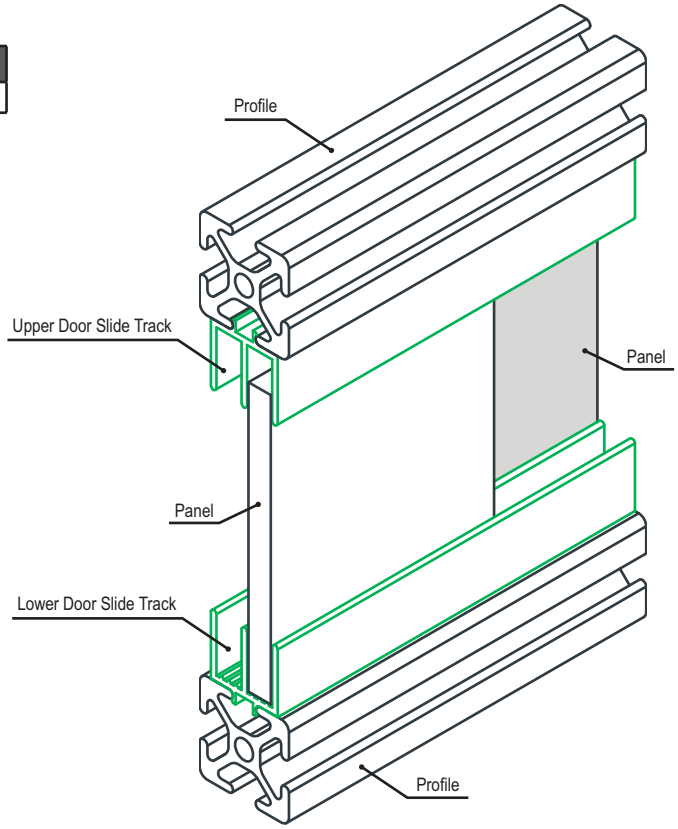

Roller Wheel with Ball Bearing Hub

The roller wheel with ball bearing hub is made of nylon and is reinforced with fiberglass. The ball bearing creates a smooth glide and is used to move frames, panels and components by rolling in the profile T-slot.

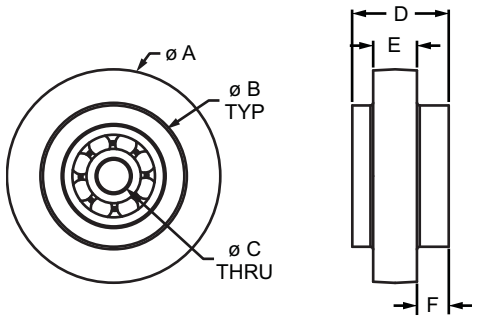

Part No.	Series	Material	Grade	Color	Process	A	B	C	D	E	F	Weight
12017	15 40	Nylon PA Glass Fiber Reinforced	PA6GK20	Black	Injection Molding	39.00mm	25.80mm	6.00mm	17.60mm	8.00mm	5.80mm	.0292 kg
12018	15 40					39.00mm	25.80mm	6.00mm	17.60mm	10.00mm	3.80mm	.0302 kg
12020	15 40					47.00mm	33.60mm	8.00mm	19.40mm	7.80mm	5.80mm	.0462 kg
12021	45					48.00mm	33.60mm	8.00mm	19.50mm	9.90mm	4.80mm	.0498 kg

Roller Wheel with Steel Hub

The roller wheel with steel hub is made of nylon and is reinforced with fiberglass. The steel hub creates a smooth glide and is used to move frames, panels and components by rolling in the profile T-slot.

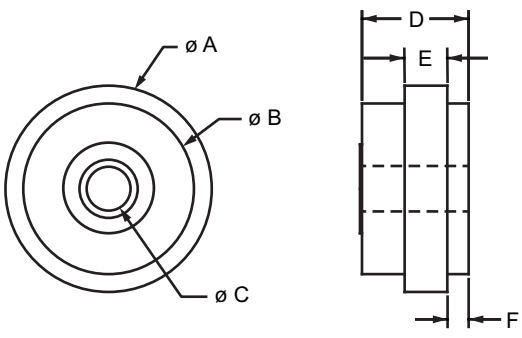

Part No.	Series	Material	Grade	Color	Process	A	B	C	D	E	F	Weight
12024	10 25	Nylon PA Glass Fiber Reinforced	PA6GK20	Black	Injection Molding	29.00mm	24.00mm	6.20mm	15.00mm	6.00mm	3.00mm	.036 lb

CONTINUE

Reinforced Roller Wheel

The roller wheel is made of nylon and is reinforced with fiberglass. The steel hub creates a smooth glide and it is used to move frames, panels and components by rolling in the profile T-slot. The mounting hardware is included.

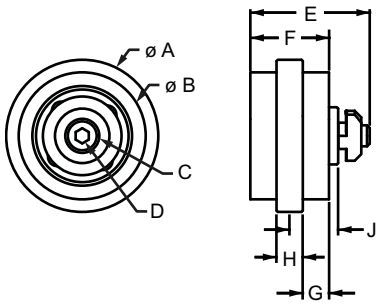

Part No.	Series	Material	Grade	Color	Process	A	B	C	D	E	F	G	H	J	Weight
12022	45	Nylon PA Glass Fiber Reinforced	PA6GK20	Black	Injection Molding	58.00mm	48.40mm	M8 x 45.00mm	M6	45.50mm	30.00mm	9.50mm	10.00mm	18.50mm	.1543 kg

Roller Wheel with Permanent Lubricated Bushing

The roller wheel with permanent lubricated bushing is ideal for guided linear motion and has a bronze bushing that requires no additional lubrication. The roller wheel mounts to the profile end or T-slot and includes the mounting hardware.

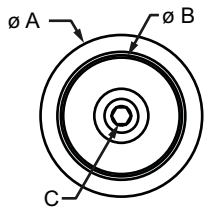

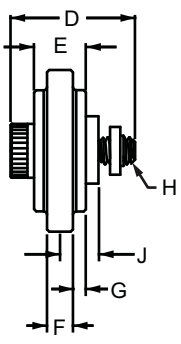

Fractional

Metric

Part No.	Series	Material	Grade	Color	Process	A	B	C	D	E	F	G	H	J	Weight
2281	10 to 10	Nylon PA Glass Fiber Reinforced	K222-D	Black	Injection Molding	1.500"	1.125"	5/32	1.156"	.480"	.240"	.120"	1/4-20	.365"	.067 lb
2282	10 to 15					1.500"	1.125"	5/32	1.156"	.480"	.310"	.085"	1/4-20	.365"	.070 lb
2290	15 to 15					2.000"	1.625"	3/16	1.500"	.720"	.312"	.204"	5/16-18	.485"	.158 lb
25-2281	25 to 25			Blue		37.50mm	28.00mm	4.00mm	28.41mm	11.60mm	6.10mm	2.74mm	M6 x 1.0	8.97mm	.0318 kg
65-2282	25 to 40					37.50mm	28.00mm	4.00mm	28.41mm	11.60mm	7.90Mm	1.85mm	M6 x 1.0	8.97mm	.0621 kg
40-2290	40 to 40					54.00mm	43.00mm	5.00mm	40.25mm	19.50mm	7.90mm	5.80mm	M8 x 1.25	12.92mm	.0849 kg

CONTINUE

Roller Wheel with Dual Roller Bearing

The roller wheel with dual roller bearing is made of nylon and is reinforced with fiberglass. The ball bearing creates a smooth glide and is used to move frames, panels and components by rolling in the profile T-slot. The mounting hardware is included.

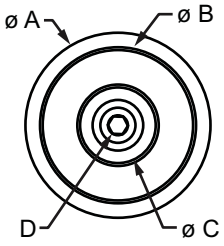

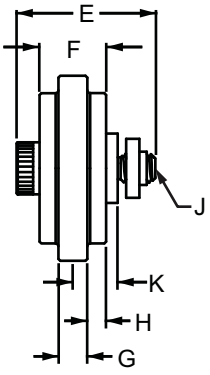

Fractional

Metric

Part No.	Series	A	B	C	D	E	F	G	H	J	K	Weight
2280	15 to 15	2.000"	1.625"	.875"	3/16	1.495"	.720"	.312"	.204"	5/16-18	.485"	.181 lb
40-2280	40 to 40	54.00mm	43.00mm	26.00mm	5mm	40.25mm	19.48mm	7.90mm	5.79mm	M8 x 1.25	13.43mm	.1041 kg

Material Specifications

Part No.	Material	Grade	Color	Process
2280	Nylon PA Glass Fiber Reinforced	K222-D	Black	Injection Molding
40-2280			Blue	

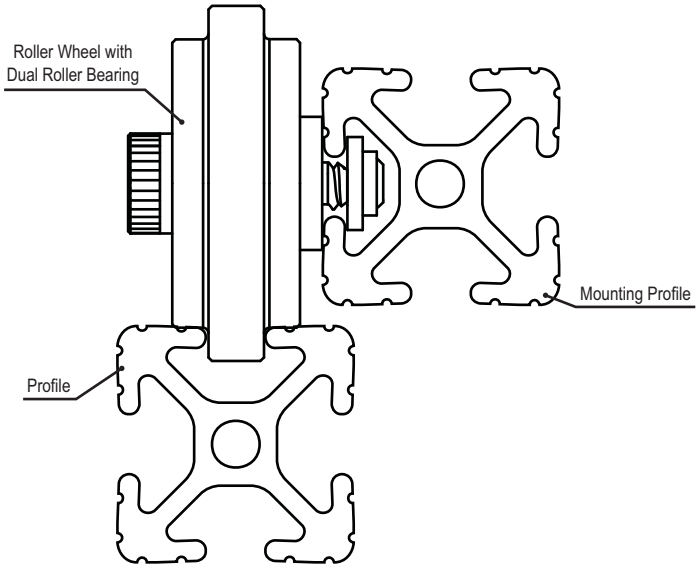

Dual Roller Wheel Bracket

Part Description:

The dual roller wheel bracket is made of anodized aluminum and mounts to a T-slot profile. It is used with roller wheels to form assemblies that create door frames, linear glides, and track systems. The mounting hardware is included.

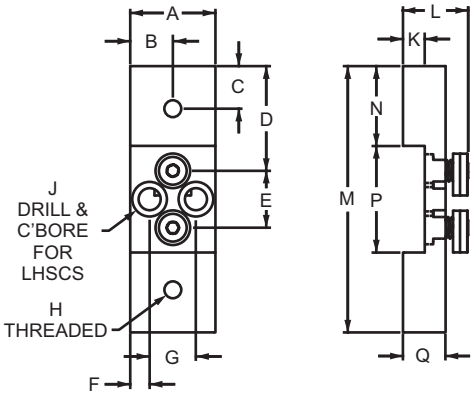

Part No.	Series	A	B	C	D	E	F	G	H	J	K	L	M	N	P	Q
2750	10	1.000"	.500"	.500"	1.228"	.669"	.228"	.544"	1/4-20	1/4-20	.255"	.765"	3.125"	.938"	1.250"	.500"
2750-Black	10	1.000"	.500"	.500"	1.228"	.669"	.228"	.544"	1/4-20	1/4-20	.255"	.765"	3.125"	.938"	1.250"	.500"
2752	10	1.000"	.500"	.500"	1.563"	1.000"	.228"	.544"	1/4-20	1/4-20	.255"	.765"	4.125"	.938"	2.250"	.500"
2752-Black	10	1.000"	.500"	.500"	1.563"	1.000"	.228"	.544"	1/4-20	1/4-20	.255"	.765"	4.125"	.938"	2.250"	.500"
2754	15	1.500"	.750"	.750"	1.883"	.860"	.383"	.735"	5/16-18	5/16-18	.390"	1.181"	4.625"	1.438"	1.750"	.750"
2754-Black	15	1.500"	.750"	.750"	1.883"	.860"	.383"	.735"	5/16-18	5/16-18	.390"	1.181"	4.625"	1.438"	1.750"	.750"
2757	15	1.500"	.750"	.750"	2.313"	1.500"	.382"	.735"	5/16-18	5/16-18	.390"	1.181"	6.125"	1.438"	3.250"	.750"
2757-Black	15	1.500"	.750"	.750"	2.313"	1.500"	.382"	.735"	5/16-18	5/16-18	.390"	1.181"	6.125"	1.438"	3.250"	.750"
25-2750	25	25.40mm	12.70mm	12.70mm	47.50mm	17.00mm	5.81mm	13.81mm	M6 x 1.0	M6 x 1.0	6.40mm	20.42mm	78.00mm	23.44mm	31.10mm	12.70mm
25-2750-Black	25	25.40mm	12.70mm	12.70mm	47.50mm	17.00mm	5.81mm	13.81mm	M6 x 1.0	M6 x 1.0	6.40mm	20.42mm	78.00mm	23.44mm	31.10mm	12.70mm
25-2752	25	25.40mm	12.70mm	12.70mm	38.80mm	25.40mm	5.81mm	13.81mm	M6 x 1.0	M6 x 1.0	6.40mm	20.42mm	103.00mm	23.44mm	56.10mm	12.70mm
25-2752-Black	25	25.40mm	12.70mm	12.70mm	38.80mm	25.40mm	5.81mm	13.81mm	M6 x 1.0	M6 x 1.0	6.40mm	20.42mm	103.00mm	23.44mm	56.10mm	12.70mm
40-2754	40	40.00mm	20.00mm	20.00mm	49.65mm	24.00mm	10.00mm	20.00mm	M8 x 1.25	M8 x 1.25	10.20mm	25.20mm	123.30mm	38.30mm	46.70mm	19.00mm
40-2754-Black	40	40.00mm	20.00mm	20.00mm	49.65mm	24.00mm	10.00mm	20.00mm	M8 x 1.25	M8 x 1.25	10.20mm	25.20mm	123.30mm	38.30mm	46.70mm	19.00mm
40-2757	40	40.00mm	20.00mm	20.00mm	61.65mm	40.00mm	10.00mm	20.00mm	M8 x 1.25	M8 x 1.25	10.20mm	31.20mm	163.30mm	38.30mm	86.70mm	19.00mm
40-2757-Black	40	40.00mm	20.00mm	20.00mm	61.65mm	40.00mm	10.00mm	20.00mm	M8 x 1.25	M8 x 1.25	10.20mm	31.20mm	163.30mm	38.30mm	86.70mm	19.00mm

Material Specifications	2750	2750-Black	2752	2752-Black	2754	2754-Black	2757	2757-Black	25-2750	25-2750-Black	25-2752	25-2752-Black	40-2754	40-2754-Black	40-2757	40-2757-Black
Weight	.138 lb		.162 lb		.458 lb		.534 lb		.0615 kg		.0715 kg		.2218 kg		.2608 kg	
Color	Clear	Black	Clear	Black	Clear	Black	Clear	Black	Clear	Black	Clear	Black	Clear	Black	Clear	Black
Material	Aluminum															
Alloy*	6105-T5															
Finish	Anodize															
Process	Milled															

* Or comparable

Dual Roller Wheel Bracket Assembly

Part Description:

The dual roller wheel bracket assembly mounts to a T-slot profile and includes one dual roller wheel bracket (page 517) and two roller wheels with permanent lubricated bushings or ball bearings (pages 515-516). The assembly is commonly used to create door frames, linear glides, or track systems. The mounting hardware is included.

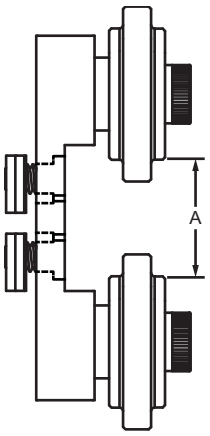

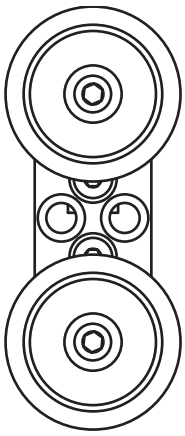

Fractional

Metric

		Assembly Components		Included Hardware							
Part No.	Series	Bracket (Qty)	Wheel (Qty)	Bolt (Qty)	T-Nut (Qty)	Material	Process	Wheel Color	Bracket Color	A	Weight
2751	10	2750 (1)	2281 (2)	275001 (2)	3204 (2)	Nylon PA Glass Fiber Reinforced K222-D	Injection Molding	Black	Clear Anodize	1.000"	.253 lb
2751-Black	10	2750 (1)	2281 (2)						Black Anodize	1.000"	.253 lb
2753	10	2752 (1)	2281 (2)						Clear Anodize	2.000"	.277 lb
2753-Black	10	2752 (1)	2281 (2)						Black Anodize	2.000"	.277 lb
2755	15	2754 (1)	2280 (2)	275401 (2)	3203 (2)				Clear Anodize	1.500"	.777 lb
2755-Black	15	2754 (1)	2280 (2)						Black Anodize	1.500"	.777 lb
2758	15	2757 (1)	2280 (2)						Clear Anodize	3.000"	.855 lb
2758-Black	15	2757 (1)	2280 (2)						Black Anodize	3.000"	.855 lb
2756	15	2754 (1)	2290 (2)						Clear Anodize	1.500"	.735 lb
2756-Black	15	2754 (1)	2290 (2)						Black Anodize	1.500"	.735 lb
2759	15	2757 (1)	2290 (2)						Clear Anodize	3.000"	.813 lb
2759-Black	15	2757 (1)	2290 (2)						Black Anodize	3.000"	.813 lb
25-2751	25	25-2750 (1)	25-2281 (2)	13-1993 (2)	3873 (2)			Blue	Clear Anodize	25.00mm	.1107 kg
25-2751-Black	25	25-2750 (1)	25-2281 (2)						Black Anodize	25.00mm	.1107 kg
25-2753	25	25-2752 (1)	25-2281 (2)						Clear Anodize	50.00mm	.1274 kg
25-2753-Black	25	25-2752 (1)	25-2281 (2)						Black Anodize	50.00mm	.1274 kg
40-2755	40	40-2754 (1)	40-2280 (2)	13-1957 (2)	3868 (2)				Clear Anodize	40.00mm	.4129 kg
40-2755-Black	40	40-2754 (1)	40-2280 (2)						Black Anodize	40.00mm	.4129 kg
40-2758	40	40-2757 (1)	40-2280 (2)						Clear Anodize	80.00mm	.4519 kg
40-2758-Black	40	40-2757 (1)	40-2280 (2)						Black Anodize	80.00mm	.4519 kg
40-2756	40	40-2754 (1)	40-2290 (2)						Clear Anodize	40.00mm	.3747 kg
40-2756-Black	40	40-2754 (1)	40-2290 (2)						Black Anodize	40.00mm	.3747 kg
40-2759	40	40-2757 (1)	40-2290 (2)						Clear Anodize	80.00mm	.4122 kg
40-2759-Black	40	40-2757 (1)	40-2290 (2)						Black Anodize	80.00mm	.4122 kg

Standard Lift-Off Hinge - Right Hand with Single Long Pin

Part Description:

The standard lift-off hinge – right hand with single long pin is made of anodized aluminum. The heavy-duty stainless steel hinge pin provides a smooth, long-lasting, strong connection. The captivated nylon thrust washer eliminates metal-to-metal contact and won't fall out. When the long pin is placed in the upper position it simplifies door assembly. Hinges with long pins are commonly used to create lift-off hinge assemblies (pages 525-527 for assembly options). The mounting hardware is included.

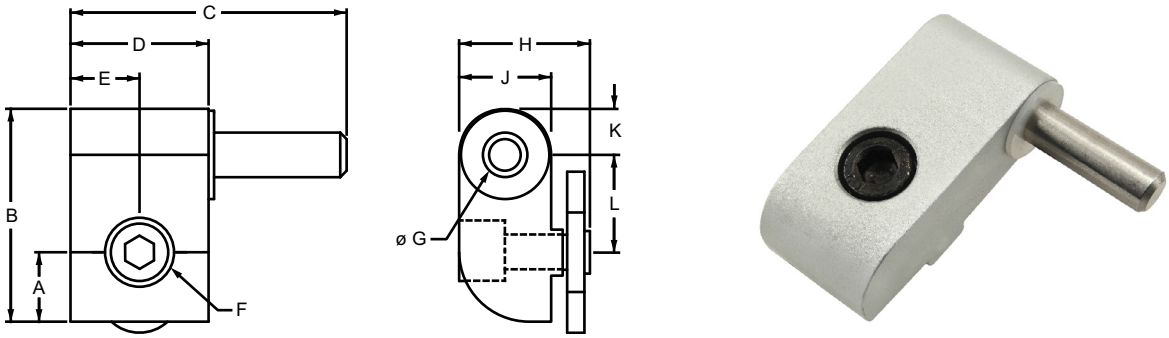

Part No.	Series	A	B	C	D	E	F	G	H	J	K	L	Weight
2073	10	.377"	1.156"	1.500"	.750"	.375"	10-32	.242"	.750"	.500"	.250"	.529"	.060 lb
2073-Black	10	.377"	1.156"	1.500"	.750"	.375"	10-32	.242"	.750"	.500"	.250"	.529"	.060 lb
2093	15	.625"	1.655"	1.500"	.750"	.375"	1/4-20	.242"	.875"	.500"	.250"	.780"	.086 lb
2093-Black	15	.625"	1.655"	1.500"	.750"	.375"	1/4-20	.242"	.875"	.500"	.250"	.780"	.086 lb
25-2073	25	9.40mm	29.00mm	38.05mm	19.05mm	9.53mm	M5 x 0.8	6.15mm	18.90mm	13.00mm	6.20mm	13.40mm	.0262 kg
25-2073-Black	25	9.40mm	29.00mm	38.05mm	19.05mm	9.53mm	M5 x 0.8	6.15mm	18.90mm	13.00mm	6.20mm	13.40mm	.0262 kg
40-2093	40	16.85mm	43.60mm	38.05mm	19.05mm	9.53mm	M6 x 1.0	6.15mm	18.90mm	13.00mm	6.12mm	20.70mm	.0436 kg
40-2093-Black	40	16.85mm	43.60mm	38.05mm	19.05mm	9.53mm	M6 x 1.0	6.15mm	18.90mm	13.00mm	6.12mm	20.70mm	.0436 kg

*The gap distance between the two mating profiles is .063" (1.60mm)

Material Specifications

Part No.	Material	Alloy*	Process	Finish
2073	Aluminum	6105-T5	Milled	Clear Anodize
2073-Black				Black Anodize
2093				Clear Anodize
2093-Black				Black Anodize
25-2073				Clear Anodize
25-2073-Black				Black Anodize
40-2093				Clear Anodize
40-2093-Black				Black Anodize

* Or comparable

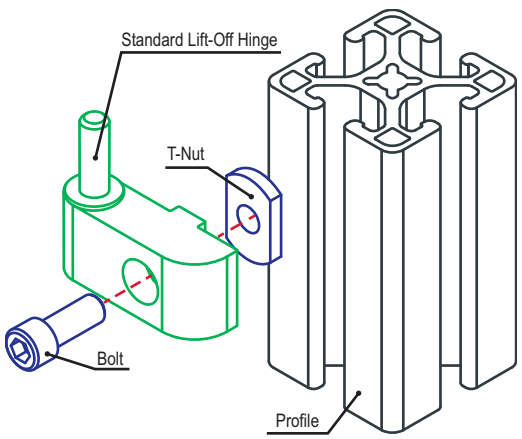

Included Hardware (Mount to T-Slot)

Series	Part No.	Qty.	Bolt	Part No.	Qty.	T-Nut
10	3048	1	10-32 x 1/2" SHCS (Black)	3276	1	Economy
15	3067	1	1/4-20 x 5/8" SHCS (Black)	3286	1	Economy
25	13-5512	1	M5 x 12mm SHCS (Blue)	25-1951	1	Economy
40	13-6516	1	M6 x 16mm SHCS (Blue)	3836	1	Economy

Standard Lift-Off Hinge - Right Hand with Single Short Pin

Part Description:

The standard lift-off hinge – right hand with single short pin is made of anodized aluminum. The heavy-duty stainless steel hinge pin provides a smooth, long-lasting, strong connection. The captivated nylon thrust washer eliminates metal-to-metal contact and won't fall out. Hinges with short pins are commonly used to create captivated assemblies (pages 525-527 for assembly options). The mounting hardware is included.

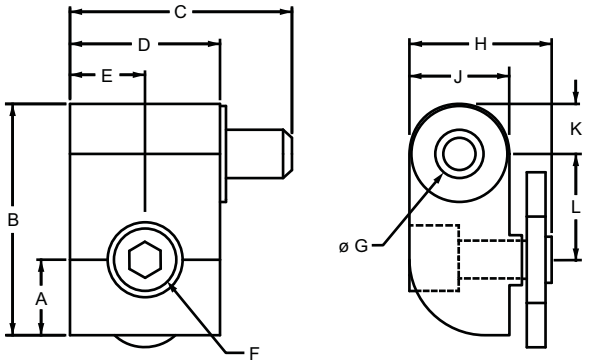

Part No.	Series	A	B	C	D	E	F	G	H	J	K	L	Weight
2075	10	.377"	1.156"	1.110"	.750"	.375"	10-32	.242"	.750"	.500"	.250"	.529"	.055 lb
2075-Black	10	.377"	1.156"	1.110"	.750"	.375"	10-32	.242"	.750"	.500"	.250"	.529"	.055 lb
2095	15	.625"	1.655"	1.110"	.750"	.375"	1/4-20	.242"	.875"	.500"	.250"	.780"	.082 lb
2095-Black	15	.625"	1.655"	1.110"	.750"	.375"	1/4-20	.242"	.875"	.500"	.250"	.780"	.082 lb
25-2075	25	9.40mm	29.00mm	28.15mm	19.05mm	9.53mm	M5 x 0.8	6.15mm	18.90mm	13.00mm	6.20mm	13.40mm	.0238 kg
25-2075-Black	25	9.40mm	29.00mm	28.15mm	19.05mm	9.53mm	M5 x 0.8	6.15mm	18.90mm	13.00mm	6.20mm	13.40mm	.0238 kg
40-2095	40	16.85mm	43.60mm	28.15mm	19.05mm	9.53mm	M6 x 1.0	6.15mm	18.90mm	13.00mm	6.12mm	20.70mm	.0415 kg
40-2095-Black	40	16.85mm	43.60mm	28.15mm	19.05mm	9.53mm	M6 x 1.0	6.15mm	18.90mm	13.00mm	6.12mm	20.70mm	.0415 kg

*The gap distance between the two mating profiles is .063" (1.60mm)

Material Specifications

Part No.	Material	Alloy*	Process	Finish
2075	Aluminum	6105-T5	Milled	Clear Anodize
2075-Black				Black Anodize
2095				Clear Anodize
2095-Black				Black Anodize
25-2075				Clear Anodize
25-2075-Black				Black Anodize
40-2095				Clear Anodize
40-2095-Black				Black Anodize

* Or comparable

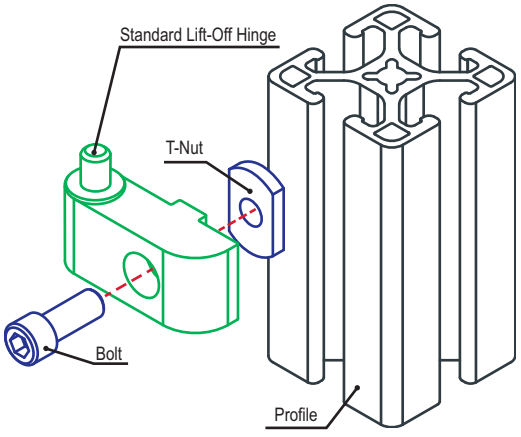

Included Hardware (Mount to T-Slot)

Series	Part No.	Qty.	Bolt	Part No.	Qty.	T-Nut
10	3048	1	10-32 x 1/2" SHCS (Black)	3276	1	Economy
15	3067	1	1/4-20 x 5/8" SHCS (Black)	3286	1	Economy
25	13-5512	1	M5 x 12mm SHCS (Blue)	25-1951	1	Economy
40	13-6516	1	M6 x 16mm SHCS (Blue)	3836	1	Economy

Standard Lift-Off Hinge - Left Hand with Single Long Pin

Part Description:

The standard lift-off hinge – left hand with single long pin is made of anodized aluminum. The heavy-duty stainless steel hinge pin provides a smooth, long-lasting, strong connection. The captivated nylon thrust washer eliminates metal-to-metal contact and won't fall out. When the long pin is placed in the upper position it simplifies door assembly. Hinges with long pins are commonly used to create lift-off assemblies (pages 525-527). The mounting hardware is included.

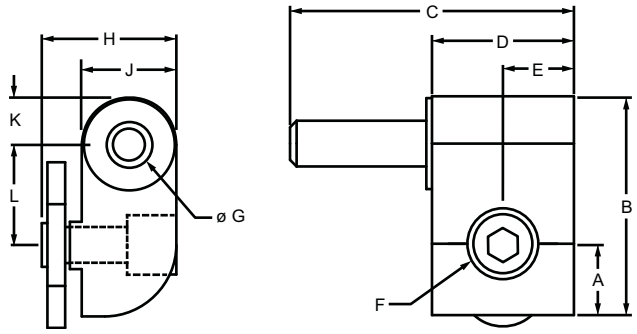

Part No.	Series	A	B	C	D	E	F	G	H	J	K	L	Weight
2074	10	.377"	1.156"	1.500"	.750"	.375"	10-32	.242"	.750"	.500"	.250"	.529"	.060 lb
2074-Black	10	.377"	1.156"	1.500"	.750"	.375"	10-32	.242"	.750"	.500"	.250"	.529"	.060 lb
2094	15	.625"	1.655"	1.500"	.750"	.375"	1/4-20	.242"	.875"	.500"	.250"	.780"	.087 lb
2094-Black	15	.625"	1.655"	1.500"	.750"	.375"	1/4-20	.242"	.875"	.500"	.250"	.780"	.087 lb
25-2074	25	9.40mm	29.00mm	38.05mm	19.05mm	9.53mm	M5 x 0.8	6.15mm	18.90mm	13.00mm	6.20mm	13.40mm	.0267 kg
25-2074-Black	25	9.40mm	29.00mm	38.05mm	19.05mm	9.53mm	M5 x 0.8	6.15mm	18.90mm	13.00mm	6.20mm	13.40mm	.0267 kg
40-2094	40	16.85mm	43.60mm	38.05mm	19.05mm	9.53mm	M6 x 1.0	6.15mm	18.90mm	13.00mm	6.12mm	20.70mm	.0436 kg
40-2094-Black	40	16.85mm	43.60mm	38.05mm	19.05mm	9.53mm	M6 x 1.0	6.15mm	18.90mm	13.00mm	6.12mm	20.70mm	.0436 kg

*The gap distance between the two mating profiles is .063" (1.60mm)

Material Specifications

Part No.	Material	Alloy*	Process	Finish
2074	Aluminum	6105-T5	Milled	Clear Anodize
2074-Black				Black Anodize
2094				Clear Anodize
2094-Black				Black Anodize
25-2074				Clear Anodize
25-2074-Black				Black Anodize
40-2094				Clear Anodize
40-2094-Black				Black Anodize

* Or comparable

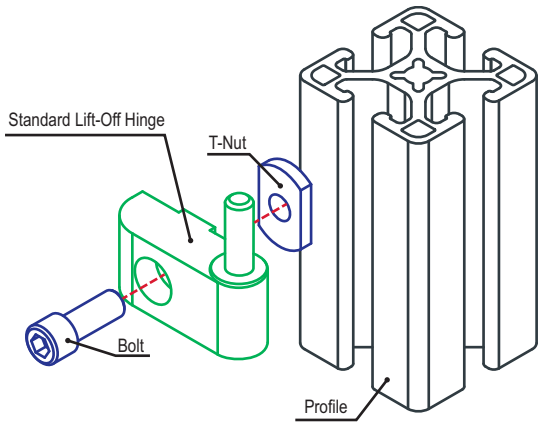

Included Hardware (Mount to T-Slot)

Series	Part No.	Qty.	Bolt	Part No.	Qty.	T-Nut
10	3048	1	10-32 x 1/2" SHCS (Black)	3276	1	Economy
15	3067	1	1/4-20 x 5/8" SHCS (Black)	3286	1	Economy
25	13-5512	1	M5 x 12mm SHCS (Blue)	25-1951	1	Economy
40	13-6516	1	M6 x 16mm SHCS (Blue)	3836	1	Economy

Standard Lift-Off Hinge - Left Hand with Single Short Pin

Part Description:

The standard lift-off hinge – left hand with single short pin is made of anodized aluminum. The heavy-duty stainless steel hinge pin provides a smooth, long-lasting, strong connection. The captivated nylon thrust washer eliminates metal-to-metal contact and won't fall out. Hinges with short pins are commonly used to create captivated assemblies (pages 525-527). The mounting hardware is included.

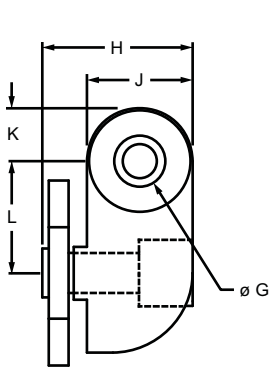

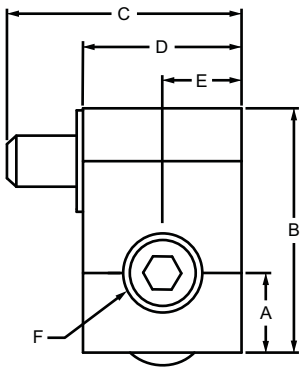

Part No.	Series	A	B	C	D	E	F	G	H	J	K	L	Weight
2076	10	.377"	1.156"	1.110"	.750"	.375"	10-32	.242"	.750"	.500"	.250"	.529"	.055 lb
2076-Black	10	.377"	1.156"	1.110"	.750"	.375"	10-32	.242"	.750"	.500"	.250"	.529"	.055 lb
2096	15	.625"	1.655"	1.110"	.750"	.375"	1/4-20	.242"	.875"	.500"	.250"	.780"	.082 lb
2096-Black	15	.625"	1.655"	1.110"	.750"	.375"	1/4-20	.242"	.875"	.500"	.250"	.780"	.082 lb
25-2076	25	9.40mm	29.00mm	28.15mm	19.05mm	9.53mm	M5 x 0.8	6.15mm	18.90mm	13.00mm	6.20mm	13.40mm	.0241 kg
25-2076-Black	25	9.40mm	29.00mm	28.15mm	19.05mm	9.53mm	M5 x 0.8	6.15mm	18.90mm	13.00mm	6.20mm	13.40mm	.0241 kg
40-2096	40	16.85mm	43.60mm	28.15mm	19.05mm	9.53mm	M6 x 1.0	6.15mm	18.90mm	13.00mm	6.12mm	20.70mm	.0413 kg
40-2096-Black	40	16.85mm	43.60mm	28.15mm	19.05mm	9.53mm	M6 x 1.0	6.15mm	18.90mm	13.00mm	6.12mm	20.70mm	.0413 kg

*The gap distance between the two mating profiles is .063" (1.60mm)

Material Specifications

Part No.	Material	Alloy*	Process	Finish
2076	Aluminum	6105-T5	Milled	Clear Anodize
2076-Black				Black Anodize
2096				Clear Anodize
2096-Black				Black Anodize
25-2076				Clear Anodize
25-2076-Black				Black Anodize
40-2096				Clear Anodize
40-2096-Black				Black Anodize

* Or comparable

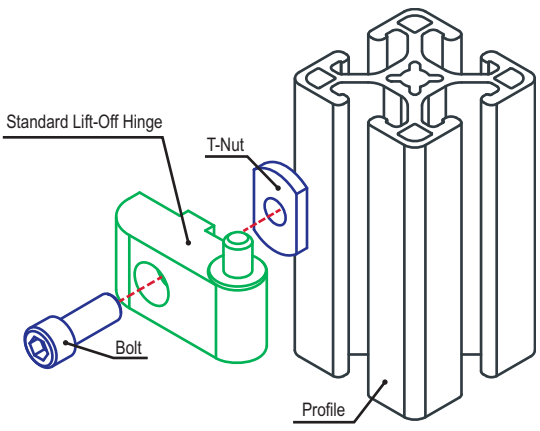

Included Hardware (Mount to T-Slot)

Series	Part No.	Qty.	Bolt	Part No.	Qty.	T-Nut
10	3048	1	10-32 x 1/2" SHCS (Black)	3276	1	Economy
15	3067	1	1/4-20 x 5/8" SHCS (Black)	3286	1	Economy
25	13-5512	1	M5 x 12mm SHCS (Blue)	25-1951	1	Economy
40	13-6516	1	M6 x 16mm SHCS (Blue)	3836	1	Economy

Part Description:

The standard lift-off hinge – mating hub is made of anodized aluminum. Use with lift-off hinges to create assemblies (see pages 525-527 for assembly options). The standard lift-off hinge with mating hub should not be used to connect two long pin hubs. The mounting hardware is included.

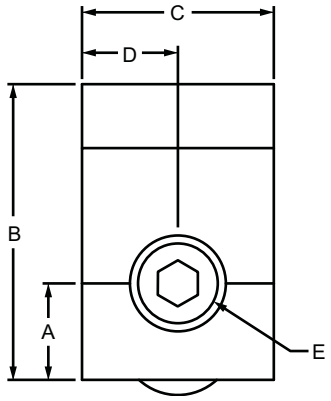

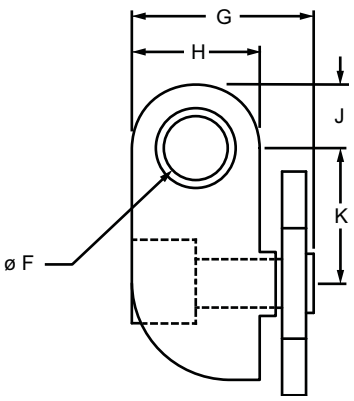

Part No.	Series	A	B	C	D	E	F	G	H	J	K	Weight
2077	10	.377"	1.156"	.750"	.375"	10-32	.250"	.750"	.500"	.250"	.529"	.049 lb
2077-Black	10	.377"	1.156"	.750"	.375"	10-32	.250"	.750"	.500"	.250"	.529"	.049 lb
2097	15	.625"	1.655"	.750"	.375"	1/4-20	.250"	.875"	.500"	.250"	.780"	.076 lb
2097-Black	15	.625"	1.655"	.750"	.375"	1/4-20	.250"	.875"	.500"	.250"	.780"	.076 lb
25-2077	25	9.40mm	29.00mm	19.05mm	9.53mm	M5 x 0.8	6.15mm	18.90mm	13.00mm	6.20mm	13.40mm	.0213 kg
25-2077-Black	25	9.40mm	29.00mm	19.05mm	9.53mm	M5 x 0.8	6.15mm	18.90mm	13.00mm	6.20mm	13.40mm	.0213 kg
40-2097	40	16.85mm	43.60mm	19.05mm	9.53mm	M6 x 1.0	6.15mm	18.90mm	13.00mm	6.12mm	20.70mm	.0386 kg
40-2097-Black	40	16.85mm	43.60mm	19.05mm	9.53mm	M6 x 1.0	6.15mm	18.90mm	13.00mm	6.12mm	20.70mm	.0386 kg

*The gap distance between the two mating profiles is .063" (1.60mm)

Material Specifications

Part No.	Material	Alloy*	Process	Finish
2077	Aluminum	6105-T5	Milled	Clear Anodize
2077-Black				Black Anodize
2097				Clear Anodize
2097-Black				Black Anodize
25-2077				Clear Anodize
25-2077-Black				Black Anodize
40-2097				Clear Anodize
40-2097-Black				Black Anodize

* Or comparable

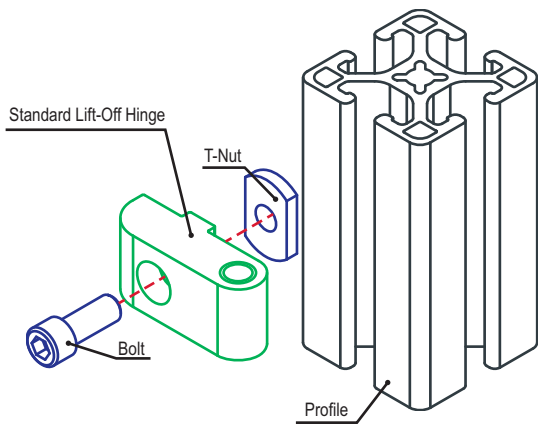

Included Hardware (Mount to T-Slot)

Series	Part No.	Qty.	Bolt	Part No.	Qty.	T-Nut
10	3048	1	10-32 x 1/2" SHCS (Black)	3276	1	Economy
15	3067	1	1/4-20 x 5/8" SHCS (Black)	3286	1	Economy
25	13-5512	1	M5 x 12mm SHCS (Blue)	25-1951	1	Economy
40	13-6516	1	M6 x 16mm SHCS (Blue)	3836	1	Economy

Standard Lift-Off Hinge with Double Short Pins

Part Description:

The standard lift-off hinge with double short pins is made of anodized aluminum. The heavy-duty stainless steel hinge pins provide a smooth, long-lasting, strong connection. The captivated nylon thrust washers eliminate metal-to-metal contact and won't fall out. The standard lift-off hinge with double short pins is commonly used with two standard lift-off hinge mating hubs to create a captivated assembly. The mounting hardware is included.

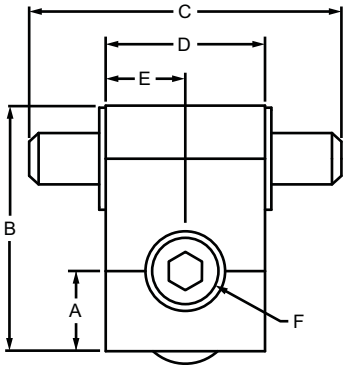

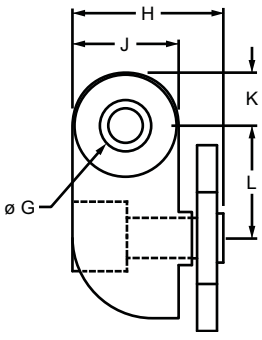

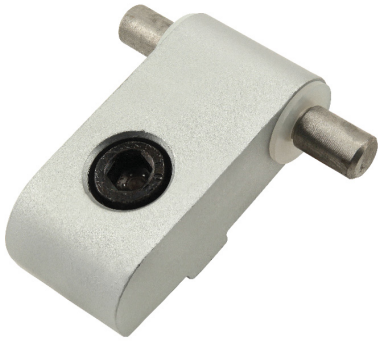

Part No.	Series	A	B	C	D	E	F	G	H	J	K	L	Weight
2078	10	.377"	1.156"	1.470"	.750"	.375"	10-32	.242"	.750"	.500"	.250"	.529"	.063 lb
2078-Black	10	.377"	1.156"	1.470"	.750"	.375"	10-32	.242"	.750"	.500"	.250"	.529"	.063 lb
2098	15	.625"	1.655"	1.470"	.750"	.375"	1/4-20	.242"	.875"	.500"	.250"	.780"	.089 lb
2098-Black	15	.625"	1.655"	1.470"	.750"	.375"	1/4-20	.242"	.875"	.500"	.250"	.780"	.089 lb
25-2078	25	9.40mm	29.00mm	37.30mm	19.05mm	9.53mm	M5 x 0.8	6.15mm	18.90mm	13.00mm	6.20mm	13.40mm	.0277 kg
25-2078-Black	25	9.40mm	29.00mm	37.30mm	19.05mm	9.53mm	M5 x 0.8	6.15mm	18.90mm	13.00mm	6.20mm	13.40mm	.0277 kg
40-2098	40	16.85mm	43.60mm	37.30mm	19.05mm	9.53mm	M6 x 1.0	6.15mm	18.90mm	13.00mm	6.12mm	20.70mm	.0448 kg
40-2098-Black	40	16.85mm	43.60mm	37.30mm	19.05mm	9.53mm	M6 x 1.0	6.15mm	18.90mm	13.00mm	6.12mm	20.70mm	.0448 kg

*The gap distance between the two mating profiles is .063" (1.60mm)

Material Specifications

Part No.	Material	Alloy*	Process	Finish
2078	Aluminum	6105-T5	Milled	Clear Anodize
2078-Black				Black Anodize
2098				Clear Anodize
2098-Black				Black Anodize
25-2078				Clear Anodize
25-2078-Black				Black Anodize
40-2098				Clear Anodize
40-2098-Black				Black Anodize

* Or comparable

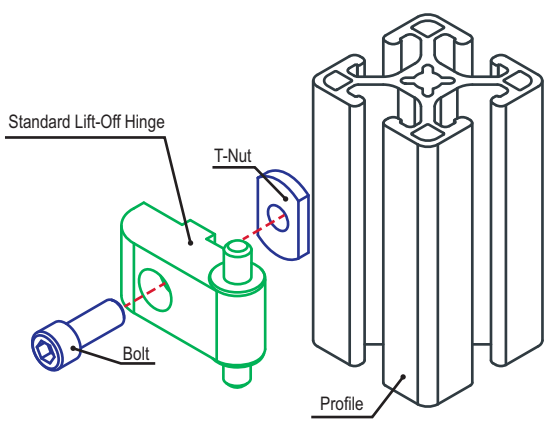

Included Hardware (Mount to T-Slot)

Series	Part No.	Qty.	Bolt	Part No.	Qty.	T-Nut
10	3048	1	10-32 x 1/2" SHCS (Black)	3276	1	Economy
15	3067	1	1/4-20 x 5/8" SHCS (Black)	3286	1	Economy
25	13-5512	1	M5 x 12mm SHCS (Blue)	25-1951	1	Economy
40	13-6516	1	M6 x 16mm SHCS (Blue)	3836	1	Economy

Standard Lift-Off Hinge - Right Hand Assembly

Part Description:

The standard lift-off hinge - right hand assembly is comprised of one standard lift-off hinge - right hand with single long pin, one standard lift-off hinge - right hand with single short pin and two standard lift-off hinge - mating hubs.

Part No.	Series	Assembly Components			Finish	Weight	Product Representation
2064	10	2073 Right Hand with Single Long Pin (Qty. 1)	2075 Right Hand with Single Short Pin (Qty. 1)	2077 Mating Hub (Qty. 2)	Clear Anodize	.214 lb	
2064-Black	10	2073 Right Hand with Single Long Pin (Qty. 1)	2075 Right Hand with Single Short Pin (Qty. 1)	2077 Mating Hub (Qty. 2)	Black Anodize	.214 lb	
2104	15	2093 Right Hand with Single Long Pin (Qty. 1)	2095 Right Hand with Single Short Pin (Qty. 1)	2097 Mating Hub (Qty. 2)	Clear Anodize	.322 lb	
2104-Black	15	2093 Right Hand with Single Long Pin (Qty. 1)	2095 Right Hand with Single Short Pin (Qty. 1)	2097 Mating Hub (Qty. 2)	Black Anodize	.322 lb	
2101	10 to 15	2093 Right Hand with Single Long Pin (Qty. 1)	2095 Right Hand with Single Short Pin (Qty. 1)	2077 Mating Hub (Qty. 2)	Clear Anodize	.262 lb	
2101-Black	10 to 15	2093 Right Hand with Single Long Pin (Qty. 1)	2095 Right Hand with Single Short Pin (Qty. 1)	2077 Mating Hub (Qty. 2)	Black Anodize	.262 lb	
25-2064	25	25-2073 Right Hand with Single Long Pin (Qty. 1)	25-2075 Right Hand with Single Short Pin (Qty. 1)	25-2077 Mating Hub (Qty. 2)	Clear Anodize	.0934 kg	
25-2064-Black	25	25-2073 Right Hand with Single Long Pin (Qty. 1)	25-2075 Right Hand with Single Short Pin (Qty. 1)	25-2077 Mating Hub (Qty. 2)	Black Anodize	.0934 kg	
40-2104	40	40-2093 Right Hand with Single Long Pin (Qty. 1)	40-2095 Right Hand with Single Short Pin (Qty. 1)	40-2097 Mating Hub (Qty. 2)	Clear Anodize	.1633 kg	
40-2104-Black	40	40-2093 Right Hand with Single Long Pin (Qty. 1)	40-2095 Right Hand with Single Short Pin (Qty. 1)	40-2097 Mating Hub (Qty. 2)	Black Anodize	.1633 kg	
65-2101	25 to 40	40-2093 Right Hand with Single Long Pin (Qty. 1)	40-2095 Right Hand with Single Short Pin (Qty. 1)	25-2077 Mating Hub (Qty. 2)	Clear Anodize	.1280 kg	
65-2101-Black	25 to 40	40-2093 Right Hand with Single Long Pin (Qty. 1)	40-2095 Right Hand with Single Short Pin (Qty. 1)	25-2077 Mating Hub (Qty. 2)	Black Anodize	.1280 kg	

Standard Lift-Off Hinge - Left Hand Assembly

Part Description:

The standard lift-off hinge - left hand assembly is comprised of one standard lift-off hinge - left hand with single long pin, one standard lift-off hinge - left hand with single short pin, and two standard lift-off hinge - mating hubs.

Part No.	Series	Assembly Components			Finish	Weight	Product Representation
2065	10	2074 Left Hand with Single Long Pin (Qty. 1)	2076 Left Hand with Single Short Pin (Qty. 1)	2077 Mating Hub (Qty. 2)	Clear Anodize	.212 lb	
2065-Black	10	2074 Left Hand with Single Long Pin (Qty. 1)	2076 Left Hand with Single Short Pin (Qty. 1)	2077 Mating Hub (Qty. 2)	Black Anodize	.212 lb	
2105	15	2094 Left Hand with Single Long Pin (Qty. 1)	2096 Left Hand with Single Short Pin (Qty. 1)	2097 Mating Hub (Qty. 2)	Clear Anodize	.323 lb	
2105-Black	15	2094 Left Hand with Single Long Pin (Qty. 1)	2096 Left Hand with Single Short Pin (Qty. 1)	2097 Mating Hub (Qty. 2)	Black Anodize	.323 lb	
2102	10 to 15	2094 Left Hand with Single Long Pin (Qty. 1)	2096 Left Hand with Single Short Pin (Qty. 1)	2077 Mating Hub (Qty. 2)	Clear Anodize	.268 lb	
2102-Black	10 to 15	2094 Left Hand with Single Long Pin (Qty. 1)	2096 Left Hand with Single Short Pin (Qty. 1)	2077 Mating Hub (Qty. 2)	Black Anodize	.268 lb	
25-2065	25	25-2074 Left Hand with Single Long Pin (Qty. 1)	25-2076 Left Hand with Single Short Pin (Qty. 1)	25-2077 Mating Hub (Qty. 2)	Clear Anodize	.0928 kg	
25-2065-Black	25	25-2074 Left Hand with Single Long Pin (Qty. 1)	25-2076 Left Hand with Single Short Pin (Qty. 1)	25-2077 Mating Hub (Qty. 2)	Black Anodize	.0928 kg	
40-2105	40	40-2094 Left Hand with Single Long Pin (Qty. 1)	40-2096 Left Hand with Single Short Pin (Qty. 1)	40-2097 Mating Hub (Qty. 2)	Clear Anodize	.1637 kg	
40-2105-Black	40	40-2094 Left Hand with Single Long Pin (Qty. 1)	40-2096 Left Hand with Single Short Pin (Qty. 1)	40-2097 Mating Hub (Qty. 2)	Black Anodize	.1637 kg	
65-2102	25 to 40	40-2094 Left Hand with Single Long Pin (Qty. 1)	40-2096 Left Hand with Single Short Pin (Qty. 1)	25-2077 Mating Hub (Qty. 2)	Clear Anodize	.1270 kg	
65-2102-Black	25 to 40	40-2094 Left Hand with Single Long Pin (Qty. 1)	40-2096 Left Hand with Single Short Pin (Qty. 1)	25-2077 Mating Hub (Qty. 2)	Black Anodize	.1270 kg	

Part Description:

The standard captive lift-off hinge assembly is comprised of one standard lift-off hinge - right hand with single short pin, one standard lift-off hinge - left hand with single short pin, and one standard lift-off hinge - mating hub.

Part No.	Series	Assembly Components			Finish	Weight	Product Representation
2066	10	2075 Right Hand with Single Short Pin (Qty. 1)	2076 Left Hand with Single Short Pin (Qty. 1)	2077 Mating Hub (Qty. 1)	Clear Anodize	.160 lb	
2066-Black	10	2075 Right Hand with Single Short Pin (Qty. 1)	2076 Left Hand with Single Short Pin (Qty. 1)	2077 Mating Hub (Qty. 1)	Black Anodize	.160 lb	
2106	15	2095 Right Hand with Single Short Pin (Qty. 1)	2096 Left Hand with Single Short Pin (Qty. 1)	2097 Mating Hub (Qty. 1)	Clear Anodize	.242 lb	
2106-Black	15	2095 Right Hand with Single Short Pin (Qty. 1)	2096 Left Hand with Single Short Pin (Qty. 1)	2097 Mating Hub (Qty. 1)	Black Anodize	.242 lb	
2103	10 to 15	2095 Right Hand with Single Short Pin (Qty. 1)	2096 Left Hand with Single Short Pin (Qty. 1)	2077 Mating Hub (Qty. 1)	Clear Anodize	.214 lb	
2103-Black	10 to 15	2095 Right Hand with Single Short Pin (Qty. 1)	2096 Left Hand with Single Short Pin (Qty. 1)	2077 Mating Hub (Qty. 1)	Black Anodize	.214 lb	
25-2066	25	25-2075 Right Hand with Single Short Pin (Qty. 1)	25-2076 Left Hand with Single Short Pin (Qty. 1)	25-2077 Mating Hub (Qty. 1)	Clear Anodize	.0696 kg	
25-2066-Black	25	25-2075 Right Hand with Single Short Pin (Qty. 1)	25-2076 Left Hand with Single Short Pin (Qty. 1)	25-2077 Mating Hub (Qty. 1)	Black Anodize	.0696 kg	
40-2106	40	40-2095 Right Hand with Single Short Pin (Qty. 1)	40-2096 Left Hand with Single Short Pin (Qty. 1)	40-2097 Mating Hub (Qty. 1)	Clear Anodize	.0417 kg	
40-2106-Black	40	40-2095 Right Hand with Single Short Pin (Qty. 1)	40-2096 Left Hand with Single Short Pin (Qty. 1)	40-2097 Mating Hub (Qty. 1)	Black Anodize	.0417 kg	
65-2103	25 to 40	40-2095 Right Hand with Single Short Pin (Qty. 1)	40-2096 Left Hand with Single Short Pin (Qty. 1)	25-2077 Mating Hub (Qty. 1)	Clear Anodize	.1044 kg	
65-2103-Black	25 to 40	40-2095 Right Hand with Single Short Pin (Qty. 1)	40-2096 Left Hand with Single Short Pin (Qty. 1)	25-2077 Mating Hub (Qty. 1)	Black Anodize	.1044 kg	

Bi-Fold Door Application Example

Designing a bi-fold door using 80/20® products is a straight-forward process. Simply remember to include the hinge and opening gaps when sizing the inside dimension of your door, while taking into account the profile size. Follow the steps listed and reference the drawing for the standard method of designing a bi-fold door.

Step 1: Select the profile you will use for building your bi-fold door. Typically this is the same as the frame.

Step 2: Determine the opening width of your door.

Step 3: Choose your hinge type and find the standard gap between profiles when using that hinge.

Step 4: Choose the total width for each inside door, remembering to subtract the hinge and clearance gaps.

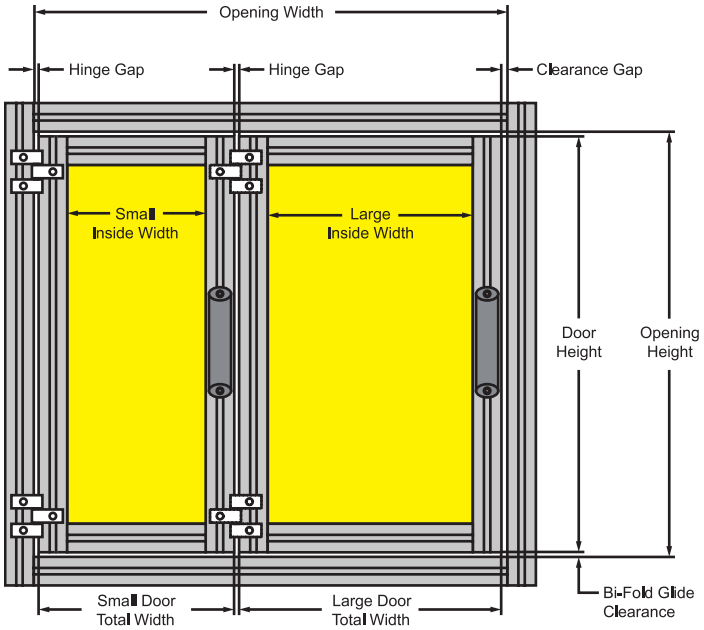

Framed & Unframed Doors

- For both framed and unframed doors the hinge side gap depends on hinge.
- Framed Doors: There is a 1/4" (6.35mm) top, bottom and handle gap. When using door gasket subtract 1/8" (3.175mm).
- Unframed Doors: There is a 1/8" (3.175mm) top, bottom and handle gap.

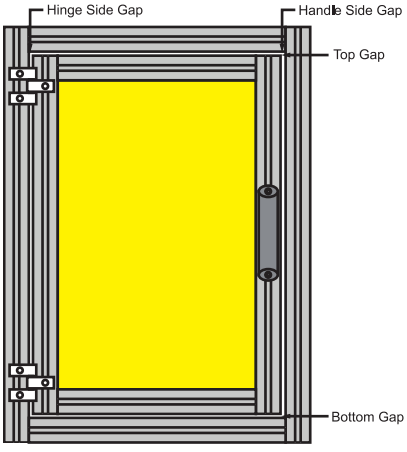

Framed Door

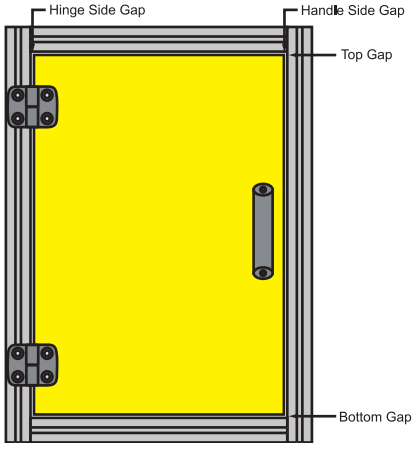

Unframed Door

Economy Lift-Off Hinge Right Hand with Long Pin

Part Description:

The economy lift-off hinge right hand with long pin is a cost-effective option made of aluminum and commonly used in lightweight doors. When the long pin is placed in the upper position it simplifies door assembly. Hinges with long pins are commonly used to create lift off hinge assemblies (page 533 for assembly options).

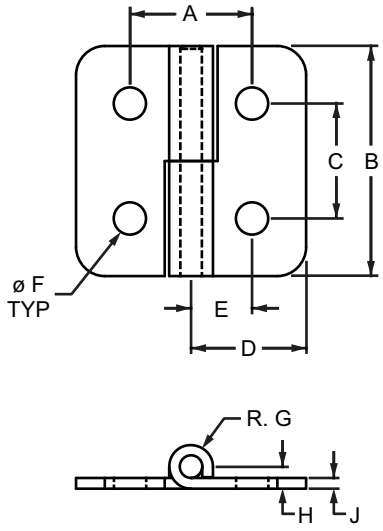

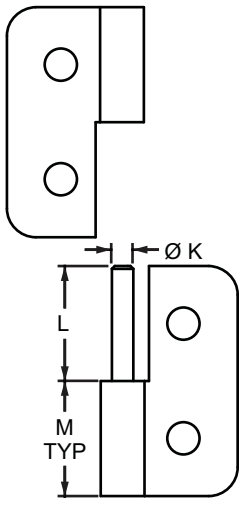

Part No.	Series	Max Load	A	B	C	D	E	F	G	H	J	K	L	M	Weight
2838	10	40 lb	1.062"	2.000"	1.000"	1.000"	.531"	.281"	.191"	.191"	.093"	.187"	1.000"	1.000"	.047 lb
2840	15	70 lb	1.620"	3.000"	1.500"	1.500"	.812"	.328"	.250"	.250"	.120"	.250"	1.500"	1.500"	.140 lb
25-2838	25	18 kg	26.97mm	50.80mm	25.40mm	25.40mm	13.48mm	7.13mm	4.85mm	4.85mm	2.36mm	4.75mm	25.40mm	25.40mm	.0208 kg
40-2840	40	32 kg	41.15mm	76.20mm	38.10mm	38.10mm	20.62mm	8.30mm	6.35mm	6.35mm	3.05mm	6.35mm	50.80mm	50.80mm	.0642 kg

*The gap distance between profiles for 10 series is .062", 15 series is .120", 25 series is 1.97mm, 40 series is 1.15mm.

Material Specifications

Material	Alloy	Finish	Process
Aluminum	5052-H32 = Leaf 6061-T6 = Pin	Clear Anodize	Milled

Suggested Hardware (Mount to T-Slot)

Part No.	Series	Qty.	Bolt	T-Nut
3386	10	4	1/4-20 x 3/8 FBHSCS	Economy
3319	15	4	5/16-18 x 1/2 FBHSCS	Economy
75-3404	25	4	M6 x 10mm BHSCS	Economy
75-3421	40	4	M8 x 12mm BHSCS	Economy

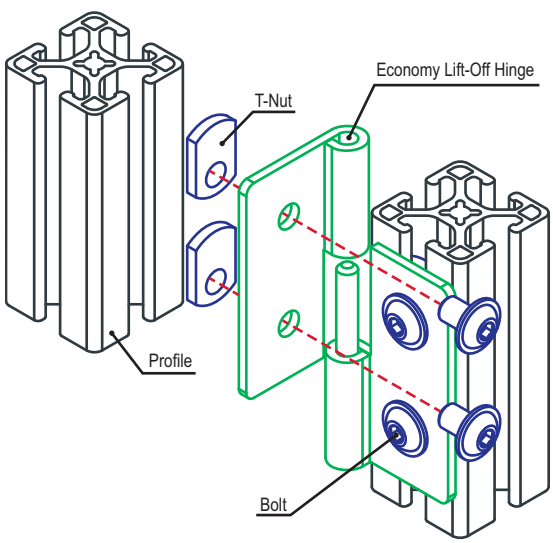

Economy Lift-Off Hinge Right Hand with Short Pin

Part Description:

The economy lift-off hinge right hand with short pin is a cost-effective option made of aluminum and commonly used in lightweight doors. Hinges with short pins are commonly used to create lift-off assemblies (page 533 for assembly options).

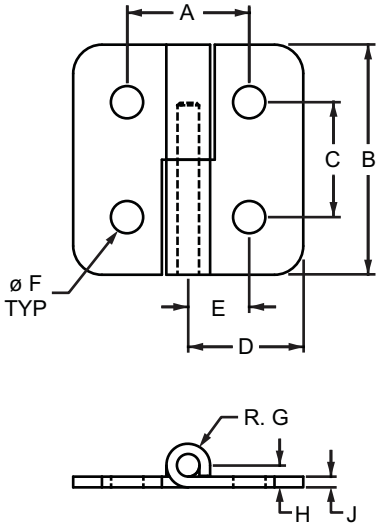

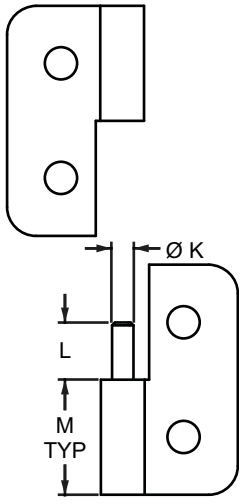

Part No.	Series	Max Load	A	B	C	D	E	F	G	H	J	K	L	M	Weight
2837	10	40 lb	1.062"	2.000"	1.000"	1.000"	.531"	.281"	.191"	.191"	.093"	.187"	.500"	1.000"	.045 lb
2839	15	70 lb	1.620"	3.000"	1.500"	1.500"	.812"	.328"	.250"	.250"	.120"	.250"	.750"	1.500"	.134 lb
25-2837	25	18 kg	26.97mm	50.80mm	25.40mm	25.40mm	13.48mm	7.13mm	4.85mm	4.85mm	2.36mm	4.75mm	12.70mm	25.40mm	.0200 kg
40-2839	40	32 kg	41.15mm	76.20mm	38.10mm	38.10mm	20.62mm	8.30mm	6.35mm	6.35mm	3.05mm	6.35mm	19.05mm	50.80mm	.2758 kg

*The gap distance between profiles for 10 series is .062", 15 series is .120", 25 series is 1.97mm, 40 series is 1.15mm.

Material Specifications

Material	Alloy	Finish	Process
Aluminum	5052-H32 = Leaf 6061-T6 = Pin	Clear Anodize	Milled

Suggested Hardware (Mount to T-Slot)

Part No.	Series	Qty.	Bolt	T-Nut
3386	10	4	1/4-20 x 3/8 FBHSCS	Economy
3319	15	4	5/16-18 x 1/2 FBHSCS	Economy
75-3404	25	4	M6 x 10mm BHSCS	Economy
75-3421	40	4	M8 x 12mm BHSCS	Economy

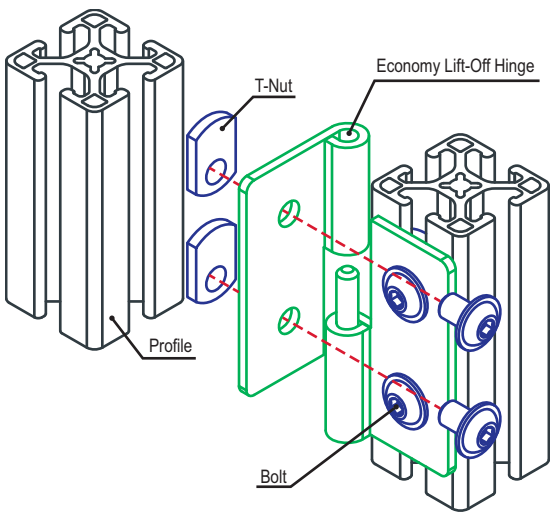

Economy Lift-Off Hinge Left Hand with Long Pin

Part Description:

The economy lift-off hinge left hand with long pin is a cost-effective option made of aluminum and commonly used in lightweight doors. When the long pin is placed in the upper position it simplifies door assembly. Hinges with long pins are commonly used to create lift off hinge assemblies (page 533 for assembly options).

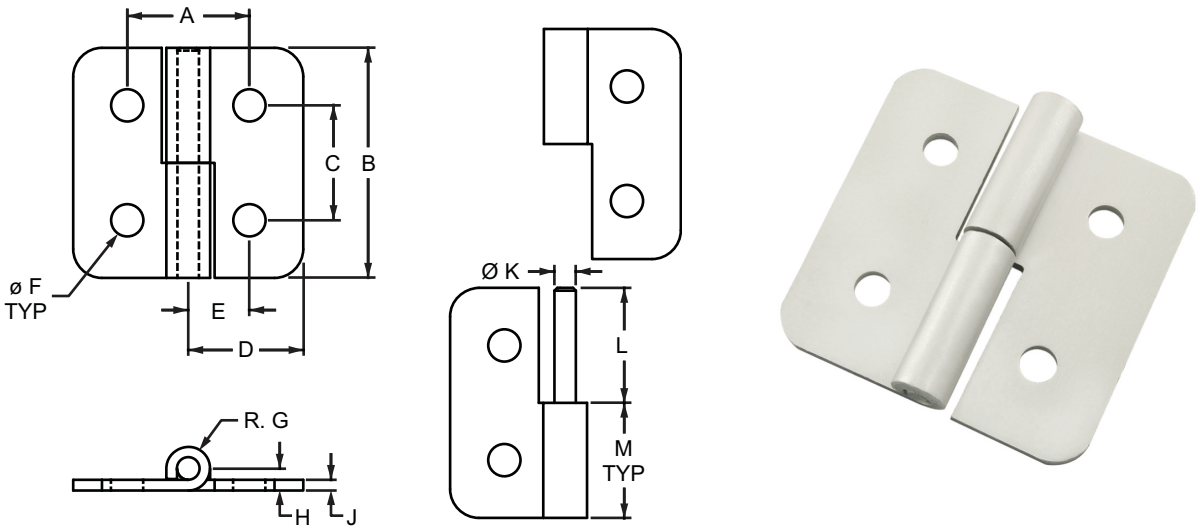

Part No.	Series	Max Load	A	B	C	D	E	F	G	H	J	K	L	M	Weight
2831	10	40 lb	1.062"	2.000"	1.000"	1.000"	.531"	.281"	.191"	.191"	.093"	.187"	1.000"	1.000"	.045 lb
2833	15	70 lb	1.620"	3.000"	1.500"	1.500"	.812"	.328"	.250"	.250"	.120"	.250"	1.500"	1.500"	.134 lb
25-2831	25	18 kg	26.97mm	50.80mm	25.40mm	25.40mm	13.48mm	7.13mm	4.85mm	4.85mm	2.36mm	4.75mm	25.40mm	25.40mm	.02041 kg
40-2833	40	32 kg	41.15mm	76.20mm	38.10mm	30.52mm	20.62mm	8.30mm	6.35mm	6.35mm	3.05mm	6.35mm	50.80mm	50.80mm	.0629 kg

*The gap distance between profiles for 10 series is .062", 15 series is .120", 25 series is 1.97mm, 40 series is 1.15mm.

Material Specifications

Material	Alloy	Finish	Process
Aluminum	5052-H32 = Leaf 6061-T6 = Pin	Clear Anodize	Milled

Suggested Hardware (Mount to T-Slot)

Part No.	Series	Qty.	Bolt	T-Nut
3386	10	4	1/4-20 x 3/8 FBHSCS	Economy
3319	15	4	5/16-18 x 1/2 FBHSCS	Economy
75-3404	25	4	M6 x 10mm BHSCS	Economy
75-3421	40	4	M8 x 12mm BHSCS	Economy

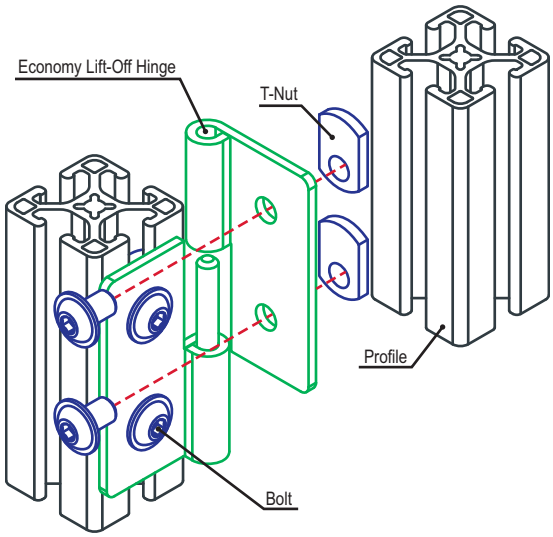

Economy Lift-Off Hinge Left Hand with Short Pin

Part Description:

The economy lift-off hinge left hand with short pin is a cost-effective option made of aluminum and commonly used in lightweight doors. Hinges with short pins are commonly used to create lift-off assemblies (page 533 for assembly options).

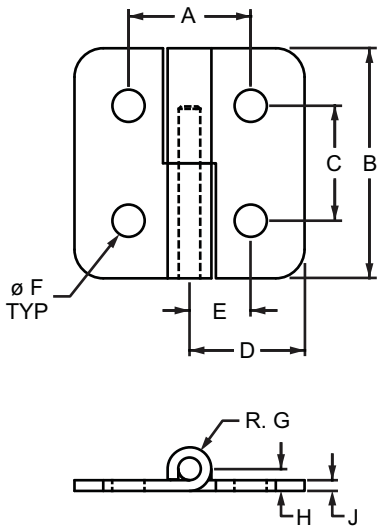

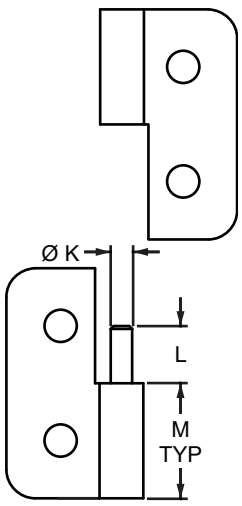

Part No.	Series	Max Load	A	B	C	D	E	F	G	H	J	K	L	M	Weight
2830	10	40 lb	1.062"	2.000"	1.000"	1.000"	.531"	.281"	.191"	.191"	.093"	.187"	.500"	1.000"	.045 lb
2832	15	70 lb	1.620"	3.000"	1.500"	1.500"	.812"	.328"	.250"	.250"	.120"	.250"	1.500"	1.500"	.134 lb
25-2830	25	18 kg	26.97mm	50.80mm	25.40mm	25.40mm	13.48mm	7.13mm	4.85mm	4.85mm	2.36mm	4.75mm	12.70mm	25.40mm	.0090 kg
40-2832	40	32 kg	41.15mm	76.20mm	38.10mm	41.02mm	20.62mm	8.30mm	6.35mm	6.35mm	3.05mm	6.35mm	19.05mm	50.80mm	.0607 kg

*The gap distance between profiles for 10 series is .062", 15 series is .120", 25 series is 1.97mm, 40 series is 1.15mm.

Material Specifications

Material	Alloy	Finish	Process
Aluminum	5052-H32 = Leaf 6061-T6 = Pin	Clear Anodize	Milled

Suggested Hardware (Mount to T-Slot)

Part No.	Series	Qty.	Bolt	T-Nut
3386	10	4	1/4-20 x 3/8 FBHSCS	Economy
3319	15	4	5/16-18 x 1/2 FBHSCS	Economy
75-3404	25	4	M6 x 10mm BHSCS	Economy
75-3421	40	4	M8 x 12mm BHSCS	Economy

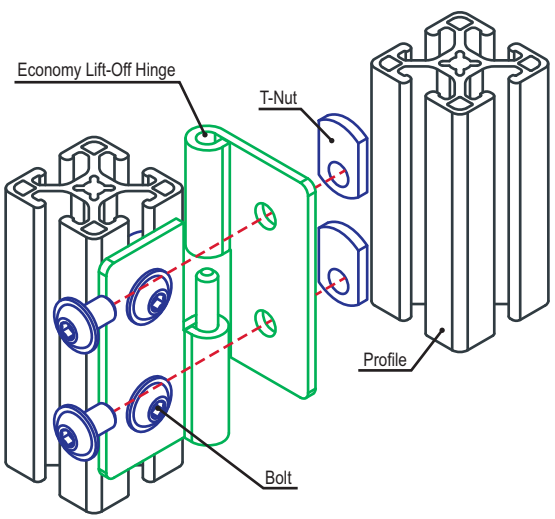

Part Description:

The economy lift-off hinge assembly is a cost-effective option commonly used to create lift-off hinges for lightweight doors. It is available in a right-hand and a left-hand orientation. Each assembly is comprised of two hinges; one long pin hinge and one short pin hinge.

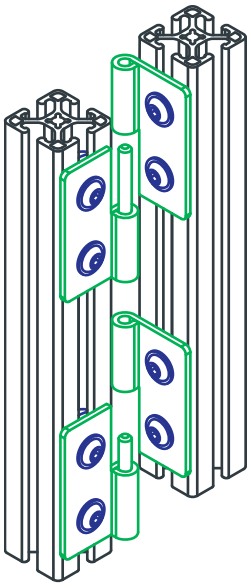

Left Hinge: 2835, 25-2835

Left Hinge: 2836, 40-2836

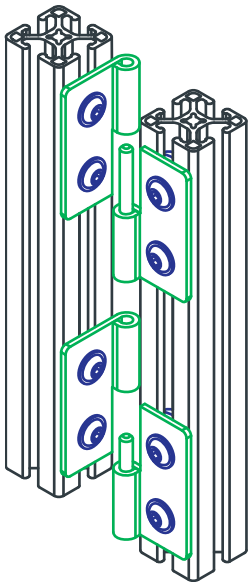

Right Hinge: 2841, 25-2841

Right Hinge: 2842, 40-2842

Part No.	Series	Orientation	Material	Alloy	Finish	Process	Weight
2841	10	Right Hinge	Aluminum	5052-H32 = Leaf 6061-T6 = Pin	Clear Anodize	Milled	.090 lb
2835	10	Left Hinge					.088 lb
2842	15	Right Hinge					.270 lb
2836	15	Left Hinge					.270 lb
25-2841	25	Right Hinge					.0186 kg
25-2835	25	Left Hinge					.0181 kg
40-2842	40	Right Hinge					.1211 kg
40-2836	40	Left Hinge					.1220 kg

* Hinge assemblies include (2) hinges; one long pin, and one short pin.

Suggested Hardware (Mount to T-Slot)

Part No.	Series	Qty.	Bolt	T-Nut
3386	10	8	1/4-20 x 3/8 FBHSCS	Economy
3319	15	8	5/16-18 x 1/2 FBHSCS	Economy
75-3404	25	8	M6 x 10mm BHSCS	Economy
75-3421	40	8	M8 x 12mm BHSCS	Economy

4 Hole - Concealed Hinge

Part Description:

The 4 hole - concealed hinge allows you to design doors with hidden hinges when the door is closed. The hinge mounts to the inside of the frame, which makes enclosures more secure; they are not able to be dismantled when the door is shut.

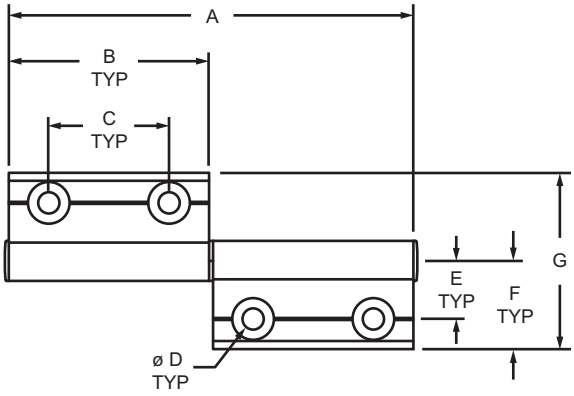

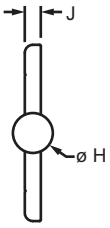

Part No.	Series	A	B	C	D	E	F	G	H	J*	Weight
2324	20	3.976"	1.969"	1.181"	.209"	.571"	.866"	1.732"	.394"	.157"	.033 lb
2325	10 25	3.976"	1.969"	1.181"	.252"	.689"	1.102"	2.205"	.394"	.157"	.040 lb
2326	30	3.976"	1.969"	1.181"	.252"	.768"	1.260"	2.520"	.394"	.157"	.044 lb
2327	15 40	3.976"	1.969"	1.181"	.252"	.984"	1.654"	3.307"	.394"	.157"	.055 lb
2328	45	3.976"	1.969"	1.181"	.252"	1.063"	1.850"	3.701"	.394"	.157"	.062 lb

*Dimension "J" also defines the hinge gap between two profiles.

Material Specifications

Material	Alloy	Finish	Process
Aluminum	6060	Clear Anodize	Extruded

Suggested Hardware (Mount to T-Slot)

Series	Part No.	Qty.	Bolt	Part No.	Qty.	T-Nut
20	11-5708	4	M5 x 8mm FHSCS	14122	4	Slide-in
10 25	13-6710	4	M6 x 10mm FHSCS	25-1961	4	Slide-in
30	13-6712	4	M6 x 12mm FHSCS	30-1961	4	Slide-in
15	11-6714	4	M6 x 14mm FHSCS	3836	4	Slide-in
40	11-6714	4	M6 x 14mm FHSCS	40-1961	4	Slide-in
45	13-6716	4	M6 x 16mm FHSCS	14126	4	Slide-in

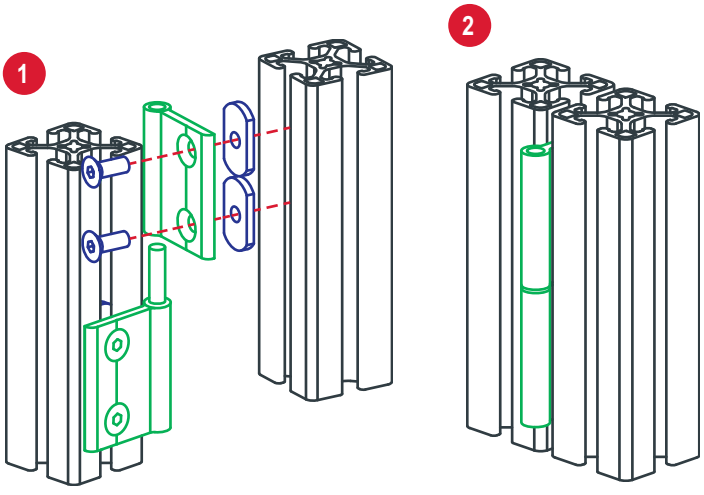

Open View

Closed View

Part Description:

The 4 hole - plastic lift-off hinge comes in both right and left hand options and is made of fiberglass-reinforced black nylon with a stainless steel pin. It is commonly used to connect plastic panels and lightweight doors to T-slot profiles and is available in options with slot tabs to assist with alignment.

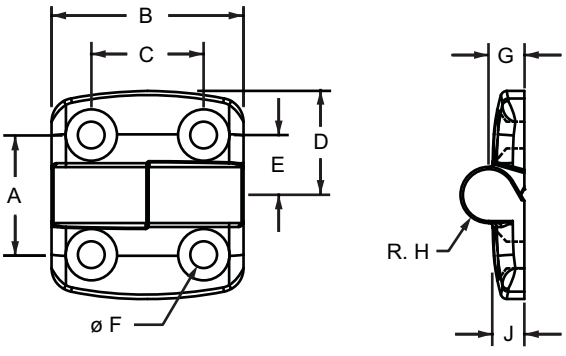

Left Hand

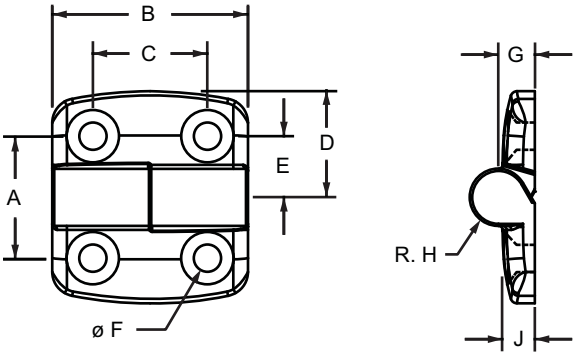

Right Hand

Part No.	Series	Orientation	Max Load	Slot Tab	A	B	C	D	E	F	G	H	J	Weight
12101	10 25	Left Hand	25 Nm / 18 ft-Lbs.	—	30.00mm	48.00mm	28.00mm	26.00mm	15.00mm	6.60mm	8.95mm	7.00mm	7.90mm	.0329 kg
12102	10 25	Left Hand		6.00mm	30.00mm	48.00mm	28.00mm	26.00mm	15.00mm	6.60mm	8.90mm	7.00mm	7.90mm	.0337 kg
12104	10 25	Right Hand		—	30.00mm	48.00mm	28.00mm	26.00mm	15.00mm	6.60mm	8.95mm	7.00mm	7.90mm	.0334 kg
12105	10 25	Right Hand		6.00mm	30.00mm	48.00mm	28.00mm	26.00mm	15.00mm	6.60mm	8.90mm	7.00mm	7.90mm	.0335 kg
12119	15	Left Hand	25 ft-Lbs.	—	40.00mm	48.00mm	28.00mm	35.50mm	20.00mm	6.60mm	8.90mm	7.00mm	8.70mm	.0404 kg
12120	15	Left Hand		8.00mm	40.00mm	48.00mm	28.00mm	35.50mm	20.00mm	6.60mm	8.90mm	7.00mm	7.90mm	.0399 kg
12122	15	Right Hand		—	40.00mm	48.00mm	28.00mm	35.50mm	20.00mm	6.60mm	8.90mm	7.00mm	7.90mm	.0403 kg
12123	15	Right Hand		8.00mm	40.00mm	48.00mm	28.00mm	35.50mm	20.00mm	6.60mm	8.90mm	7.00mm	7.90mm	.0399 kg
12128	15 40	Left Hand	35 Nm / 25 ft-Lbs.	—	45.00mm	48.00mm	28.00mm	38.50mm	22.50mm	6.60mm	8.90mm	7.00mm	7.90mm	.0429 kg
12129	15 40	Left Hand		8.00mm	45.00mm	48.00mm	28.00mm	38.50mm	22.50mm	6.60mm	8.90mm	7.00mm	7.50mm	.0437 kg
12131	15 40	Right Hand		—	45.00mm	48.00mm	28.00mm	38.50mm	22.50mm	6.60mm	8.90mm	7.00mm	7.60mm	.0438 kg
12132	15 40	Right Hand		8.00mm	45.00mm	48.00mm	28.00mm	38.50mm	22.50mm	6.60mm	8.90mm	7.00mm	7.50mm	.0449 kg

*The gap distance between profiles is .075" (1.90mm)

CONTINUE

4 Hole - Plastic Lift-Off Hinge (Continued)

80/20 Inc.

Part No.	Series	Orientation	Max Load	Slot Tab	A	B	C	D	E	F	G	H	J	Weight
12110	30	Left Hand	25 Nm / 18 ft-Lbs.	—	35.00mm	48.00mm	28.00mm	29.50mm	17.50mm	6.60mm	8.90mm	7.00mm	8.50mm	.0367 kg
12111	30	Left Hand		8.00mm	35.00mm	48.00mm	28.00mm	29.50mm	17.50mm	6.60mm	8.90mm	7.00mm	7.90mm	.0365kg
12113	30	Right Hand		—	35.00mm	48.00mm	28.00mm	29.50mm	17.50mm	6.60mm	8.90mm	7.00mm	8.40mm	.0374 kg
12114	30	Right Hand		8.00mm	35.00mm	48.00mm	28.00mm	29.50mm	17.50mm	6.60mm	8.90mm	7.00mm	7.20mm	.0358 kg
12137	45	Left Hand	35 Nm / 25 ft-Lbs.	—	50.00mm	48.00mm	28.00mm	43.50mm	25.00mm	6.60mm	8.90mm	7.00mm	7.90mm	.0469 kg
12139	45	Left Hand		10.00mm	50.00mm	48.00mm	28.00mm	43.50mm	25.00mm	6.60mm	8.90mm	7.00mm	7.90mm	.0467 kg
12140	45	Right Hand		—	50.00mm	48.00mm	28.00mm	43.50mm	25.00mm	6.60mm	8.90mm	7.00mm	7.60mm	.0470 kg
12142	45	Right Hand		10.00mm	50.00mm	48.00mm	28.00mm	43.50mm	25.00mm	6.60mm	8.90mm	7.00mm	7.60mm	.0469 kg

*The gap distance between profiles is .075" (1.90mm)

Material Specifications

Material	Grade	Color	Process
Nylon PA Glass Fiber Reinforced	PA6GF30	Black	Injection Molding

Suggested Hardware Per Leaf (Mount to Panel)

Part No.	Series	Qty.	Bolt	Hex Nut	Washer
75-3589	10 15 25 30 40 45	2	M6 x 20mm FHSCS	Yes	Yes

Suggested Hardware Per Leaf (Mount to T-Slot)

Part No.	Series	Qty.	Bolt	T-Nut
75-3584	10 25	2	M6 x 14mm FHSCS	Slide-in
75-3585	30	2	M6 x 14mm FHSCS	Drop-in
75-3628	15 40	2	M6 x 18mm FHSCS	Drop-in
75-3587	45	2	M6 x 18mm FHSCS	Drop-in

Left Hand

Pin on the left, door opens right to left

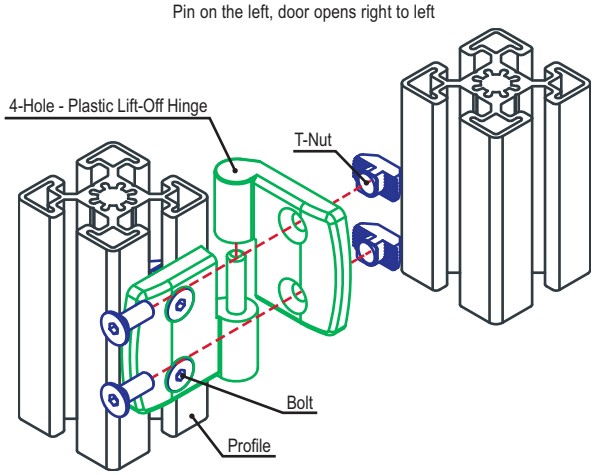

Right Hand

Pin on the right, door opens left to right

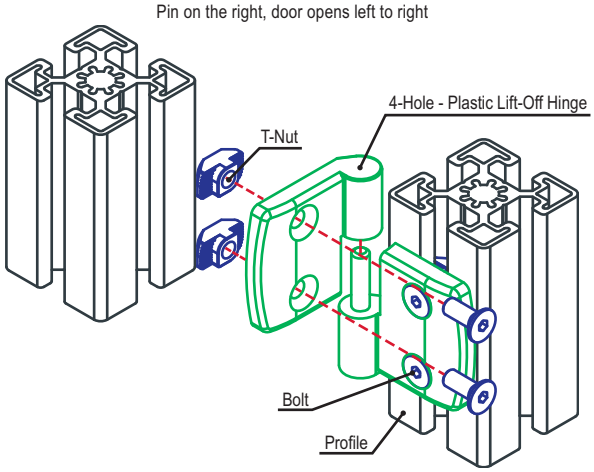

Part Description:

The 2 hole - plastic lift-off hinge comes in both right and left hand options and is made of fiberglass-reinforced black nylon with a stainless steel pin. It is commonly used to connect plastic panels and lightweight doors to T-slot profiles.

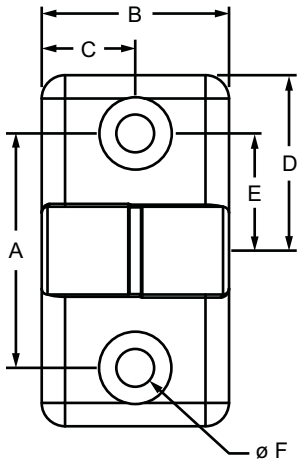

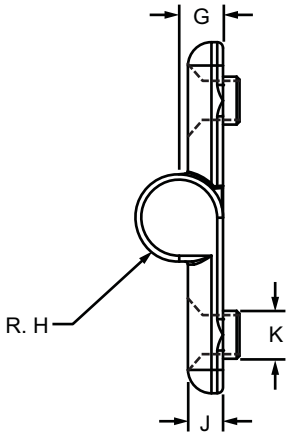

Part No.	Series	Orientation	Max Load	A	B	C	D	E	F	G	H	J	K	Weight
12072	15	Left	20 ft-Lbs.	1.575"	1.260"	.630"	1.181"	.787"	.252"	.295"	.295"	.236"	.323"	.046 lb
12073	15	Right		1.575"	1.260"	.630"	1.181"	.787"	.252"	.295"	.295"	.236"	.323"	.048 lb

*The gap distance between profiles is .075" (1.90mm)

Material Specifications

Material	Grade	Color	Process
Nylon PA Glass Fiber Reinforced	PA6GF30	Black	Injection Molding

Suggested Hardware (Mount to T-Slot)

Part No.	Series	Qty.	Bolt	T-Nut
75-3628	15	2	M6 x 18mm FHSCS	Drop-in

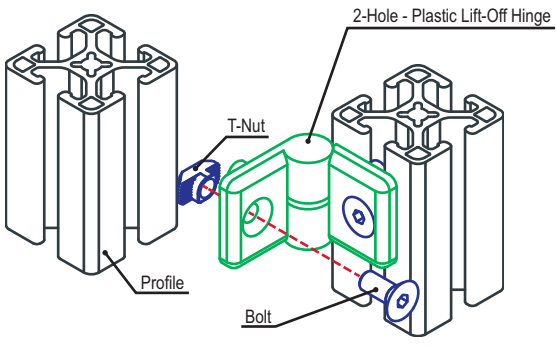

3 Hole - Plastic Double Lift-Off Hinge

Part Description:

The 3 hole - plastic double lift-off hinge comes in both right and left hand options and is made of fiberglass-reinforced black nylon with a stainless steel pin. It is commonly used with a combination of plastic panels and T-slot profiles to create adjacent access points.

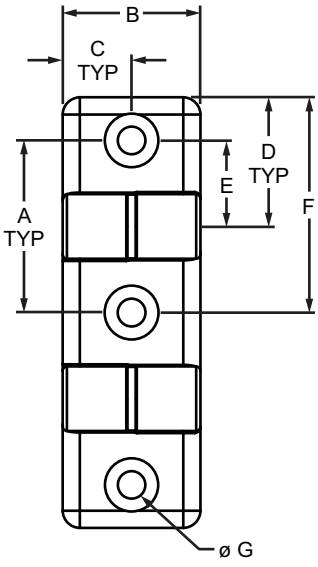

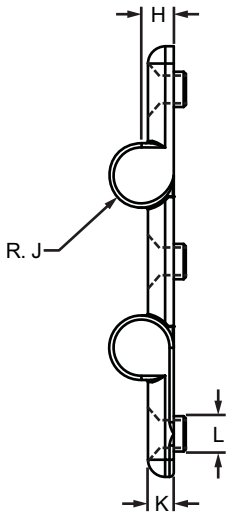

Part No.	Series	Max Load	A	B	C	D	E	F	G	H	J	K	L	Weight
12071	15	20 ft-Lbs.	1.575"	1.260"	.630"	1.181"	.787"	1.969"	.252"	.295"	.295"	.236"	.323"	.086 lb

*The gap distance between profiles is .075" (1.90mm)

Material Specifications

Material	Grade	Color	Process
Nylon PA Glass Fiber Reinforced	PA6GF30	Black	Injection Molding

Suggested Hardware (Mount to T-Slot)

Part No.	Series	Qty.	Bolt	T-Nut
75-3628	15	3	M6 x 18mm FHSCS	Drop-in

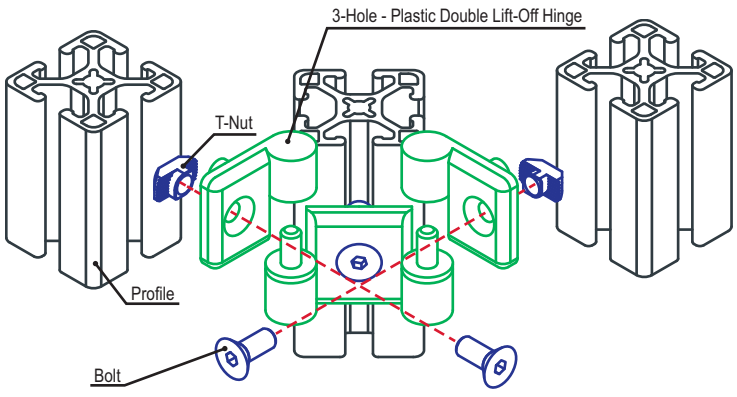

Part Description:

The 4 hole - dual hand lift-off hinge acts as both a right and left hand hinge. It is a stronger option that has a countersink on both sides to allow for right or left hand use. The 4 hole - dual hand lift-off hinge is commonly used to connect T-slot profiles.

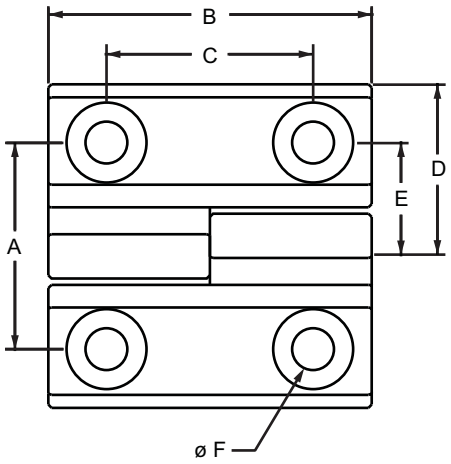

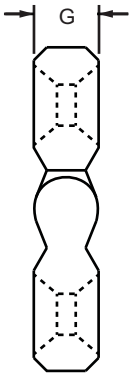

Part No.	Series	Max Load	A	B	C	D	E	F	G	Weight
12095	10 25 30	300 Nm / 221 ft-Lbs.	32.00mm	50.00mm	32.00mm	25.00mm	16.00mm	6.40mm	10.00mm	.1488 kg

Material Specifications

Material	Finish	Process	Color
Stainless-Steel	Stainless	Machined	Silver

Suggested Hardware (Mount to T-Slot)

Part No.	Series	Qty.	Bolt	T-Nut
75-3647	10 25	4	M6 x 16mm FHSCS	Roll-in
75-3591	30	4	M6 x 16mm FHSCS	Drop-in

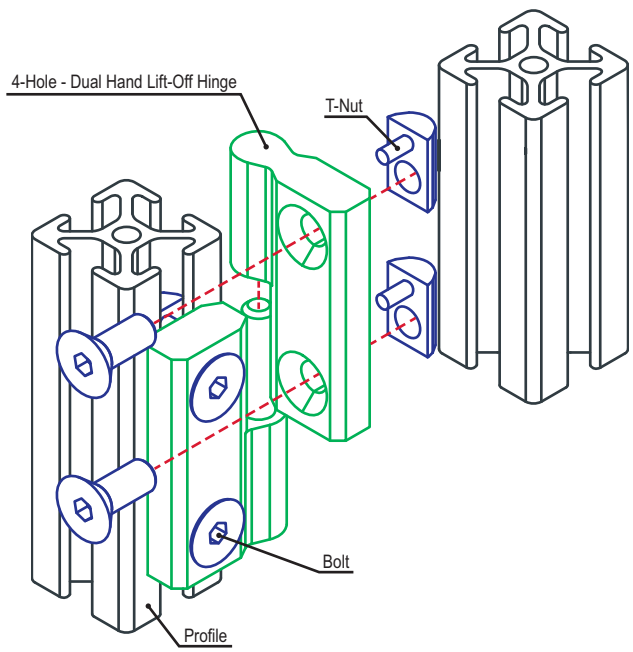

4 Hole - Adjustable Hinge

Part Description:

The 4 hole - universal, 4 hole - vertical, and 4 hole - horizontal adjustable hinges are die cast zinc with a black powder coat finish. They are commonly used to connect T-slot profiles. As their names imply, the universal hinge has both horizontal and vertical slotted holes while the vertical hinge has vertically slotted holes and the horizontal hinge has horizontally slotted holes. The slotted holes support fastening adjustments.

Universal

Vertical

Horizontal

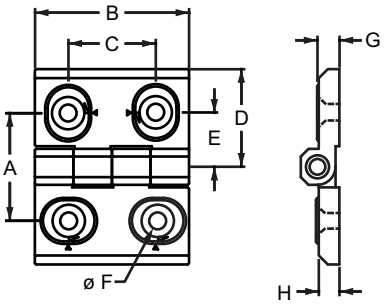

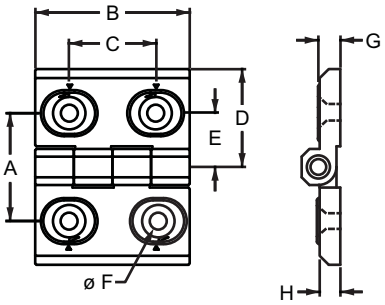

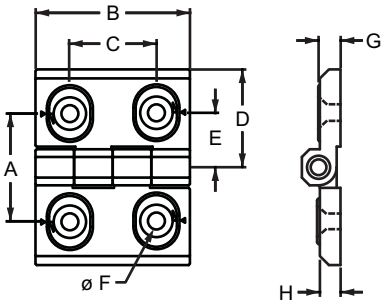

Part No.	Series	Orientation	Max Load	A	B	C	D	E	F	G	H	Weight
12068	15 40	Universal	300 Nm / 221 ft-Lbs.	42.00mm	60.00mm	34.00mm	38.00mm	21.15mm	6.50mm	8.50mm	8.00mm	.2082 kg
12069	15 40	Vertical		42.00mm	60.00mm	34.00mm	38.00mm	21.00mm	6.00mm	8.50mm	8.00mm	.2075 kg
12070	15 40	Horizontal		42.00mm	60.00mm	34.00mm	38.00mm	21.00mm	6.50mm	8.50mm	8.00mm	.2048 kg

Material Specifications

Material	Grade	Finish	Process
Zinc	Die-Cast	Black Powder Coated	Die-Casting

Suggested Hardware Per Leaf (Mount to T-Slot)

Part No.	Series	Qty.	Bolt	T-Nut
75-3628	15 40	2	M6 x 18mm FHSCS	Drop-In

Suggested Hardware Per Leaf (Mount to Panel ≤ .250" / 6mm)

Part No.	Series	Qty.	Bolt	Hex Nut	Washer
75-3589	15 40	2	M6 x 20mm FHSCS	Yes	Yes

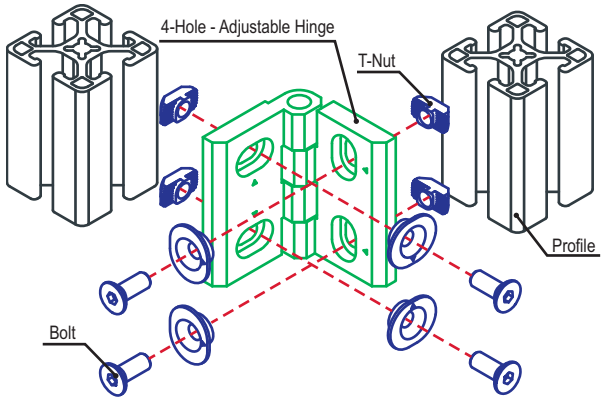

Part Description:

The 4 hole - adjustable tension panel hinge is comprised of black acetal with clear polycarbonate hinge pins. It is a durable and economical option and the adjustable pins have the ability to change the pivot tension when opening or closing an access point. The 4 hole - adjustable tension panel hinge mounts plastic panels and lightweight doors to T-slots. **Important:** This hinge is not suitable for connecting multiple T-slot profiles.

2081

2080

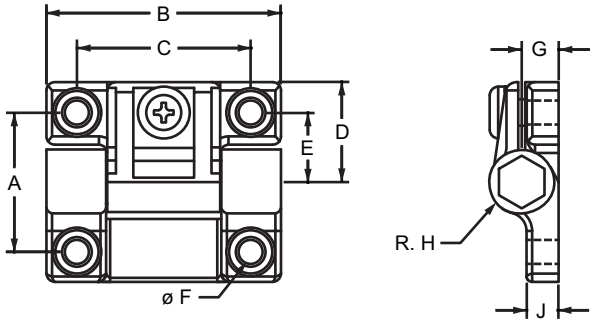

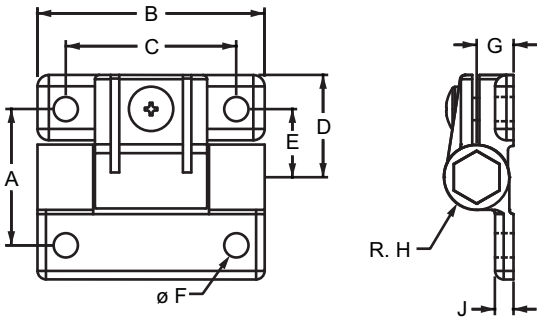

Part No.	Series	Material	Finish	Process	A	B	C	D	E	F	G	H	J	Weight
2081	10	Engineered Polymer	Matte Black	Injection Molded	1.000"	1.688"	1.250"	.719"	.500"	.172"	.266"	.234"	.230"	.031 lb
2080	15				1.500"	2.500"	1.875"	1.125"	.750"	.266"	.406"	.360"	.203"	.094 lb
25-2081	25				25.40mm	42.86mm	31.75mm	18.26mm	12.70mm	4.37mm	6.76mm	5.94mm	5.84mm	.0146 kg
40-2080	40				38.10mm	63.50mm	47.63mm	28.58mm	19.05mm	6.76mm	10.31mm	9.14mm	5.16mm	.0430 kg

Suggested Hardware Per Leaf (Mount to T-Slot)

Part No.	Series	Qty.	Bolt	T-Nut
3457	10	2	10-32 x 3/8 SHCS	Economy
3365	15	2	5/16-18 x 5/8 BHSCS	Economy
75-3401	25	2	M5 x 10mm SHCS	Economy
75-3422	40	2	M8 x 16mm BHSCS	Economy

Suggested Hardware Per Leaf (Mount to Panel ≤ .250" / 6mm)

Part No.	Series	Qty.	Bolt	Hex Nut	Washer
3459	10	2	10-32 x 5/8 SHCS	Yes	Yes
3442	15	2	5/16-18 x 3/4 BHSCS	Yes	Yes
75-3400	25	2	M5 x 16mm SHCS	Yes	Yes
75-3472	40	2	M8 x 20mm BHSCS	Yes	Yes

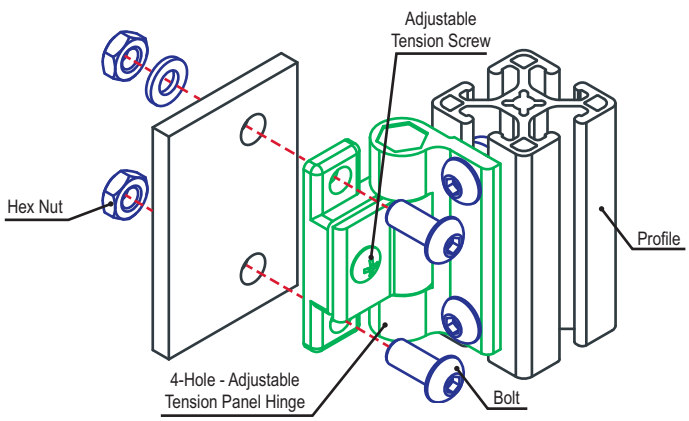

4 Hole - Detent Hinge

Part Description:

The 4 hole - detent hinge is commonly used to connect plastic panels and doors to T-slot profiles. It holds doors open at 120 or 170 degrees and is especially useful in horizontal-lifting applications, as it provides hands-free access. It includes snap-on covers that hide the hardware to mount to a panel or profile as well as a detent hinge stopper (page 473) and its mounting hardware. **Important:** This hinge is not suitable for connecting multiple T-slot profiles.

10 & 25 Series

15 & 40 Series

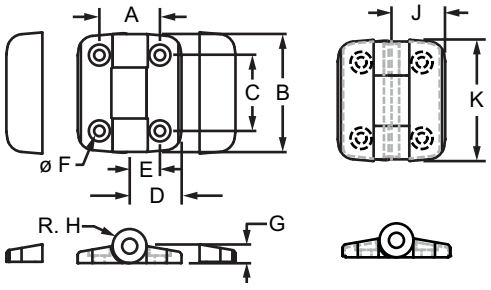

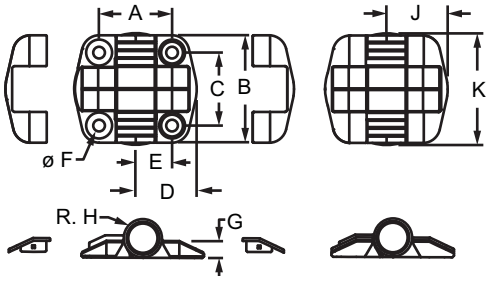

Part No.	Series	Color	A	B	C	D	E	F	G	H	J	K	Weight
2071	10	Black	1.000"	1.803"	1.252"	.791"	.492"	.177"	.283"	.264"	.839"	1.93"	.080 lb
2091	15	Black	1.339"	1.957"	1.339"	1.122"	.677"	.205"	.358"	.350"	1.122"	2.047"	.137 lb
25-2071	25	Black	25.40mm	45.80mm	31.80mm	20.10mm	12.50mm	4.50mm	7.20mm	6.70mm	21.30mm	49.00mm	.0362 kg
40-2091	40	Black	34.00mm	49.70mm	34.00mm	28.50mm	17.20mm	5.20mm	9.10mm	8.90mm	28.50mm	52.00mm	.0614 kg

Material Specifications

Material	Alloy	Finish	Process
Aluminum	6105	Anodize	Milled

Suggested Hardware Per Leaf (Mount to T-Slot)

Part No.	Series	Qty.	Bolt	T-Nut
3483	10	2	8-32 x 3/8 BHSCS	Economy
3487	15	2	10-32 x 1/2 BHSCS	Economy
75-3537	25	2	M4 x 10mm BHSCS	Economy
75-3583	40	2	M5 x 12mm BHSCS	Drop-in

Suggested Hardware Per Leaf (Mount to Panel ≤ .250" / 6mm)

Part No.	Series	Qty.	Bolt	Hex Nut	Washer
3489	10	2	8-32 x 1/2 BHSCS	Yes	Yes
3488	15	2	10-32 x 5/8 BHSCS	Yes	Yes
75-3538	25	2	M4 x 12mm BHSCS	Yes	Yes
75-3540	40	2	M5 x 16mm BHSCS	Yes	Yes

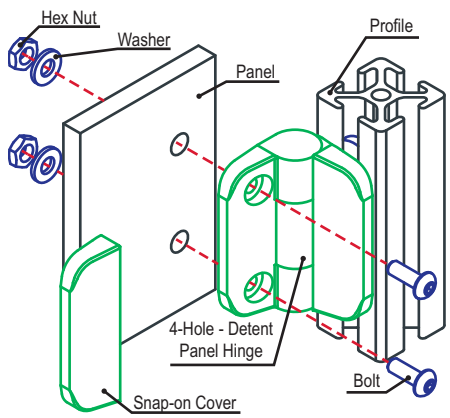

4 Hole - Detent Positioning Hinge

Part Description:

The 4 hole - detent positioning hinge is commonly used to connect plastic panels to profiles or to connect two profiles together. It holds doors open at 0, 85 or 175 degrees and is especially useful in horizontal-lifting applications, as it provides hands-free access. It has snap-on covers that hide the hardware for a clean appearance.

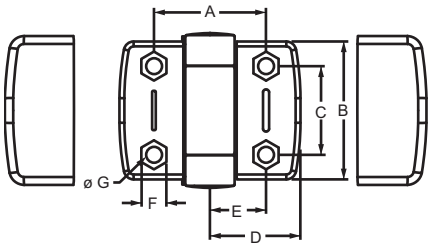

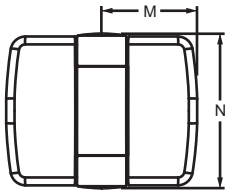

Part No.	Series	Max Load	A	B	C	D	E	F	G	H	J	K	L	M	N	Weight
12322	30	20 Nm / 14.7 Lbs.	35.50mm	56.00mm	36.00mm	27.00mm	17.75mm	10.20mm	6.40mm	10.50mm	—	10.00mm	8.00mm	27.50mm	62.80mm	.0735 kg
12326	15 40		45.50mm	56.00mm	36.00mm	36.75mm	22.75mm	10.20mm	6.40mm	10.50mm	—	10.00mm	8.00mm	38.75mm	62.80mm	.0838 kg
12327	15 40		45.50mm	56.00mm	36.00mm	36.75mm	22.75mm	10.20mm	6.40mm	10.50mm	8.00mm	10.00mm	8.00mm	38.75mm	62.80mm	.0845 kg

Material Specifications

Material	Grade	Process	Color
Nylon PA Glass Fiber Reinforced	PA6GF30	Injection Molded	Black

Suggested Hardware Per Leaf (Mount to T-Slot)

Part No.	Series	Qty.	Bolt	T-Nut
3418	15	2	1/4-20 x 5/8 BHSCS	Economy
75-3599	30	2	M6 x 10mm BHSCS	Drop-in
75-3622	40	2	M6 x 14mm BHSCS	Drop-in

Suggested Hardware Per Leaf (Mount to Panel ≤ .250" / 6mm)

Part No.	Series	Qty.	Bolt	Hex Nut	Washer
3469	15	2	1/4-20 x 3/4 BHSCS	Yes	Yes
75-3603	30	2	M6 x 14mm BHSCS	Yes	No
75-3605	40	2	M6 x 18mm BHSCS	Yes	Yes

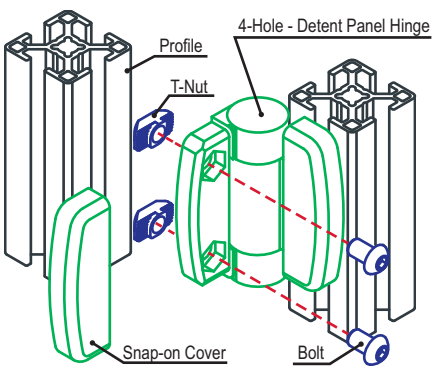

4 Hole - Constant Friction Hinge

Part Description:

The 4 hole - constant friction hinge is commonly used to connect plastic panels and doors to T-slot profiles. It holds doors open at variable angles and is especially useful for vertical-lifting smaller doors, as it provides hands-free access.

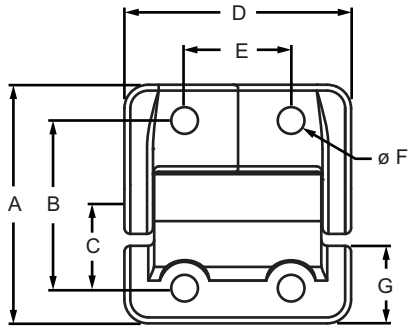

Part No.	Series	Material	Color	A	B	C	D	E	F	G	H	J	Weight
12080	10 25	Aluminum	Black	40.00mm	28.00mm	14.00mm	38.00mm	17.80mm	4.50mm	13.00mm	10.00mm	3.00mm	.0883 kg

Suggested Hardware Per Leaf (Mount to T-Slot)

Part No.	Series	Qty.	Bolt	Nut Type
75-3556	10 25	2	M4 x 10mm SHCS	Drop-In T-Nut

Suggested Hardware Per Leaf (Mount to Panel ≤ .250" / 6mm)

Part No.	Series	Qty.	Bolt	Nut Type	Washer
75-3558	10 25	2	M4 x 16mm SHCS	Hex Nut	11-6039

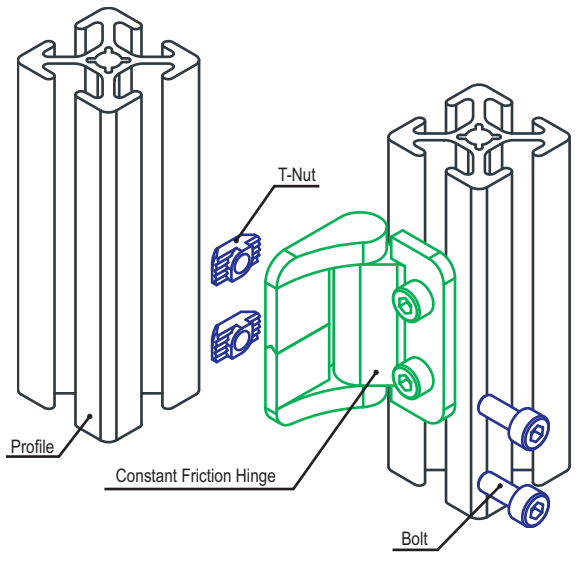

Part Description:

The 4 hole - aluminum hinge is commonly used to mount lighter weight doors or two profiles. It is a cost-effective option that is corrosion-resistant, making it useful for outdoor applications where standard hinges may rust or corrode. There are options available that can be used as a transition from 10 to 15 series or 25 to 40 series profiles.

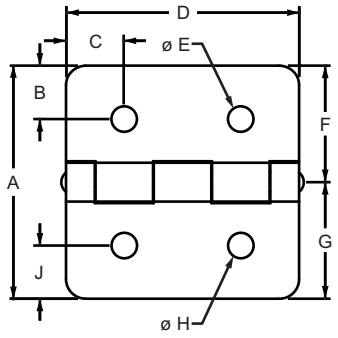

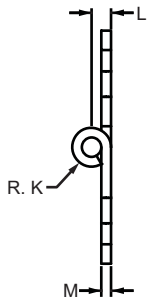

Part No.	Series	Color	Max Load	A	B	C	D	E	F	G	H	J	K	L	M	Weight
2086	10	Clear	40 lb	2.000"	.469"	.500"	2.000"	.257"	1.000"	1.000"	.257"	.469"	.167"	.167"	.078"	.040 lb
2086-Black	10	Black	40 lb	2.000"	.469"	.500"	2.000"	.257"	1.000"	1.000"	.257"	.469"	.167"	.167"	.078"	.040 lb
2085	15 RT	Clear	70 lb	3.000"	.686"	.750"	3.000"	.328"	1.500"	1.500"	.328"	.686"	.250"	.250"	.125"	.135 lb
2085-Black	15 RT	Black	70 lb	3.000"	.686"	.750"	3.000"	.328"	1.500"	1.500"	.328"	.686"	.250"	.250"	.125"	.135 lb
2084	10 to 15	Clear	75 lb	2.500"	.375"	.750"	3.000"	.257"	1.000"	1.500"	.328"	.750"	.250"	.250"	.125"	.118 lb
2084-Black	10 to 15	Black	75 lb	2.500"	.375"	.750"	3.000"	.257"	1.000"	1.500"	.328"	.750"	.250"	.250"	.125"	.118 lb
25-2086	25	Clear	18 kg	50.80mm	11.91mm	12.70mm	50.80mm	6.53mm	25.40mm	25.40mm	6.53mm	11.91mm	4.23mm	4.23mm	1.98mm	.0236 kg
25-2086-Black	25	Black	18 kg	50.80mm	11.91mm	12.70mm	50.80mm	6.53mm	25.40mm	25.40mm	6.53mm	11.91mm	4.23mm	4.23mm	1.98mm	.0236 kg
40-2085	40	Clear	34 kg	76.20mm	17.42mm	19.05mm	76.20mm	8.33mm	38.10mm	38.10mm	8.33mm	17.42mm	6.35mm	6.35mm	3.18mm	.0640 kg
40-2085-Black	40	Black	34 kg	76.20mm	17.42mm	19.05mm	76.20mm	8.33mm	38.10mm	38.10mm	8.33mm	17.42mm	6.35mm	6.35mm	3.18mm	.0640 kg
65-2084	25 to 40	Clear	34 kg	63.50mm	9.53mm	19.05mm	76.20mm	6.53mm	25.40mm	38.10mm	8.33mm	19.05mm	6.35mm	6.35mm	3.18mm	.0542 kg
65-2084-Black	25 to 40	Black	34 kg	63.50mm	9.53mm	19.05mm	76.20mm	6.53mm	25.40mm	38.10mm	8.33mm	19.05mm	6.35mm	6.35mm	3.18mm	.0542 kg

*The gap distance between profiles for 10 series is .062", 15 series is .120", 25 series is 1.97mm, 40 series is 1.15mm and for series transitions is .125" (2.42mm).

Material Specifications

Material	Leaf Alloy	Pin Alloy	Finish	Process
Aluminum	5052-H32/34	6061-T6	Anodize	Die Stamping

Suggested Hardware (Mount to T-Slot)

Part No.		Series	Qty.	Bolt	Nut Type	Washer
3386		10	4	1/4-20 x 3/8 FBHSCS	Economy T-Nut	—
3319		15	4	5/16-18 x 1/2 FBHSCS	Economy T-Nut	—
3386		10 to 15	2	1/4-20 x 3/8 FBHSCS	Economy T-Nut	—
3319			2	5/16-18 x 1/2 FBHSCS	Economy T-Nut	—
75-3515		25	4	M6 x 10mm BHSCS	Economy T-Nut	—
75-3525		40	4	M8 x 12mm BHSCS	Economy T-Nut	—
75-3515		25 to 40	2	M6 x 10mm BHSCS	Economy T-Nut	—
75-3525			2	M8 x 12mm BHSCS	Economy T-Nut	—
3961	OR	RT	4	5/16-18 x 2.000" BHSCS	Flanged Hex Nut	3760
3964		RT	4	M8 X 50mm BHSCS	Flanged Hex Nut	3860

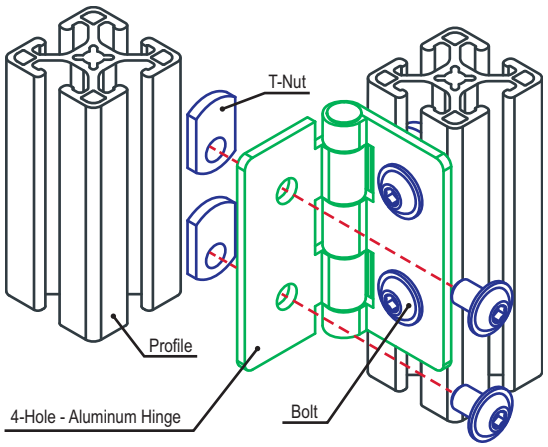

2 Hole - Standard Plastic Hinge

Part Description:

The 2 hole - standard plastic hinge is made of fiberglass-reinforced black nylon with a stainless steel pin. It is commonly used to connect plastic panels and lightweight doors to T-slot profiles.

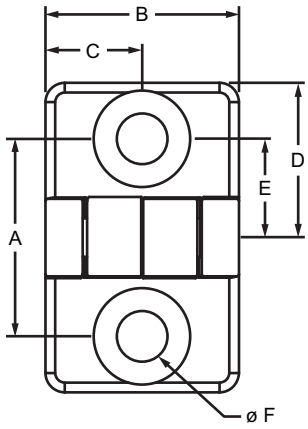

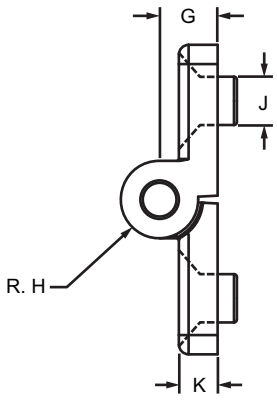

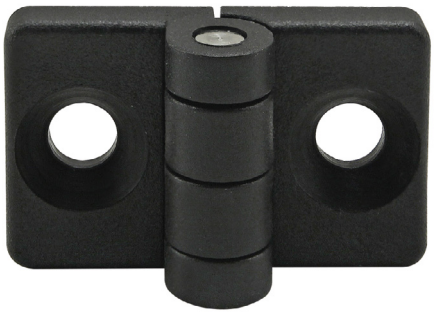

Part No.	Series	Max Load	A	B	C	D	E	F	G	H	J	K	Weight
12074	20	10 Nm / 7.3 ft-Lbs.	20.40mm	20.00mm	10.00mm	16.00mm	10.20mm	5.20mm	6.00mm	4.00mm	—	4.00mm	.0063 kg
12075	20		20.40mm	20.00mm	10.00mm	16.00mm	10.20mm	5.20mm	6.00mm	4.00mm	5.00mm	4.00mm	.0063 kg
12252	45		50.00mm	40.00mm	20.00mm	45.00mm	25.00mm	6.50mm	9.00mm	8.00mm	10.00mm	8.50mm	.0471 kg

Material Specifications

Part No.	Material	Grade	Color	Process
12074	Nylon PA Glass Fiber Reinforced	PA6GF30	Black	Injection Molding
12075			Black	
12252			Black/Bolt Plain	

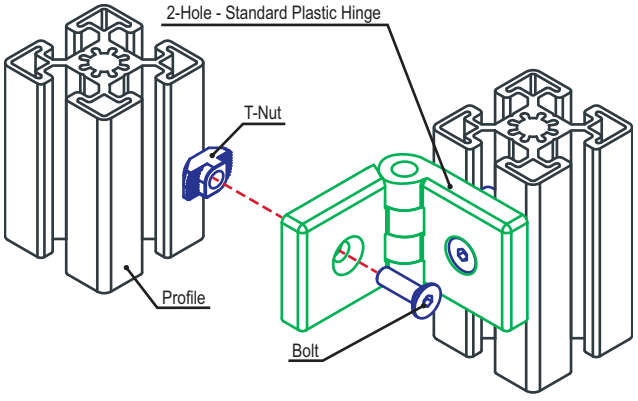

Suggested Hardware Per Leaf (Mount to T-Slot)

Part No.	Series	Qty.	Bolt	T-Nut
75-3571	20	1	M5 x 8mm FHSCS	Economy
75-3588	45	1	M6 x 20mm FHSCS	Drop-in

Suggested Hardware Per Leaf (Mount to Panel ≤ .250" / 6mm)

Part No.	Series	Qty.	Bolt	Hex Nut	Washer
75-3573	20	1	M5 x 14mm FHSCS	Yes	Yes
75-3589	45	1	M6 x 20mm FHSCS	Yes	Yes

4 Hole - Standard Plastic Hinge

Part Description:

The 4 hole - standard plastic hinge is made of fiberglass-reinforced black nylon with a stainless steel pin. It is commonly used to connect plastic panels and lightweight doors to T-slot profiles.

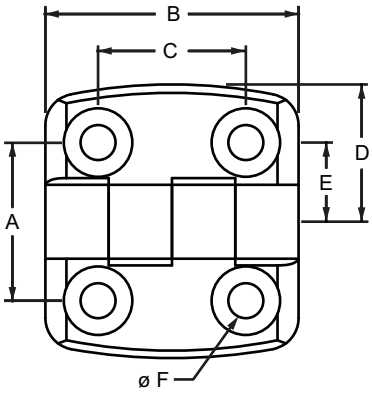

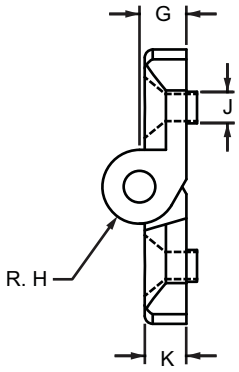

Part No.	Series	Material	Color	Process	Max Load	A	B	C	D	E	F	G	H	J	K	Weight
12067	20	Nylon PA Glass Fiber Reinforced	Black	Injection Molding	30 Nm / 22 ft-Lbs.	23.00mm	30.00mm	14.00mm	19.50mm	11.50mm	4.50mm	5.50mm	4.00mm	—	5.00mm	.0077 kg
12098	10 25					30.00mm	48.00mm	28.00mm	26.00mm	15.00mm	6.60mm	8.95mm	7.00mm	—	7.40mm	.0336 kg
12099	10 25					30.00mm	48.00mm	28.00mm	26.00mm	15.00mm	6.60mm	8.90mm	7.00mm	6.00mm	7.90mm	.0321 kg
12107	30					35.00mm	48.00mm	28.00mm	29.50mm	17.50mm	6.60mm	8.90mm	7.00mm	—	8.40mm	.0353 kg
12108	30					35.00mm	48.00mm	28.00mm	29.50mm	17.50mm	6.60mm	8.90mm	7.00mm	7.76mm	8.20mm	.0336 kg
12116	15				25 ft-Lbs.	40.00mm	48.00mm	28.00mm	35.50mm	20.00mm	6.40mm	9.00mm	7.00mm	—	8.00mm	.0392 kg
12117	15					40.00mm	48.00mm	28.00mm	35.50mm	20.00mm	6.60mm	8.90mm	7.00mm	8.00mm	7.90mm	.0396 kg
12125	15 40				40 Nm / 30 ft-Lbs.	45.00mm	48.00mm	28.00mm	38.50mm	22.50mm	6.60mm	8.90mm	7.00mm	—	7.40mm	.0404 kg
12126	15 40					45.00mm	48.00mm	28.00mm	38.50mm	22.50mm	6.60mm	8.90mm	7.00mm	7.76mm	7.90mm	.0404 kg
12134	45				40 Nm / 29 ft-Lbs.	50.00mm	48.00mm	28.00mm	43.50mm	25.00mm	6.60mm	8.90mm	7.00mm	7.76mm	7.70mm	.0467 kg
12136	45					50.00mm	48.00mm	28.00mm	43.50mm	25.00mm	6.60mm	8.90mm	7.00mm	9.72mm	7.90mm	.0467 kg

*The gap distance between profiles is .075" (1.90mm)

Suggested Hardware Per Leaf (Mount to T-Slot)

Part No.	Series	Qty.	Bolt	T-Nut
3419	10	2	1/4-20 x 1/2 FHSCS	Economy
3409	15	2	1/4-20 x 5/8 FHSCS	Drop-in
75-3552	20	2	M4 x 10mm FHSCS	Economy
75-3616	25	2	M6 x 14mm FHSCS	Economy
75-3585	30	2	M6 x 14mm FHSCS	Drop-in
75-3628	40	2	M6 x 18mm FHSCS	Drop-in
75-3587	45	2	M6 x 18mm FHSCS	Drop-in

Suggested Hardware Per Leaf (Mount to Panel ≤ .250" / 6mm)

Part No.	Series	Qty.	Bolt	Hex Nut	Washer
3417	10 15	2	1/4-20 x 3/4 FHSCS	Yes	Yes
75-3562	20	2	M4 x 12mm FHSCS	Yes	Yes
75-3589	25 30 40 45	2	M6 x 20mm FHSCS	Yes	Yes

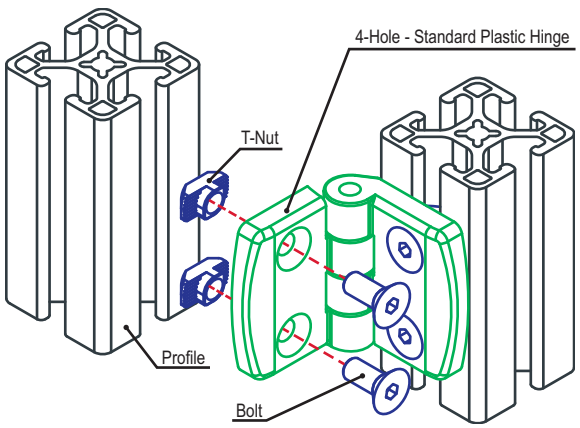

4 Hole - Horizontal Adjustment Plastic Hinge

Part Description:

The 4 hole - horizontal adjustment plastic hinge is made of fiberglass-reinforced black nylon with a stainless steel pin. It is commonly used to connect plastic panels and lightweight doors to T-slot profiles. It has horizontally slotted holes to support adjustments. The suggested hardware to mount the hinge to a T-slot profile can be found below.

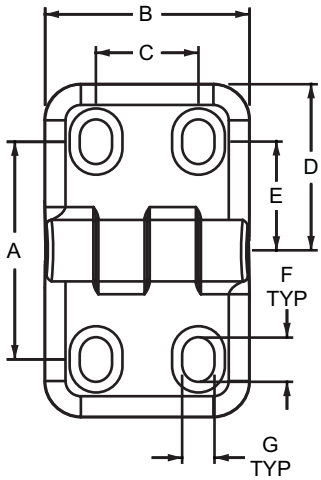

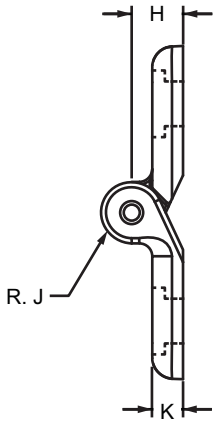

Part No.	Series	Max Load	A	B	C	D	E	F	G	H	J	K	Weight
12254	15 40	17 Nm / 12.5 ft-Lbs.	42.50mm	40.00mm	20.00mm	32.50mm	21.25mm	8.70mm	6.20mm	10.00mm	6.00mm	6.00mm	.0232 kg

Material Specifications

Material	Grade	Color	Process
Nylon PA Glass Fiber Reinforced	PA6GF30	Black/Bolt Plain	Injection Molding

Suggested Hardware Per Leaf (Mount to T-Slot)

Part No.	Series	Qty.	Bolt	T-Nut
3418	15	2	1/4-20 x 5/8 BHSCS	Economy
75-3622	40	2	M6 x 14mm BHSCS	Drop-in

Suggested Hardware Per Leaf (Mount to Panel ≤ .250" / 6mm)

Part No.	Series	Qty.	Bolt	Hex Nut	Washer
3469	15	2	1/4-20 x 3/4 BHSCS	Yes	Yes
75-3605	40	2	M6 x 18mm BHSCS	Yes	Yes

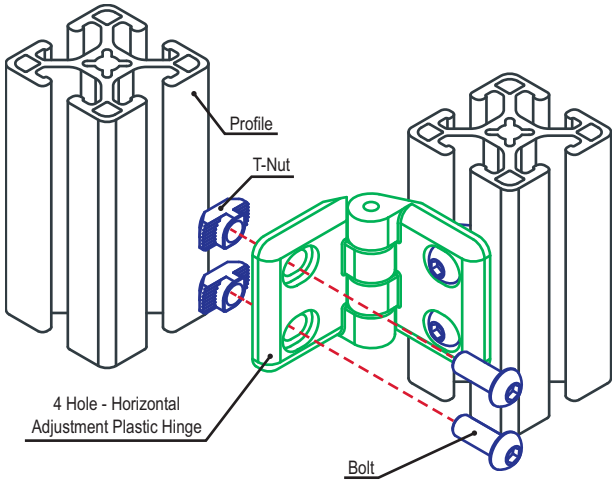

4 Hole - Standard Plastic Hinge with Snap Cover

Part Description:

The 4 hole - standard plastic hinge with snap cover is made of fiberglass-reinforced black nylon with a die-cast zinc pin. It has a snap-on cover that hides the mounting hardware to provide a clean look. It is commonly used to connect plastic panels and lightweight doors to T-slot profiles. The suggested hardware to mount the hinge to a T-slot profile can be found below.

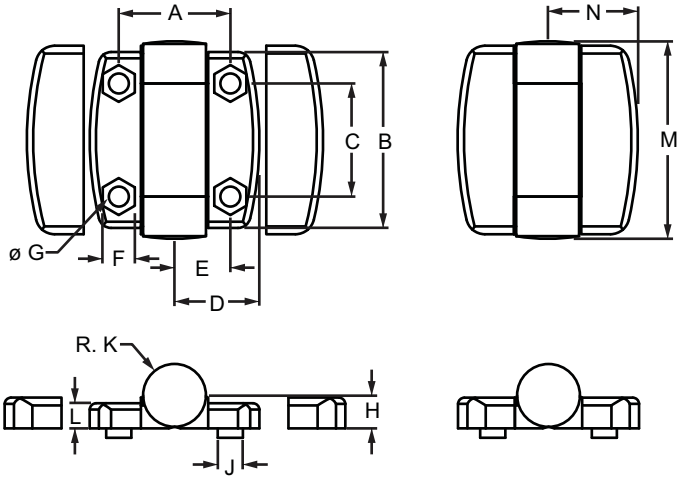

Part No.	Series	Max Load	A	B	C	D	E	F	G	H	J	K	L	M	N	Weight
12162	30	20 Nm / 14.7 ft-Lbs.	35.50mm	56.00mm	36.00mm	27.00mm	17.75mm	10.20mm	6.40mm	10.50mm	—	20.00mm	8.00mm	62.80mm	28.80mm	.0327 kg
12165	15 40		45.50mm	56.00mm	36.00mm	36.75mm	22.75mm	10.20mm	6.40mm	10.50mm	—	20.00mm	8.00mm	62.80mm	38.60mm	.0549 kg

Material Specifications

Material	Grade	Color	Process
Nylon PA Glass Fiber Reinforced	PA6GF30	Black	Injection Molding

Suggested Hardware Per Leaf (Mount to T-Slot)

Part No.	Series	Qty.	Bolt	T-Nut
3418	15	2	1/4-20 x 5/8 BHSCS	Economy
75-3599	30	2	M6 x 10mm BHSCS	Drop-in
75-3622	40	2	M6 x 14mm BHSCS	Drop-in

Suggested Hardware Per Leaf (Mount to Panel ≤ .250" / 6mm)

Part No.	Series	Qty.	Bolt	Hex Nut	Washer
3469	15	2	1/4-20 x 3/4 BHSCS	Yes	Yes
75-3603	30	2	M6 x 14mm BHSCS	Yes	No
75-3605	40	2	M6 x 18mm BHSCS	Yes	Yes

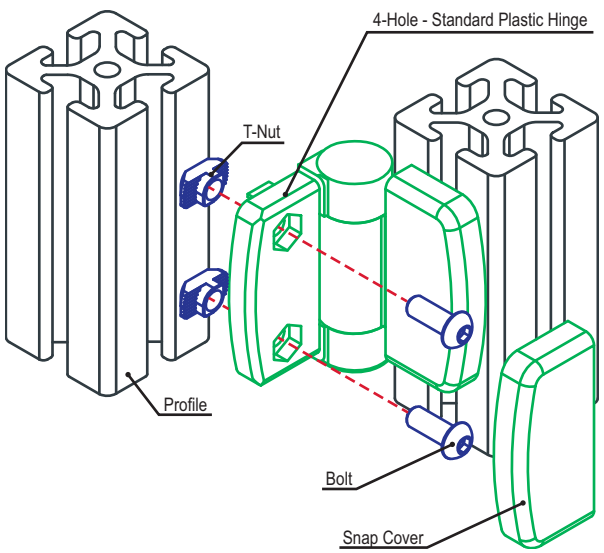

4 Hole - Economy Zinc Hinge

Part Description:

The 4 hole - economy zinc hinge is made of die-cast zinc with a black powder coat finish. It is a higher-strength hinge that is commonly used to connect doors and plastic panels to T-slot profiles. The suggested hardware to mount the hinge to a T-slot profile can be found below.

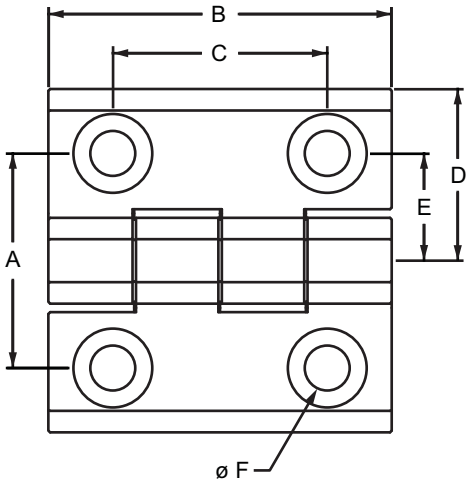

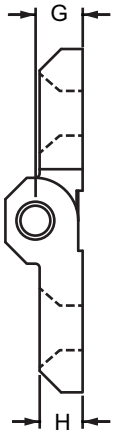

Part No.	Series	Max Load	A	B	C	D	E	F	G	H	Weight
12255	20	50 Nm / 36.8 ft-Lbs.	25.00mm	40.00mm	25.00mm	20.00mm	12.50mm	5.20mm	5.50mm	5.00mm	.0465 kg
12256	10 25	50 Nm / 36.8 ft-Lbs.	30.00mm	50.00mm	30.00mm	25.00mm	15.00mm	6.30mm	6.50mm	6.00mm	.0920 kg
12062	30	60 Nm / 44.0 ft-Lbs.	36.00mm	60.00mm	36.00mm	30.00mm	18.00mm	8.30mm	8.00mm	8.00mm	.1153 kg

Material Specifications

Material	Grade	Finish	Process
Zinc	Die-Cast	Black Powder Coat	Die-Casting

Suggested Hardware Per Leaf (Mount to T-Slot)

Part No.	Series	Qty.	Bolt	T-Nut
3414	10	2	1/4-20 x 1/2 FHSCS	Economy
75-3572	20	2	M5 x 10mm FHSCS	Economy
75-3584	25	2	M6 x 14mm FHSCS	Slide-in
75-3585	30	2	M6 x 14mm FHSCS	Drop-in

Suggested Hardware Per Leaf (Mount to Panel ≤ .250" / 6mm)

Part No.	Series	Qty.	Bolt	Hex Nut	Washer
11-5716	20	2	M5 x 16mm FHSCS	11-5065	11-6040
11-6718	10 25	2	M6 x 18mm FHSCS	11-6065	11-6041
11-8716	30	2	M8 x 18mm FHSCS	11-8065	11-6042

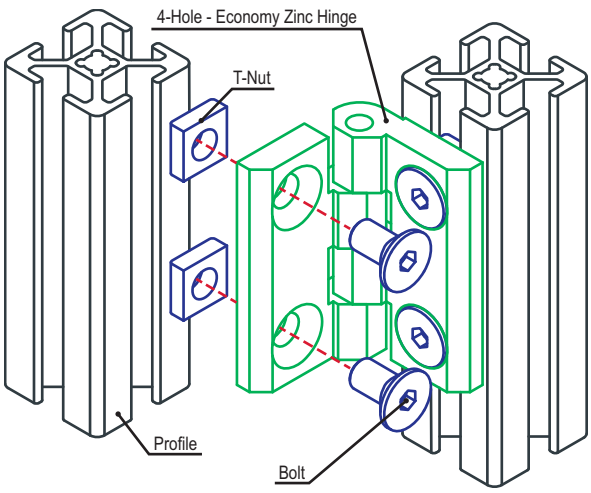

Part Description:

The 4 hole - transition hinge is available in stainless steel or black powder-coat zinc. It is commonly used to mount larger doors or two profiles. This hinge can be used as a transition from 30 to 45 series profiles and can be easily assembled with the suggested mounting hardware listed below.

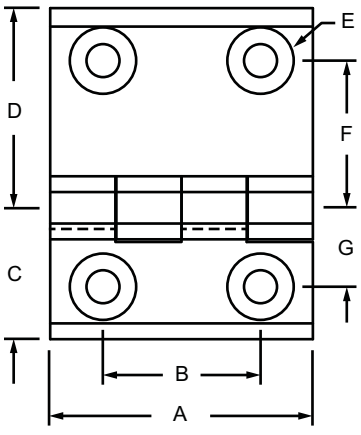

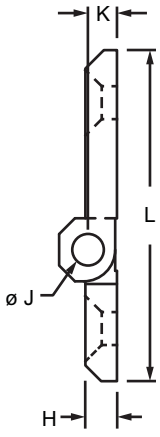

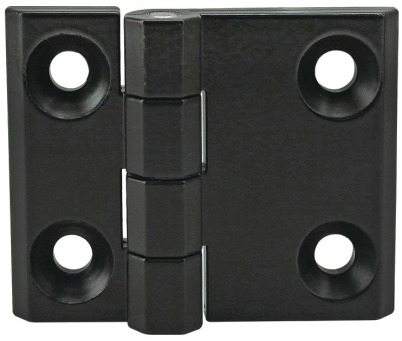

Part No.	Series	Max Load	A	B	C	D	E	F	G	H	J	K	L	Weight
12064	30 to 45	60 Nm / 44 ft-Lbs.	50.00mm	30.00mm	25.00mm	38.00mm	M6 FHSCS	28.00mm	15.00mm	6.00mm	6.00mm	6.00mm	63.00mm	.1049 kg
12065	30 to 45		50.00mm	30.00mm	25.00mm	38.00mm	M6 FHSCS	28.00mm	15.00mm	6.00mm	6.00mm	6.00mm	63.00mm	.1283 kg

Material Specifications

Part No.	Material	Grade	Finish	Process
12064	Zinc	Zn Al Cu 1	Black Powder Coat	Die-Casting
12065	Stainless-Steel	316	Stainless	Die-Casting

Suggested Hardware Per Leaf (Mount to T-Slot)

Part No.	Series	Qty.	Bolt	T-Nut
75-3585	30 AND 45	2	M6 x 14mm FHSCS	Drop-In
75-3587		2	M6 x 18mm FHSCS	Drop-In

Suggested Hardware Per Leaf (Mount to Panel ≤ .250" / 6mm)

Part No.	Series	Qty.	Bolt	Hex Nut	Washer
11-6718	30 45	2	M6 x 18mm FHSCS	11-6065	11-6041

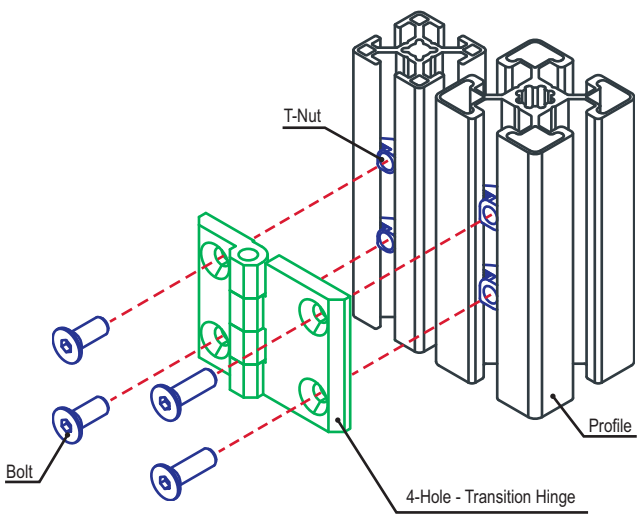

4 Hole - Standard Stainless Steel Hinge

Part Description:

The 4 hole - standard stainless steel hinge is made of stainless steel. It is a higher-strength hinge that is commonly used to connect doors and plastic panels to T-slot profiles. The suggested hardware to mount the hinge to a T-slot profile can be found below.

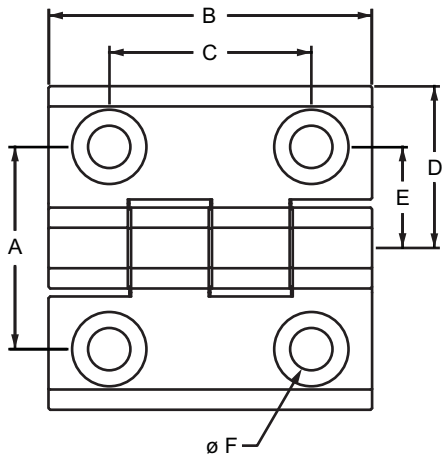

Part No.	Series	Max Load	A	B	C	D	E	F	G	H	Weight
12093	20	50 Nm / 36.8 ft-Lbs.	25.00mm	40.00mm	25.00mm	20.00mm	12.50mm	5.20mm	5.50mm	5.00mm	.0539 kg
12094	10 25	50 Nm / 36.8 ft-Lbs.	30.00mm	50.00mm	30.00mm	25.00mm	15.00mm	6.30mm	6.50mm	6.00mm	.0970 kg
12096	30	60 Nm / 44.0 ft-Lbs.	36.00mm	60.00mm	36.00mm	30.00mm	18.00mm	8.30mm	8.00mm	8.00mm	.0952 kg

Material Specifications

Material	Finish	Process
Stainless-Steel	Stainless	Machined

Suggested Hardware Per Leaf (Mount to T-Slot)

Part No.	Series	Qty.	Bolt	T-Nut
3639	10	2	1/4-20 x 1/2 FHSCS	Standard
75-3572	20	2	M5 x 10mm FHSCS	Economy
75-3639	25	2	M6 x 12mm FHSCS	Standard
75-3585	30	2	M6 x 14mm FHSCS	Drop-in

Suggested Hardware Per Leaf (Mount to Panel ≤ .250" / 6mm)

Part No.	Series	Qty.	Bolt	Hex Nut	Washer
11-5716	20	2	M5 x 16mm FHSCS	11-5065	11-6040
11-6718	10 25	2	M6 x 18mm FHSCS	11-6065	11-6041
11-8720	30	2	M8 x 20mm FHSCS	11-8065	11-6042

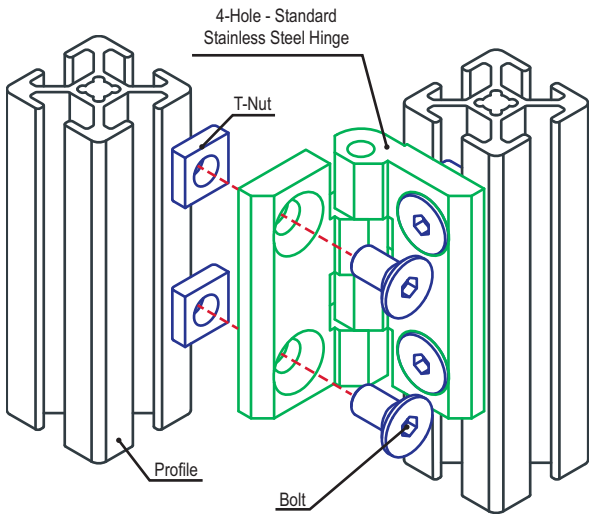

Part Description:

The 4 hole - zinc hinge is die-cast black powder-coated zinc with a stainless steel pin. It is a higher-strength hinge that is commonly used to connect doors and plastic panels to T-slot profiles. The suggested hardware to mount the hinge to a T-slot profile can be found below.

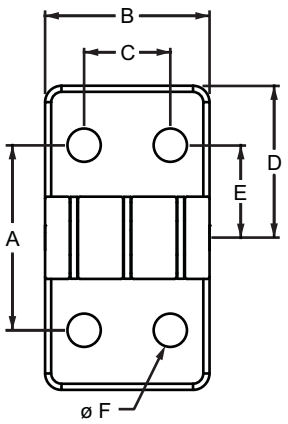

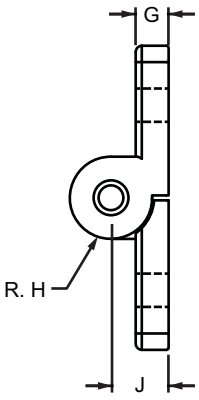

Part No.	Series	A	B	C	D	E	F	G	H	J	Weight
4489	15	1.771"	1.574"	.826"	1.457"	.885"	.323"	.314"	.393"	.551"	.426 lb
40-4489	40	45.00mm	40.00mm	21.00mm	37.00mm	22.50mm	8.20mm	8.00mm	10.00mm	14.00mm	.1940 kg

Material Specifications

Material	Grade	Finish	Process
Zinc	Die-Cast	Black Powder Coat	Die-Casting

Suggested Hardware Per Leaf (Mount to T-Slot)

Series	Part No.	Qty.	Bolt	Part No.	Qty.	T-Nut
15	3114	2	5/16-18 x 3/4 BHSCS	3203	2	Standard
40	11-8518	2	M8 x 18mm SHCS	40-1984	2	Standard

Suggested Hardware Per Leaf (Mount to Panel ≤ .250" / 6mm)

Part No.	Series	Qty.	Bolt	Hex Nut	Washer
3117	15	2	5/16-18 x 7/8 BHSCS	3214	3260
11-8320	40	2	M8 x 20mm BHSCS	11-8065	11-6042

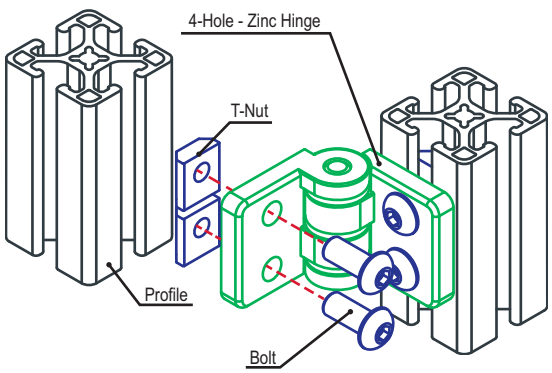

4 Hole - Locking Zinc Hinge

Part Description:

The 4 hole - locking zinc hinge is die-cast black powder-coated zinc with a stainless steel pin. It is a higher-strength hinge that is commonly used to connect doors and plastic panels to T-slot profiles. The 4 hole - locking zinc hinge features a ratcheting clamp handle for locking the hinge in position. The suggested hardware to mount the hinge to a T-slot profile can be found below.

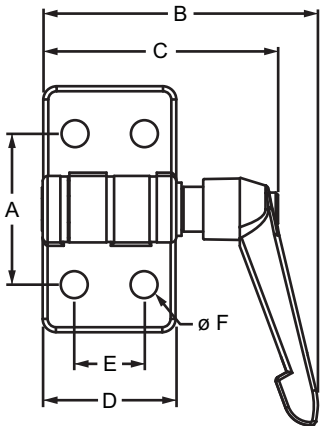

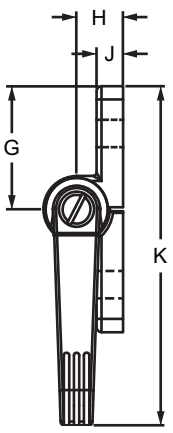

Part No.	Series	A	B	C	D	E	F	G	H	J	K	Weight
4488	15	1.771"	3.252"	2.780"	1.574"	.827"	.323"	1.457"	.551"	.315"	4.016"	.499 lb
40-4488	40	45.40mm	82.60mm	70.60mm	40.00mm	21.00mm	8.20mm	37.00mm	14.00mm	8.00mm	102.00mm	.2280 kg

Material Specifications

Material	Grade	Finish	Process
Zinc	Die-Cast	Black Powder Coat	Die-Casting

Suggested Hardware Per Leaf (Mount to T-Slot)

Series	Part No.	Qty.	Bolt	Part No.	Qty.	T-Nut
15	3114	2	5/16-18 x 3/4 BHSCS	3203	2	Standard
40	11-8518	2	M8 x 18mm SHCS	40-1984	2	Standard

Suggested Hardware Per Leaf (Mount to Panel ≤ .250" / 6mm)

Part No.	Series	Qty.	Bolt	Hex Nut	Washer
3117	15	2	5/16-18 x 7/8 BHSCS	3214	3260
11-8320	40	2	M8 x 20mm BHSCS	11-8065	11-6042

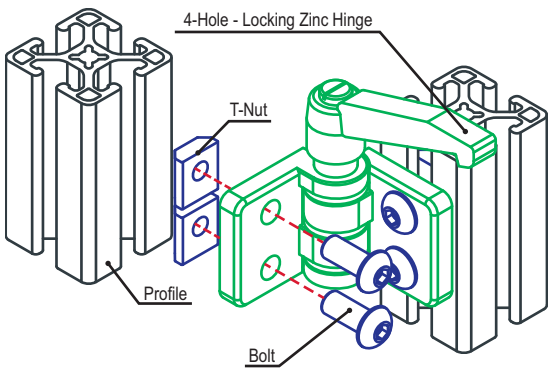

Part Description:

The 4 hole - slotted zinc hinge is die-cast black powder-coated zinc with a stainless steel pin. It is a higher-strength hinge that is commonly used to connect doors and plastic panels to T-slot profiles. The hinge has slotted holes to support adjustments and is available in options with slot tabs to assist with alignment. The suggested hardware to mount the hinge to a T-slot profile can be found below.

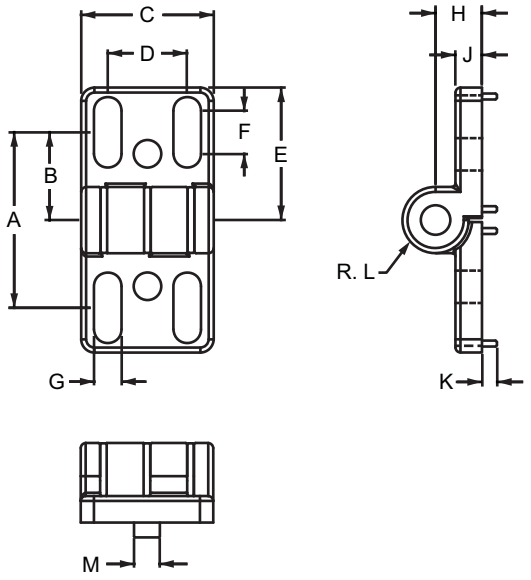

Part No.	Series	Max Load	A	B	C	D	E	F	G	H	J	K	L	M	Weight
12084	15 40 45	250 Nm / 184 ft-Lbs.	53.00mm	26.50mm	40.00mm	24.00mm	40.00mm	13.00mm	8.30mm	14.00mm	8.00mm	—	10.00mm	—	.1816 kg
12088	15 40		53.00mm	26.50mm	40.00mm	24.00mm	40.00mm	13.00mm	8.30mm	14.00mm	8.00mm	4.50mm	10.00mm	7.80mm	.1679 kg
12089	45		53.00mm	26.50mm	40.00mm	24.00mm	40.00mm	13.00mm	8.30mm	14.00mm	8.00mm	4.50mm	10.00mm	9.80mm	.1866 kg

Material Specifications

Material	Grade	Finish	Process
Zinc	Die-Cast	Black Powder Coat	Die-Casting

Suggested Hardware Per Leaf (Mount to T-Slot)

Part No.	Series	Qty.	Bolt	T-Nut
3455	15	2	5/16-18 x 3/4 SHCS	Economy
75-3627	40	2	M8 x 18mm SHCS	Slide-in
75-3630	45	2	M8 x 20mm SHCS	Drop-in

Suggested Hardware Per Leaf (Mount to Panel ≤ .250" / 6mm)

Part No.	Series	Qty.	Bolt	Hex Nut	Washer
3117	15	2	5/16-18 x 7/8 BHSCS	3214	3260
11-8320	40 45	2	M8 x 20mm BHSCS	11-8065	11-6042

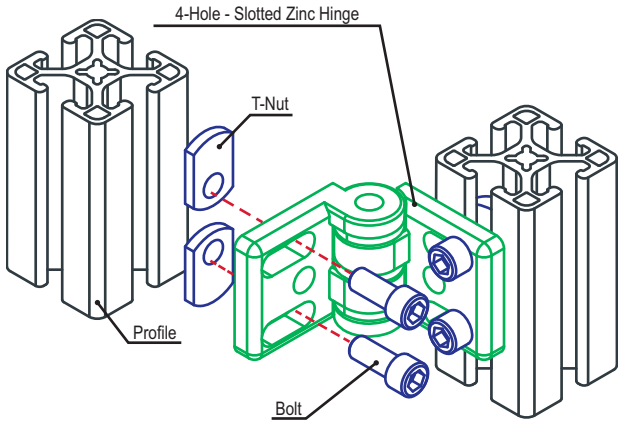

4 Hole - Slotted Locking Zinc Hinge

Part Description:

The 4 hole - slotted locking zinc hinge is die-cast black powder-coated zinc with a stainless steel pin. It is a higher-strength hinge that is commonly used to connect doors and plastic panels to T-slot profiles. The hinge has slotted holes to support adjustments and a ratcheting clamp handle for locking the hinge in position. It also features slot tabs to assist with alignment. The suggested hardware to mount the hinge to a T-slot profile can be found below.

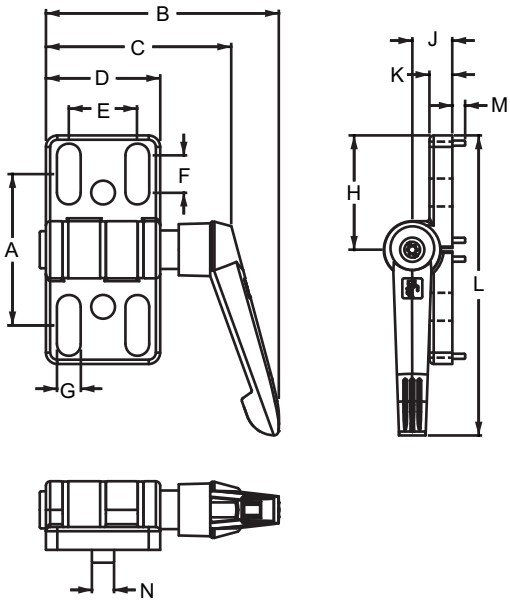

Part No.	Series	Max Load	A	B	C	D	E	F	G	H	J	K	L	M	N	Weight
12085	15 40 45	250 Nm / 184 ft-Lbs.	53.00mm	81.00mm	69.00mm	40.00mm	24.00mm	13.00mm	8.30mm	40.00mm	14.00mm	8.00mm	105.00mm	—	—	.2155 kg
12086	15 40		53.00mm	81.60mm	65.00mm	40.00mm	24.00mm	13.00mm	8.30mm	40.00mm	14.00mm	8.00mm	105.00mm	4.50mm	7.80mm	.2132 kg
12087	45		53.00mm	81.00mm	69.00mm	40.00mm	24.00mm	13.00mm	8.30mm	40.00mm	14.00mm	8.00mm	105.00mm	4.50mm	10.00mm	.2092 kg

Material Specifications

Material	Grade	Finish	Process
Zinc	Die-Cast	Black Powder Coat	Die-Casting

Suggested Hardware Per Leaf (Mount to T-Slot)

Part No.	Series	Qty.	Bolt	T-Nut
3455	15	2	5/16-18 x 3/4 SHCS	Economy
75-3627	40	2	M8 x 18mm SHCS	Slide-in
75-3630	45	2	M8 x 20mm SHCS	Drop-in

Suggested Hardware Per Leaf (Mount to Panel ≤ .250" / 6mm)

Part No.	Series	Qty.	Bolt	Hex Nut	Washer
3117	15	2	5/16-18 x 7/8 BHSCS	3214	3260
11-8320	40 45	2	M8 x 20mm BHSCS	11-8065	11-6042

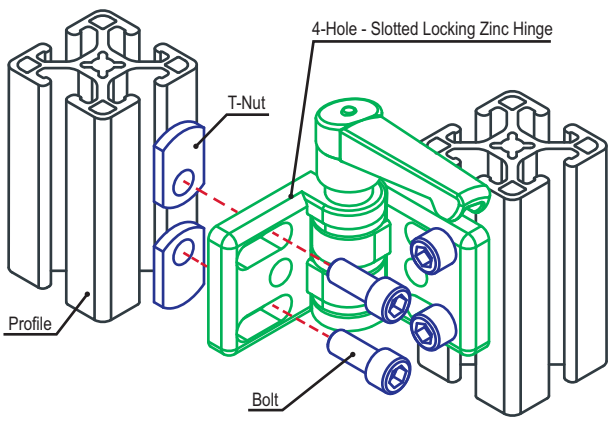

Part Description:

The lite panel hinge is made of steel with a black powder coat. It is a cost-effective option that is commonly used to mount plastic panel doors and lightweight T-slot profiles. The slotted holes allow for greater adjustability when positioning the hinge. It includes the bolt assembly to mount to a .250" (6mm) panel. The suggested hardware to mount to a T-slot profile can be found below.

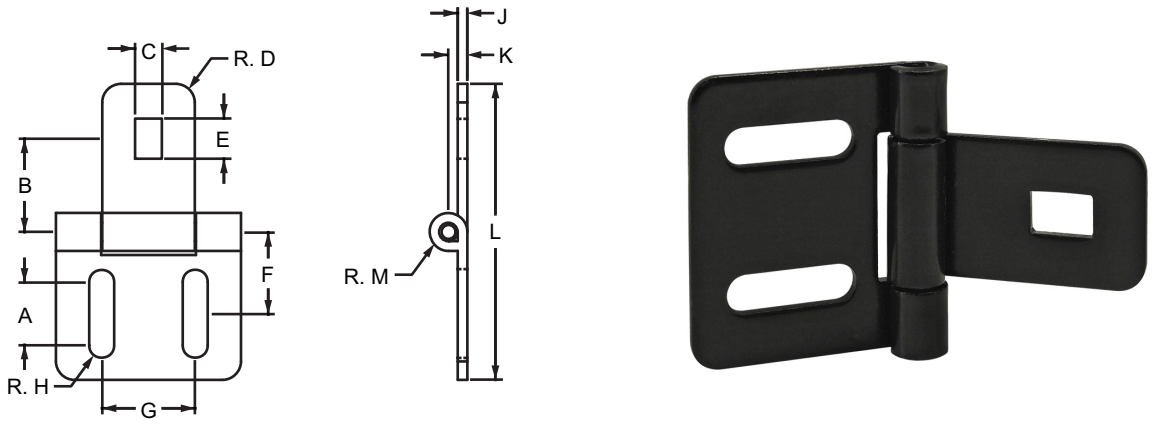

Part No.	Series	Max Load	A	B	C	D	E	F	G	H	J	K	L	M	Weight
12097	15 40	25 Nm / 18.0 ft-Lbs.	13.60mm	20.15mm	6.80mm	4.00mm	8.70mm	17.70mm	20.20mm	2.70mm	4.10mm	2.10mm	64.00mm	4.10mm	.0526 kg

Material Specifications

Material	Grade	Finish	Process
Steel	Die-Cast	Black Powder Coat	Die-Casting

Included Hardware (Mount to Panel ≤ .250" / 6mm)

Series	Qty.	Bolt	Qty.	T-Nut	Qty.	Washer
15 40	1	M5 Screw	1	M5 Hex Nut	1	M5 Washer

Suggested Hardware (Mount to T-Slot)

Part No.	Series	Qty.	Bolt	T-Nut
3487	15	2	10-32 x 1/2 BHSCS	Slide-in
75-3583	40	2	M5 x 12mm BHSCS	Drop-in

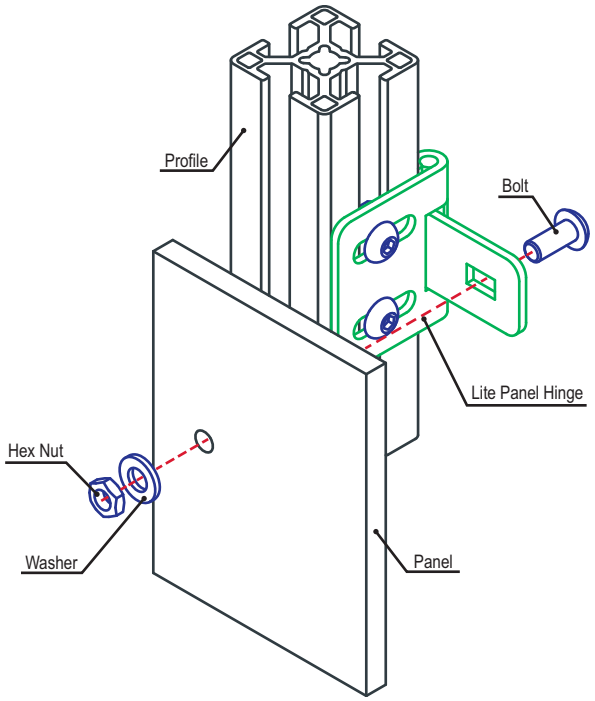

Plastic Door Handle

Part Description:

The plastic door handle is made of light yet durable high-strength glass-filled nylon. It is corrosion-resistant, lending it to both indoor and outdoor applications. The plastic door handle is designed to mount directly to a T-slot profile or can also be used with a plastic panel. See below for the suggested mounting hardware.

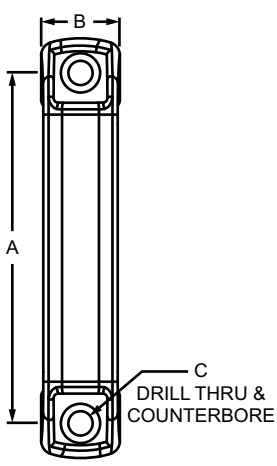

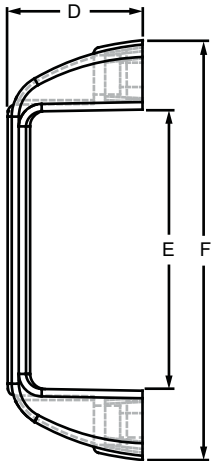

Part No.	Series	Material	Finish	Process	Color	A	B	C	D	E	F	Weight
2062	10	Glass-Filled Nylon	Textured	Molded	Black	3.681"	.827"	1/4	1.417"	2.953"	4.409"	.048 lb
2882	10				Red	3.681"	.827"	1/4	1.417"	2.953"	4.409"	.060 lb
2061	15				Black	4.606"	1.024"	5/16	1.614"	3.779"	5.472"	.079 lb
2881	15				Red	4.606"	1.024"	5/16	1.614"	3.779"	5.472"	.093 lb
2060	15				Black	7.047"	1.102"	5/16	1.969"	6.181"	8.189"	.178 lb
2880	15				Red	7.047"	1.102"	5/16	1.969"	6.181"	8.189"	.168 lb
25-2062	25 30				Black	93.50mm	21.00mm	M6	36.00mm	75.00mm	112.00mm	.0213 kg
25-2882	25 30				Red	93.50mm	21.00mm	M6	36.00mm	75.00mm	112.00mm	.0273 kg
40-2061	40				Black	117.00mm	26.00mm	M8	41.00mm	96.00mm	139.00mm	.0262 kg
40-2881	40				Red	117.00mm	26.00mm	M8	41.00mm	96.00mm	139.00mm	.0426 kg
40-2060	40				Black	179.00mm	28.00mm	M8	50.00mm	157.00mm	208.00mm	.0812 kg
40-2880	40				Red	179.00mm	28.00mm	M8	50.00mm	157.00mm	208.00mm	.0749 kg

Suggested Hardware (Mount to T-Slot)

Part No.	Series	Qty.	Bolt	T-Nut
3491	10	2	1/4-20 x 1/2" SHCS	Economy
3455	15	2	5/16-18 x 3/4" SHCS	Economy
75-3521	25 30	2	M6 x 12mm SHCS	Economy
75-3634	40	2	M8 x 18mm SHCS	Economy

Suggested Hardware (Mount to Panel ≤ .250" / 6mm)

Part No.	Series	Qty.	Bolt	T-Nut
3315	10	2	1/4-20 x 7/8" SHCS & Washer	Hex Nut
3473	15	2	5/16-18 x 1" SHCS & Washer	Hex Nut
75-3470	25 30	2	M6 x 16mm SHCS & Washer	Hex Nut
75-3475	40	2	M8 x 20mm SHCS & Washer	Hex Nut

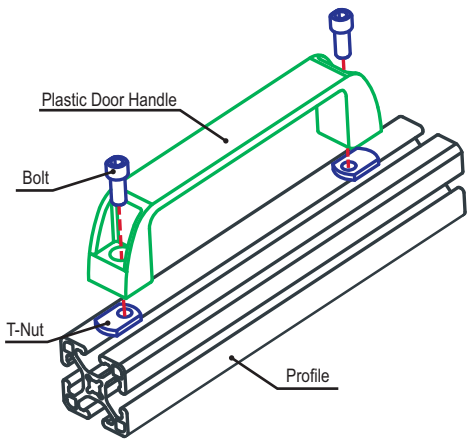

Part Description:

The offset plastic handle is made of fiberglass-reinforced nylon that is corrosion-resistant making it useful for both indoor and outdoor applications. It bolts directly to the T-slot profile and is ideal for bi-fold doors. One side is completely solid to prevent finger pinching and there is an orange snap-on cover included to hide the mounting screws and provide a clean look. All mounting hardware is included.

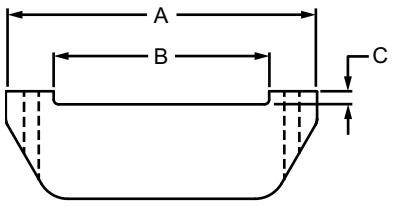

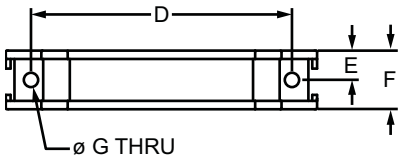

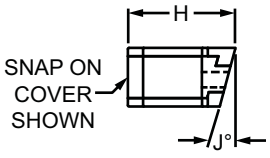

Part No.	Series	Body Color	Cover Color	A	B	C	D	E	F	G	H	J	Weight
2079	10 15	Black	Orange	5.078"	3.543"	.217"	4.291"	.482"	.964"	.236"	1.767"	15°	.196 lb
40-2079	25 30 40			129.00mm	90.00mm	5.50mm	109.00mm	12.25mm	24.50mm	6.00mm	44.90mm	15°	.0826 kg

Material Specifications

Material	Finish	Process
Fiberglass-Reinforced Nylon	Matte	Molded

Included Hardware (Mount to T-Slot)

Part No.	Series	Qty.	Bolt	T-Nut
75-3802	10	2	1/4-20 x 5/8 BHSCS	Economy
75-3804	15	2	1/4-20 x 3/4 BHSCS	Economy
75-3406	25 30	2	M6 x 16mm BHSCS	Economy
75-3407	40	2	M6 x 20mm BHSCS	Economy

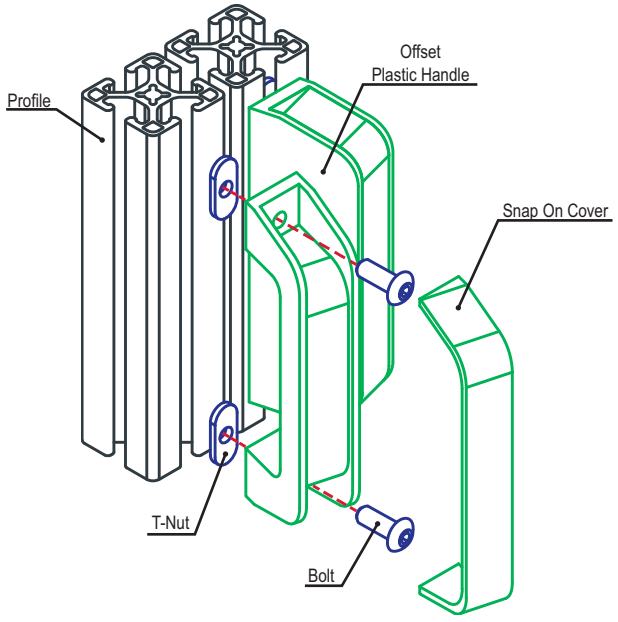

Ergonomic Plastic Handle

Part Description:

The ergonomic plastic handle is made of durable yet lightweight fiberglass-reinforced nylon. It is corrosion-resistant, lending it to both indoor and outdoor applications. The handle has an easy to grip design and an offset, closed side for finger protection. The ergonomic plastic handle mounts directly to a T-slot profile.

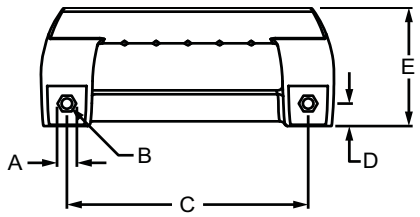

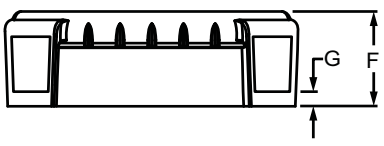

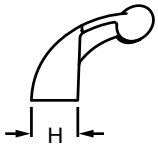

Part No.	Series	Material	Process	Color	A	B	C	D	E	F	G	H	Weight
12000	15 40 45	Nylon PA	Injection Molded	Black	16.00mm	8.70mm	198.00mm	19.00mm	100.00mm	80.00mm	12.50mm	38.00mm	.0762 kg

Suggested Hardware (Mount to T-Slot)

Part No.	Series	Qty.	Bolt	T-Nut
3454	15	2	5/16-18 x 5/8 SHCS	Economy
75-3621	40	2	M8 x 16mm SHCS	Economy
75-3623	45	2	M8 x 16mm SHCS	Drop-In

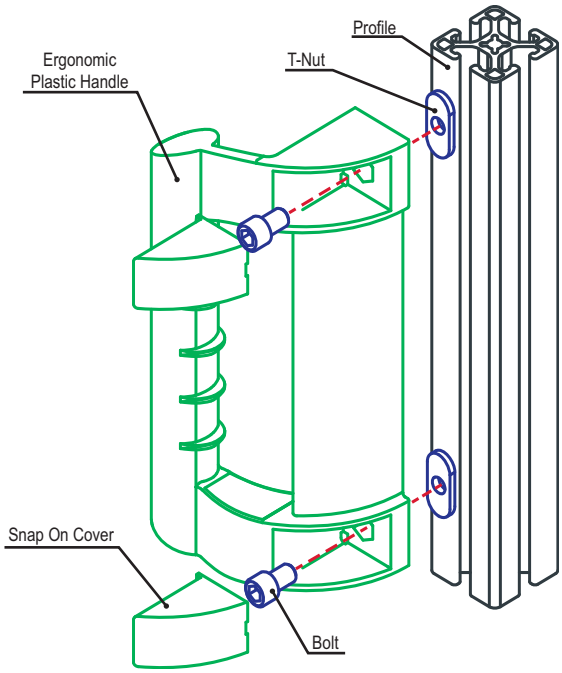

Aluminum Door Handle

Part Description:

The aluminum door handle has a rigid design that creates a smooth shape and durable finish. It is corrosion-resistant, lending itself to both indoor and outdoor applications. It is available in black or natural mill finish and mounts directly to a T-slot profile.

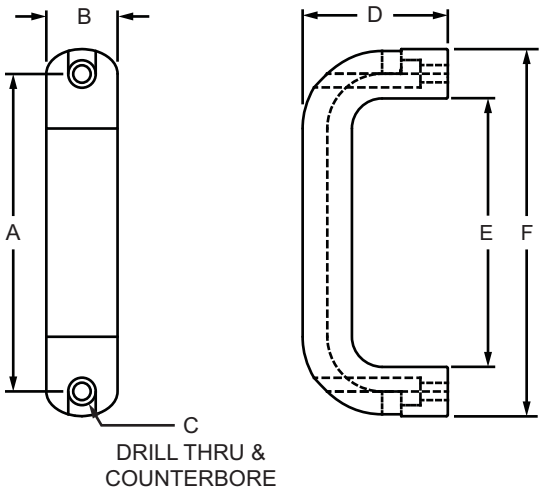

Part No.	Series	Material	Finish	Process	Color	A	B	C	D	E	F	Weight
2884	10 15	Aluminum	Textured Powder Coat	Extruded	Black	4.570"	1.020"	1/4	2.090"	3.858"	5.275"	.354 lb
2885	10 15		Tumbled Mill		Silver	4.570"	1.020"	1/4	2.090"	3.858"	5.275"	.343 lb
2886	10 15		Textured Powder Coat		Black	6.460"	1.020"	1/4	2.240"	5.750"	7.165"	.453 lb
2887	10 15		Tumbled Mill		Silver	6.460"	1.020"	1/4	2.240"	5.750"	7.165"	.459 lb
40-2884	25 30 40 45		Textured Powder Coat		Black	116.00mm	26.00mm	M6	53.00mm	98.00mm	134.00mm	.1589 kg
40-2885	25 30 40 45		Tumbled Mill		Silver	116.00mm	26.00mm	M6	53.00mm	98.00mm	134.00mm	.1533 kg
40-2886	25 30 40 45		Textured Powder Coat		Black	164.00mm	26.00mm	M6	57.00mm	146.00mm	182.00mm	.2118 kg
40-2887	25 30 40 45		Tumbled Mill		Silver	164.00mm	26.00mm	M6	57.00mm	146.00mm	182.00mm	.2095 kg

Suggested Hardware (Mount to T-Slot)

Series	Part No.	Qty.	Bolt	Part No.	Qty.	T-Nut
10	3067	2	1/4-20 x .625" SHCS	3382	2	Economy
15	3064	2	1/4-20 x .750" SHCS	3382	2	Economy
25 30	11-6518	2	M6 x 18mm SHCS	25-1961	2	Economy
40	11-6520	2	M6 x 20mm SHCS	40-1961	2	Economy
45	11-6520	2	M6 x 20mm SHCS	13129	2	Drop-In

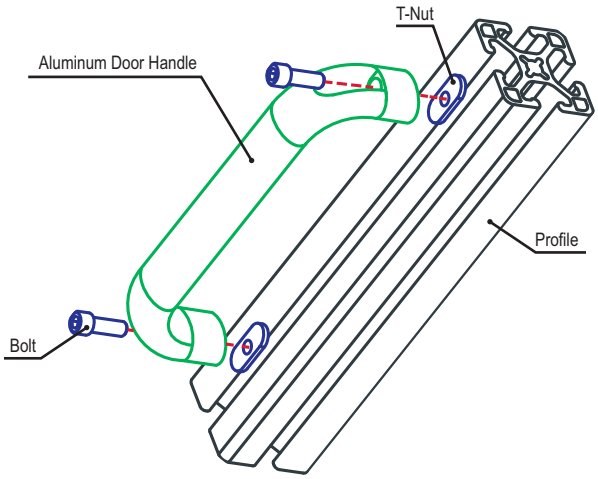

Ready Tube® Aluminum Handle

Part Description:

The Ready Tube aluminum handle has a durable, black finish and rigid design that creates a smooth shape. It is corrosion-resistant, lending itself to both indoor and outdoor applications. See below for suggested mounting hardware.

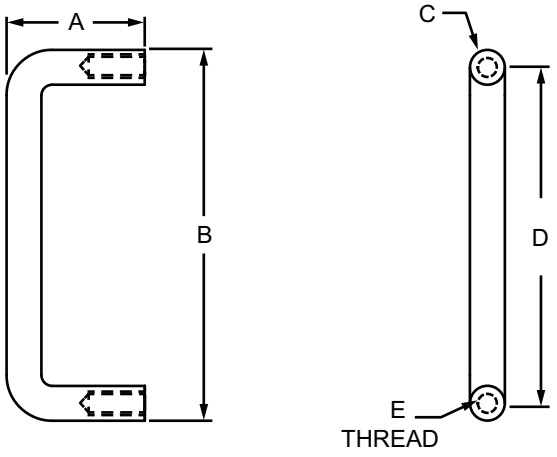

Part No.	Series	Material	Alloy	Finish	A	B	C	D	E	Weight
2888	RT	Aluminum	6061-T6	Black Anodize	1.500"	5.000"	.500"	4.500"	5/16-18	.110 lb
2889	RT				1.500"	6.500"	.500"	6.000"	5/16-18	.137 lb

Suggested Hardware (Mount to Ready Tube Profile)

Part No.	Series	Qty.	Bolt
3753	RT	2	5/16-18 x 2.00" Flanged Hex Head Bolt

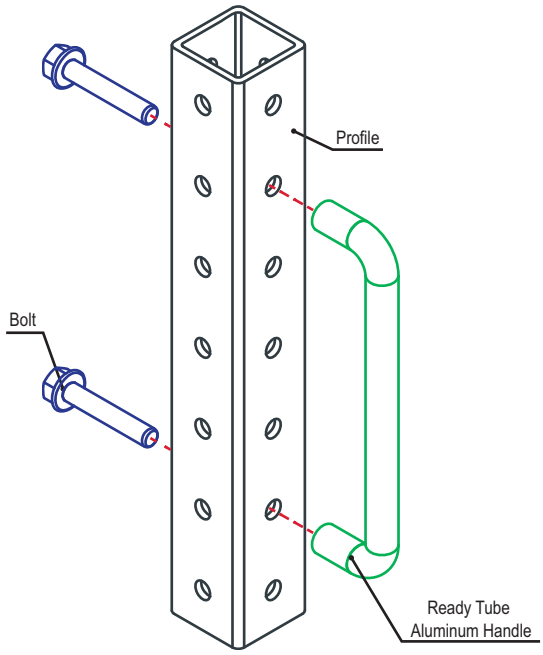

Part Description:

The steel door handle is compact and ideal for smaller areas. It is designed to bolt directly to plastic panels. This handle requires a drill-through service for mounting to plastic panels which can be found on page 905. All of the required mounting hardware is included.

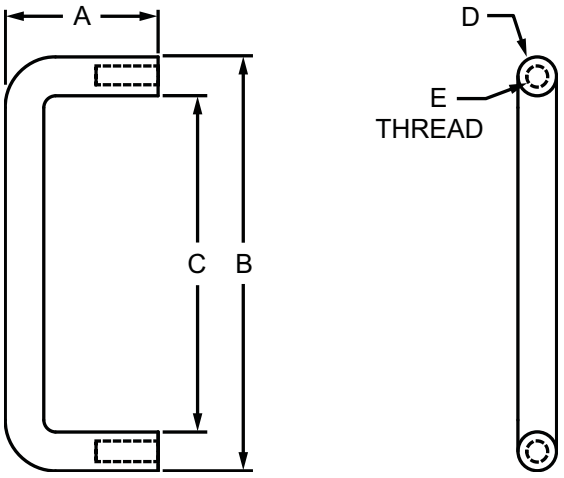

Part No.	Series	Material	Grade	Finish	Process	Color	A	B	C	D	E	Weight
2070	F M	Steel	Carbon	26D Brushed	Formed	Chrome	1.230"	3.300"	2.680"	.310"	8-32 x .500	.104 lb
65-2070	F M						31.20mm	84.00mm	68.30mm	8.00mm	8-32 x .500	.0470 kg

Required Machining Services

Machining Type	Part Machined	Reference Page
Steel Door Handle Plastic Panel Milling	Panel	905

Included Hardware (Mount to 1/4" Panel)

Part No.	Series	Qty.	Bolt
3024	F M	2	8-32 x 1/2" BHSCS

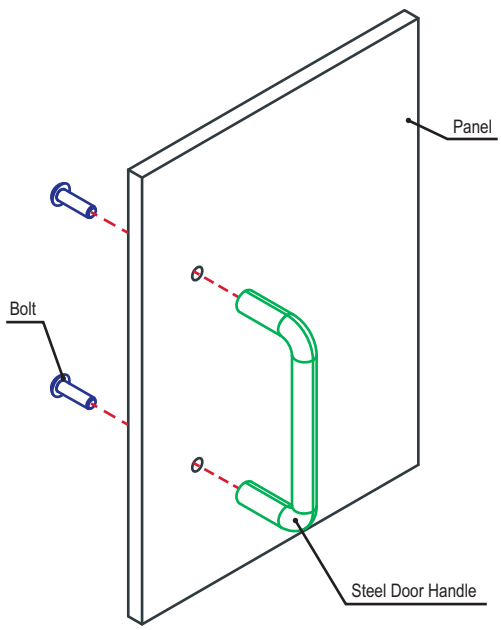

Flush Plastic Panel Handle

Part Description:

The flush plastic panel handle consists of a housing unit and a pull that together create a flush handle that doesn't protrude, convenient for high-traffic areas. It provides an aesthetic appearance and mounts in panels .375" (10mm) or thinner and the mounting hardware is included. A flush handle panel milling service is required which can be found on page 898.

2056, 65-2056

2058, 65-2058

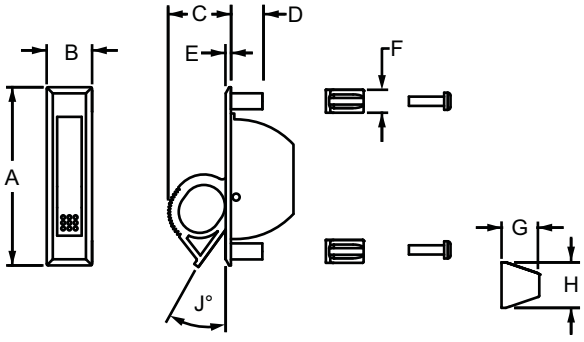

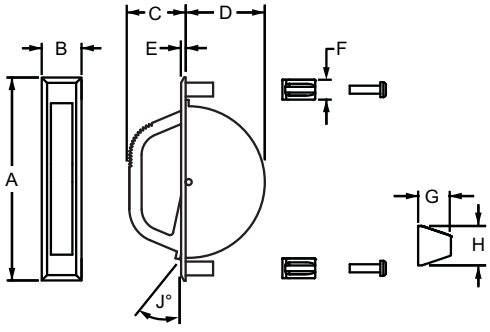

Part No.	Series	Material	Grade	Finish	A	B	C	D	E	F	G	H	J	Weight
2056	F M	Plastic	LNP™ Stat-Kon™	Matte	3.180"	.750"	1.094"	.560"	.094"	.409"	.673"	.811"	30°	.057 lb
2058	F M	Aluminum	—	Black Powder Coat	4.190"	.825"	1.152"	1.625"	.098"	.409"	.673"	.811"	12°	.122 lb
65-2056	F M	Plastic	LNP™ Stat-Kon™	Matte	80.77mm	19.05mm	27.79mm	14.22mm	2.38mm	10.40mm	17.10mm	20.60mm	30°	.0247 kg
65-2058	F M	Aluminum	—	Black Powder Coat	106.40mm	20.95mm	29.26mm	41.27mm	2.49mm	10.40mm	17.10mm	20.60mm	12°	.0562 kg

Required Machining Services

Machining Type	Part Machined	Reference Page
Flush Handle Plastic Panel Milling	Panel	898

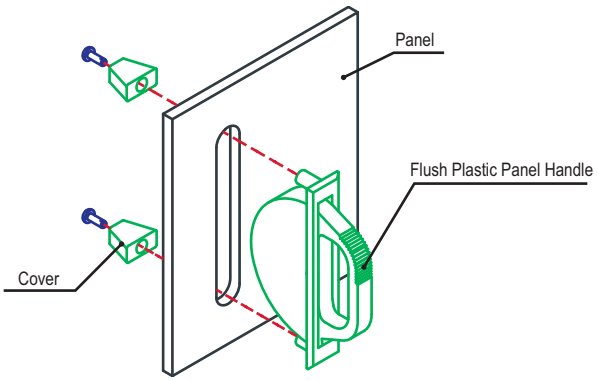

Part Description:

The aluminum handle is made of clear anodized aluminum, making it a strong, lightweight option that is corrosion-resistant, lending itself to both indoor and outdoor applications. It easily mounts to the edge of a .250" (6.35mm) plastic panel and helps add rigidity. The handle is commonly used for sliding doors. It comes in three stock lengths but is available in custom lengths on page 855.

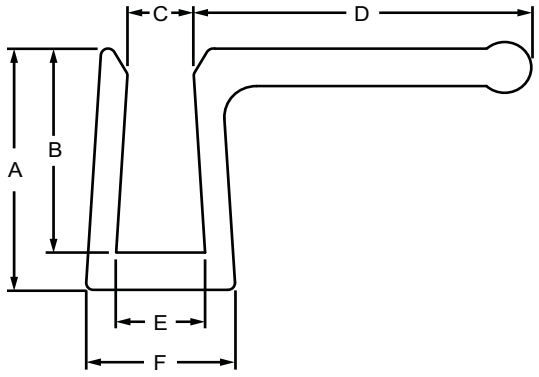

Part No.	Series	A	B	C	D	E	F	Stock Length	Weight
2780	F M	.710"	.600"	.182"	.953"	.245"	.420"	3.000"	.075 lb
2781	F M	.710"	.600"	.182"	.953"	.245"	.420"	6.000"	.150 lb
2782	F M	.710"	.600"	.182"	.953"	.245"	.420"	9.000"	.225 lb
65-2780	F M	18.03mm	15.24mm	4.62mm	24.21mm	6.22mm	10.67mm	76.20mm	.0340 kg
65-2781	F M	18.03mm	15.24mm	4.62mm	24.21mm	6.22mm	10.67mm	152.40mm	.0680 kg
65-2782	F M	18.03mm	15.24mm	4.62mm	24.21mm	6.22mm	10.67mm	228.60mm	.1021 kg

Material Specifications

Material	Alloy*	Finish	Process
Aluminum	6105-T5	Clear Anodize	Extruded

* Or comparable

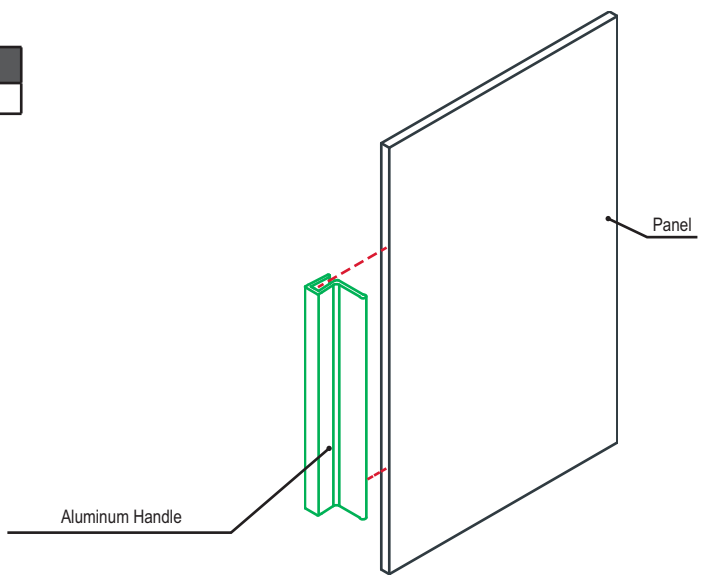

Locking Plastic Panel Grabber™ Handle

Part Description:

The locking plastic panel Grabber™ handle is comprised of a black polycarbonate slam action latch, handle, and lock, making it a high-strength option. A striker plate is also included. The slam latch engages the striker plate to help create the closing connection. The locking plastic panel Grabber handle can be opened from either side of the door and mounts to panels between .075" and .275" (2mm-7mm). The mounting hardware is included.

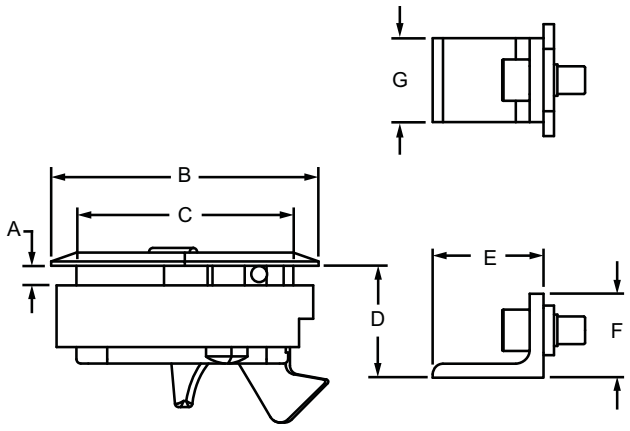

Part No.	Series	Material	Process	Color	A	B	C	D	E	F	G	Weight
2730	10 15 25 30 40 45	PC/PBT Blend	Injection Molded	Black	.075" to .275"	2.413"	1.957"	1.000"	1.000"	.750"	.750"	.180 lb
65-2730	10 15 25 30 40 45				2mm to 7mm	61.30mm	49.70mm	25.40mm	25.40mm	19.05mm	19.05mm	.0806 kg

Required Machining Services

Machining Type	Part Machined	Reference Page
Locking Grabber Handle Panel Milling	Panel	897

Included Hardware (Mount Striker Plate to T-Slot)

Part No.	Series	Qty.	Description
3058	10 25 30	1	1/4-20 x 3/8" SHCS
3062	15 40	1	1/4-20 x 1/2" SHCS
3382	10 15 25 30 40	1	Slide-In Economy T-Nut

Suggested Hardware (Mount Striker Plate to T-Slot)

Part No.	Series	Qty.	Description
11-6514	45	1	M6 x 14mm SHCS
14126	45	1	Slide-In Economy T-Nut Block

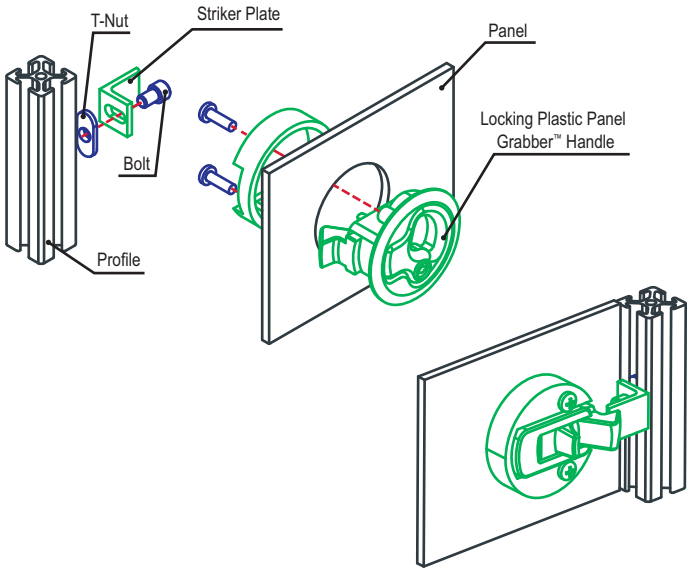

Part Description:

The deluxe door handle with pawl kit has a chrome finish which provides corrosion resistance and an aesthetic appearance. Easily add a deluxe door mating handle to provide handles on both sides of a door. The pawl kit and mounting hardware are included. The deluxe door handle with pawl kit requires a deluxe door handle profile milling service. **Additional Information:** This handle is compatible with the deluxe door mating handle (page 568) as well as other pawl kits which can be found on page 571.

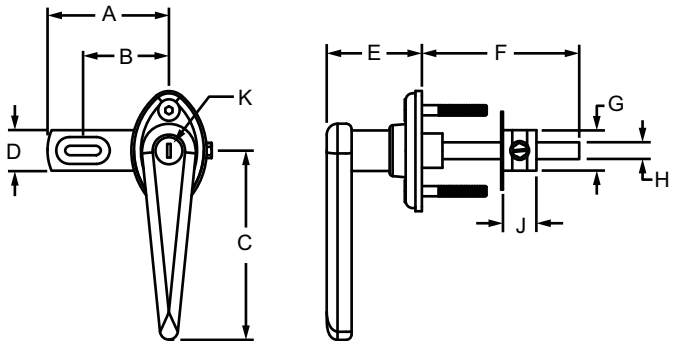

Part No.	Series	A	B	C	D	E	F	G	H	J	K	Weight
2055	15	2.250"	1.590"	3.313"	.750"	1.969"	3.000"	.750"	.313"	.620"	Non-Locking	.301 lb
2063	15	2.250"	1.590"	3.313"	.750"	1.969"	3.000"	.750"	.313"	.620"	Locking	.695 lb
40-2055	40	57.15mm	40.38mm	84.15mm	19.05mm	50.00mm	76.20mm	19.05mm	7.95mm	15.75mm	Non-Locking	.3012 kg
40-2063	40	57.15mm	40.38mm	84.15mm	19.05mm	50.00mm	76.20mm	19.05mm	7.95mm	15.75mm	Locking	.3065 kg

Material Specifications

Material	Finish
Steel	Chrome

Required Machining Services

Machining Type	Part Machined	Reference Page
Deluxe Door Handle Profile Milling	Profile	874

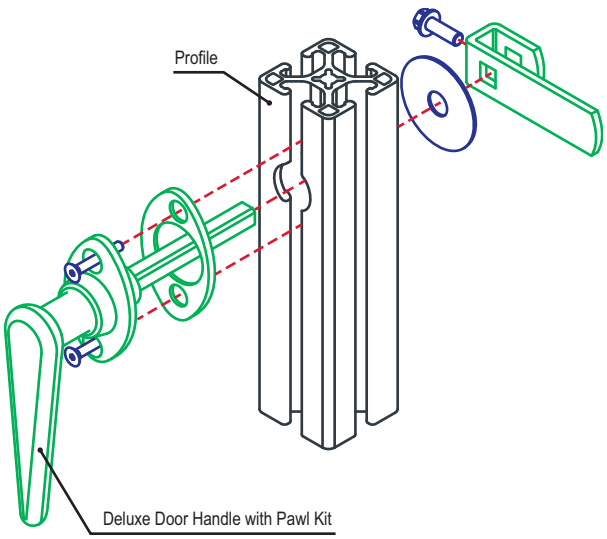

Deluxe Door Mating Handle

Part Description:

The deluxe door mating handle has a chrome finish which provides corrosion resistance and an aesthetic appearance. It easily attaches with a simple set screw to the stem of the deluxe door handle with pawl kit (page 567) to provide handles on both sides of a door. The deluxe door mating handle requires no machining services.

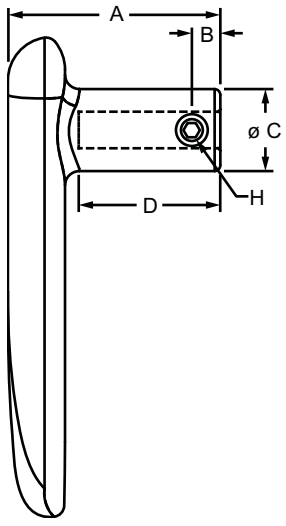

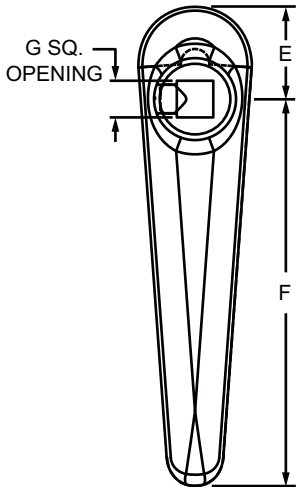

Part No.	Series	Material	Finish	A	B	C	D	E	F	G	H	Weight
2052	15	Steel	Chrome	1.875"	.250"	.719"	1.250"	.813"	3.313"	.320"	1/4-20 x .250	.362 lb
40-2052	40			47.63mm	6.35mm	18.26mm	3.18mm	2.07mm	84.15mm	8.13mm	1/4-20 x .250	.1570 kg

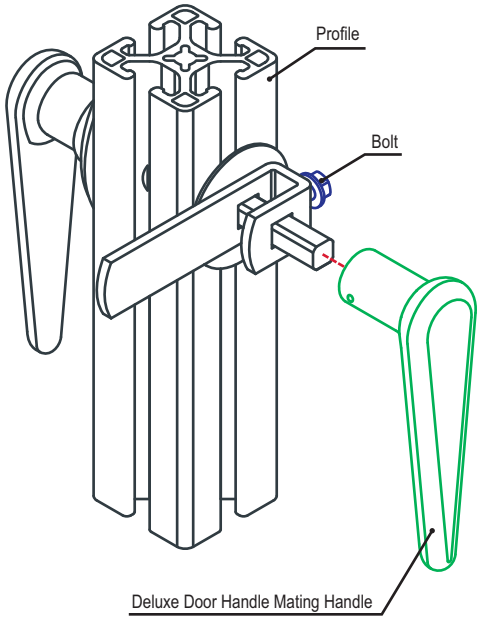

Part Description:

The furniture style handle is available in either chrome-plated or matte black options as well as a “T” or “L” shape. Choices range from locking to unlocking as well as a 90 degree counter-clockwise or clockwise rotation. It requires a furniture style handle profile milling service found on page 875. Use a pawl kit (page 571) with the furniture style handle to create a latching connection. All mounting hardware is included.

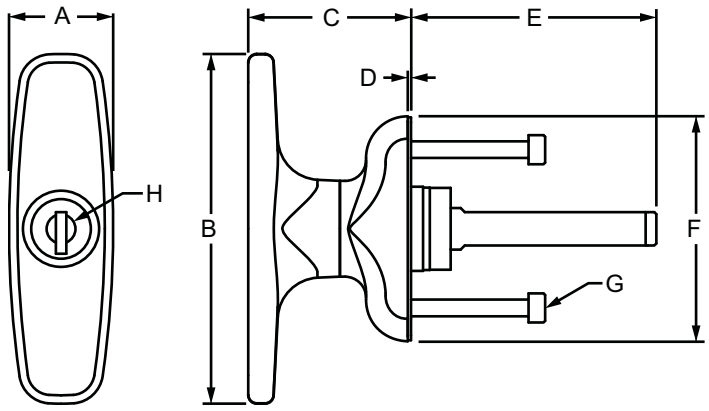

Part No.	Series	Material	Finish	Color	Rotation to Close	A	B	C	D	E	F	G	H	Weight
2082	10 15	Die Cast Zinc	Chrome	Bright	Counter Clockwise	.984”	3.307”	1.535”	.031”	2.319”	2.126”	M4-0.7	Locking	.552 lb
2083	10 15					.984”	3.307”	1.535”	.031”	2.319”	2.126”	M4-0.7	Non-Locking	.532 lb
2952	10 15		Powder Coat	Black		.984”	3.307”	1.535”	.031”	2.319”	2.126”	M4-0.7	Locking	.568 lb
2953	10 15					.984”	3.307”	1.535”	.031”	2.319”	2.126”	M4-0.7	Non-Locking	.523 lb
2932	10 15		Chrome	Bright	Clockwise	.984”	3.307”	1.535”	.031”	2.319”	2.126”	M4-0.7	Locking	.686 lb
2933	10 15					.984”	3.307”	1.535”	.031”	2.319”	2.126”	M4-0.7	Non-Locking	.649 lb
2922	10 15		Powder Coat	Black		.984”	3.307”	1.535”	.031”	2.319”	2.126”	M4-0.7	Locking	.646 lb
2923	10 15					.984”	3.307”	1.535”	.031”	2.319”	2.126”	M4-0.7	Non-Locking	.647 lb
65-2082	25 40		Chrome	Bright	Counter Clockwise	25.00mm	84.00mm	39.00mm	.80mm	57.50mm	54.00mm	M4-0.7	Locking	.2545 kg
65-2083	25 40					25.00mm	84.00mm	39.00mm	.80mm	57.50mm	54.00mm	M4-0.7	Non-Locking	.2371 kg
65-2952	25 40		Powder Coat	Black		25.00mm	84.00mm	39.00mm	.80mm	57.50mm	54.00mm	M4-0.7	Locking	.3356 kg
65-2953	25 40					25.00mm	84.00mm	39.00mm	.80mm	57.50mm	54.00mm	M4-0.7	Non-Locking	.2387 kg
65-2932	25 40		Chrome	Bright	Clockwise	25.00mm	84.00mm	39.00mm	.80mm	59.00mm	54.00mm	M4-0.7	Locking	.3113 kg
65-2933	25 40					25.00mm	84.00mm	39.00mm	.80mm	59.00mm	54.00mm	M4-0.7	Non-Locking	.2947 kg
65-2922	25 40		Powder Coat	Black		25.00mm	84.00mm	39.00mm	.80mm	59.00mm	54.00mm	M4-0.7	Locking	.2934 kg
65-2923	25 40					25.00mm	84.00mm	39.00mm	.80mm	59.00mm	54.00mm	M4-0.7	Non-Locking	.2937 kg

Required Machining Services

Machining Type	Part Machined	Reference Page
Furniture Style Handle Profile Milling	Profile	875

CONTINUE

Furniture Style Handle (Continued)

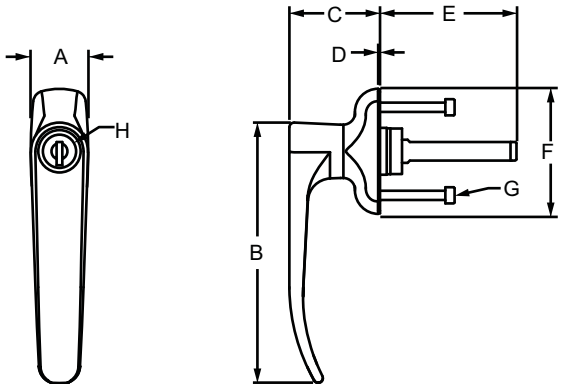

Part No.	Series	Material	Finish	Color	Rotation to Close	A	B	C	D	E	F	G	H	Weight
2087	10 15	Die Cast Zinc	Chrome	Bright	Counter Clockwise	.984"	4.423"	1.535"	.031"	2.319"	2.126"	M4-0.7	Locking	.580 lb
2089	10 15					.984"	4.423"	1.535"	.031"	2.319"	2.126"	M4-0.7	Non-Locking	.553 lb
2957	10 15		Powder Coat	Black		.984"	4.423"	1.535"	.031"	2.319"	2.126"	M4-0.7	Locking	.579 lb
2959	10 15					.984"	4.423"	1.535"	.031"	2.319"	2.126"	M4-0.7	Non-Locking	.549 lb
2937	10 15		Chrome	Bright	Clockwise	.984"	4.423"	1.535"	.031"	2.319"	2.126"	M4-0.7	Locking	.701 lb
2939	10 15					.984"	4.423"	1.535"	.031"	2.319"	2.126"	M4-0.7	Non-Locking	.670 lb
2927	10 15		Powder Coat	Black		.984"	4.423"	1.535"	.031"	2.319"	2.126"	M4-0.7	Locking	.700 lb
2929	10 15					.984"	4.423"	1.535"	.031"	2.319"	2.126"	M4-0.7	Non-Locking	.546 lb
65-2087	25 40		Chrome	Bright	Counter Clockwise	25.00mm	112.34mm	39.00mm	.80mm	59.00mm	54.00mm	M4-0.7	Locking	.2499 kg
65-2089	25 40					25.00mm	112.34mm	39.00mm	.80mm	59.00mm	54.00mm	M4-0.7	Non-Locking	.2475 kg
65-2957	25 40		Powder Coat	Black		25.00mm	112.34mm	39.00mm	.80mm	59.00mm	54.00mm	M4-0.7	Locking	.2615 kg
65-2959	25 40					25.00mm	112.34mm	39.00mm	.80mm	59.00mm	54.00mm	M4-0.7	Non-Locking	.2482 kg
65-2937	25 40		Chrome	Bright	Clockwise	25.00mm	112.34mm	39.00mm	.80mm	59.00mm	54.00mm	M4-0.7	Locking	.3180 kg
65-2939	25 40					25.00mm	112.34mm	39.00mm	.80mm	59.00mm	54.00mm	M4-0.7	Non-Locking	.3043 kg
65-2927	25 40		Powder Coat	Black		25.00mm	112.34mm	39.00mm	.80mm	59.00mm	54.00mm	M4-0.7	Locking	.3177 kg
65-2929	25 40					25.00mm	112.34mm	39.00mm	.80mm	59.00mm	54.00mm	M4-0.7	Non-Locking	.3044 kg

Required Machining Services

Machining Type	Part Machined	Reference Page
Furniture Style Handle Profile Milling	Profile	875

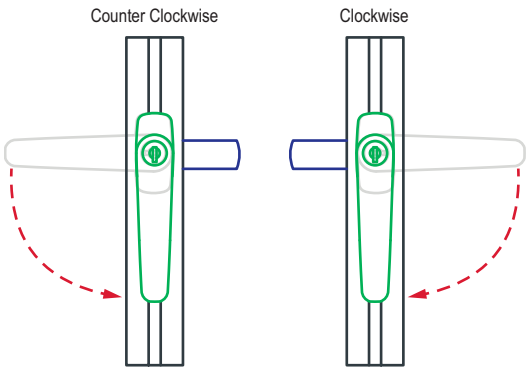

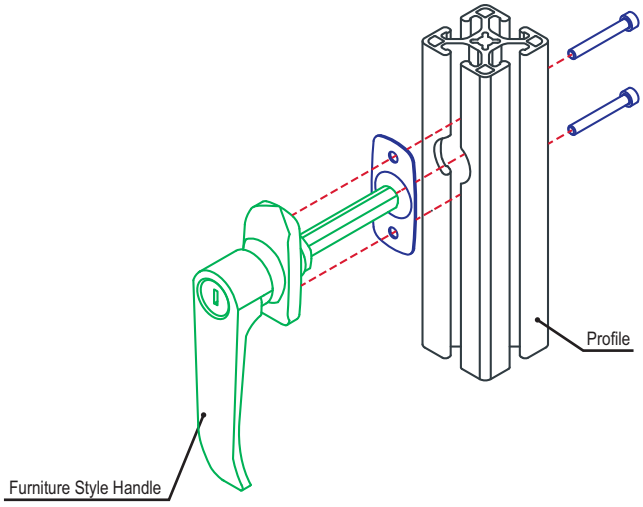

Part Description:

The furniture style handle pawl kit is used to assist in latching a door utilizing a deluxe or furniture style handle which can be found on pages 567-570. There are options available as a transition between the 10 and 15 series or between the 25 and 40 series. All mounting hardware is included.

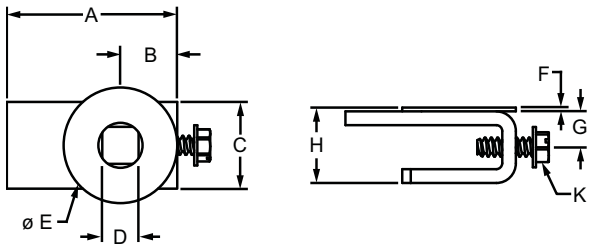

10, 25, 30 Series

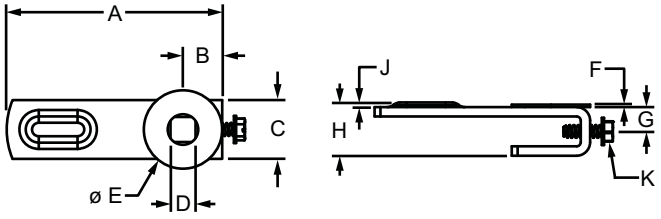

15, 30, 40 Series

Part No.	Series	A	B	C	D	E	F	G	H	J	K	Weight
2761	10	1.250"	.500"	.750"	.320"	1.000"	.032"	.310"	.652"	—	SDS #10 x .500"	.072 lb
2763	10 to 15	1.500"	.500"	.750"	.320"	1.000"	.032"	.310"	.652"	—	SDS #10 x .500"	.088 lb
2765	15	1.750"	.500"	.750"	.320"	1.000"	.032"	.310"	.680"	.060"	SDS #10 x .500"	.086 lb
2760	15	2.750"	.500"	.750"	.320"	1.000"	.032"	.310"	.680"	.060"	SDS #10 x .500"	.118 lb
25-2761	25	31.75mm	12.70mm	19.05mm	8.13mm	25.40mm	.81mm	7.87mm	16.56mm	—	SDS #10 x .500"	.0272 kg
65-2763	25 to 40	38.10mm	12.70mm	19.05mm	8.13mm	25.40mm	.81mm	7.87mm	16.56mm	—	SDS #10 x .500"	.0320 kg
40-2765	40	44.45mm	12.70mm	19.05mm	8.13mm	25.40mm	.81mm	7.87mm	16.56mm	1.52mm	SDS #10 x .500"	.0327 kg
40-2760	40	69.90mm	12.70mm	19.05mm	8.13mm	25.40mm	.81mm	7.87mm	17.27mm	1.52mm	SDS #10 x .500"	.0426 kg

Material Specifications

Material	Grade	Finish	Process
Steel	Low Carbon	Bright Zinc	Stamping / Blending

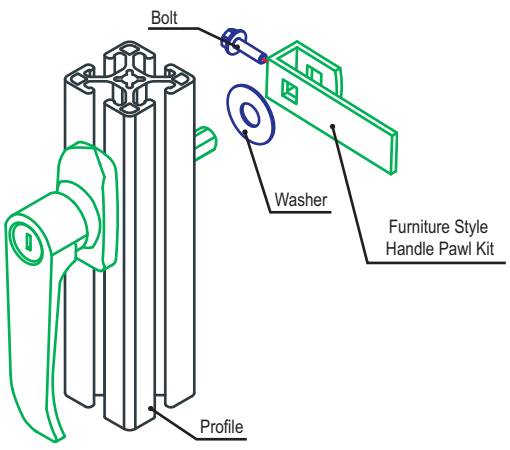

Slam Latch

Part Description:

The slam latch is a die cast aluminum handle that mounts to a T-slot door or frame from the front. It provides a compact handle that takes up only a small amount of space from the surface of the latch to the profile. The slam latch is safe against disassembly in the locked position. There are options available with both locking mechanisms keyed alike, keyed different or without a lock. No machining is required.

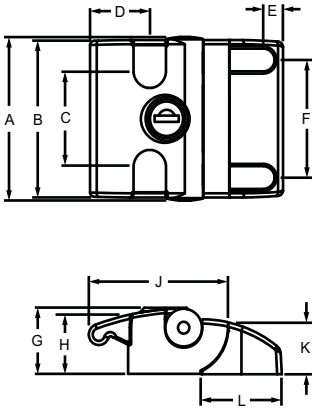

Front View

Back View

Part No.	Series	Lock	A	B	C	D	E	F	G	H	J	K	L	Weight
12145	15 30 40 45	keyed alike	77.80mm	75.00mm	44.40mm	30.00mm	9.90mm	56.00mm	31.60mm	28.30mm	69.00mm	24.50mm	40.20mm	.2404 kg
12146	15 30 40 45	different key	77.80mm	75.00mm	44.40mm	30.00mm	9.90mm	56.00mm	31.60mm	28.30mm	69.00mm	24.50mm	40.20mm	.2418 kg
12147	15 30 40 45	without key	77.80mm	75.00mm	44.40mm	30.00mm	9.90mm	56.00mm	31.60mm	28.30mm	69.00mm	24.50mm	40.20mm	.2002 kg

Material Specifications

Material	Finish	Process	Color
Aluminum	Powder Coat	Die Cast	Black

Suggested Hardware (Mount to T-Slot)

Part No.	Series	Qty.	Description
13-6516	15 30 40 45	4	M6 x 16mm SHCS
13117	30	4	Standard Drop-In T-Nut
13119	15 40	4	Standard Drop-In T-Nut
13129	45	4	Standard Drop-In T-Nut

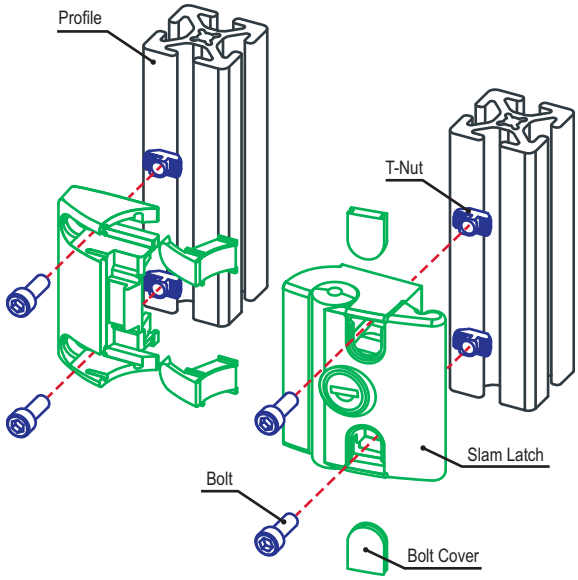

Part Description:

The Velcro® latch consists of Velcro® material bonded to a clear anodized aluminum body. It includes a fastener hook pad key that twists into a T-slot profile, perfect for instances where profiles are captivated. It is recommended for displays, enclosures, and light-duty doors where easy access is required. All of the mounting hardware is included.

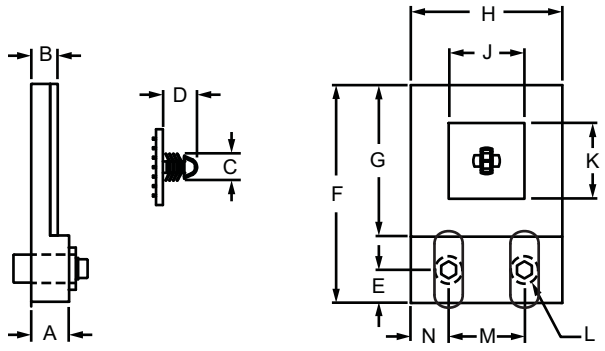

Part No.	Series	A	B	C	D	E	F	G	H	J	K	L	M	N	Weight
2126	15	.500"	.335"	.350"	.448"	.437"	2.875"	2.000"	2.000"	1.000"	1.000"	1/4-20	1.000"	.500"	.243 lb
65-2126	40	12.70mm	8.50mm	8.90mm	11.40mm	11.10mm	73.03mm	50.80mm	50.80mm	25.40mm	25.40mm	M6 x 1.0	25.40mm	12.70mm	.1048 kg

Material Specifications

Housing Material	Alloy*	Pad Material
Aluminum	6105-T5	Velcro®

* Or comparable

Included Hardware (Mount Velcro Latch to T-Slot)

Series	Part No.	Qty.	Bolt	Part No.	Qty.	T-Nut
15	3068	2	1/4-20 x 7/8" SHCS	3382	2	Slide-In Economy T-Nut
40	13-6520	2	M6 x 20mm SHCS	3859	2	Slide-In Economy T-Nut

Velcro® Fastener

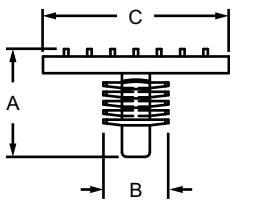

Part No.	Series	A	B	C	Weight
3273	15	.580"	.350"	1.000"	.007 lb
40-3273	40	14.74mm	8.89mm	25.40mm	.0023 kg

Material Specifications

Material	Grade	Process	Color
Plastic	PVC	Injection Mold	Black

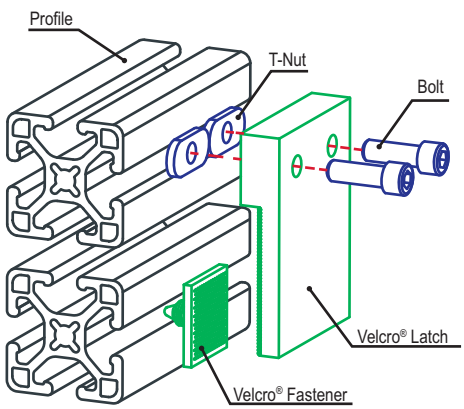

0 Degree Deadbolt Latch

Part Description:

The 0 degree deadbolt latch is made of aluminum, making it strong and corrosion-resistant. The body supports a stainless steel bolt, spring and pin. It has a positive spring-loaded deadbolt which makes it ideal for guarding and enclosure applications. The hardware to mount the latch to a T-slot is included.

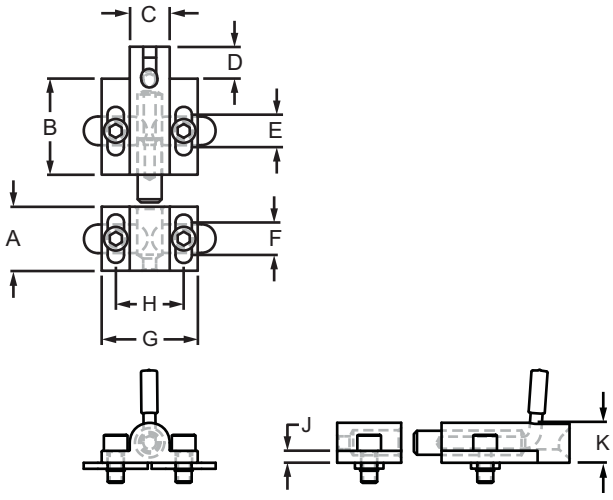

Part No.	Series	Color	A	B	C	D	E	F	G	H	J	K	Weight
2053	10 15	Clear	1.000"	1.500"	.625"	.500"	.507"	.500"	1.500"	1.062"	.187"	.625"	.226 lb
2053-Black	10 15	Black	1.000"	1.500"	.625"	.500"	.507"	.500"	1.500"	1.062"	.187"	.625"	.226 lb
65-2053	25 30 40	Clear	25.40mm	38.10mm	15.88mm	12.70mm	12.88mm	12.70mm	38.10mm	26.97mm	4.75mm	15.88mm	.1007 kg
65-2053-Black	25 30 40	Black	25.40mm	38.10mm	15.88mm	12.70mm	12.88mm	12.70mm	38.10mm	26.97mm	4.75mm	15.88mm	.1007 kg
45-2053	45	Clear	38.00mm	38.10mm	15.88mm	12.70mm	12.88mm	25.40mm	38.10mm	26.97mm	4.75mm	15.88mm	.1212 kg
45-2053-Black	45	Black	38.00mm	38.10mm	15.88mm	12.70mm	12.88mm	25.40mm	38.10mm	26.97mm	4.75mm	15.88mm	.1212 kg

Material Specifications

Material	Alloy*	Finish	Process
Aluminum	6105-T5	Anodize	Milled

* Or comparable

Included Hardware (Mount to T-Slot)

Part No.	Series	Qty.	Description
3062	10 15 25 30 40	4	1/4-20 x 1/2" SHCS
3382		4	1/4-20 Slide-In Economy T-Nut
11-6514	45	4	M6 x 14mm SHCS
13129		4	M6 x 1.0 Drop-in T-Nut

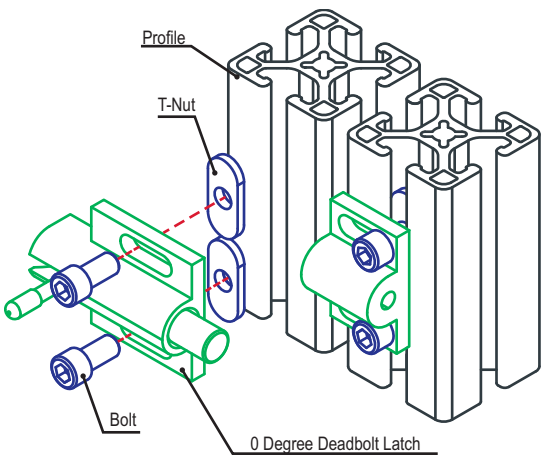

90 Degree Deadbolt Latch

Part Description:

The 90 degree deadbolt latch is made of aluminum, making it strong and corrosion-resistant. The body supports a stainless steel bolt, spring and pin. The pin handle is positioned at a 90 degree angle to prevent snagging. It has a positive spring-loaded deadbolt which makes it ideal for guarding and enclosure applications. The hardware to mount the latch to a T-slot is included.

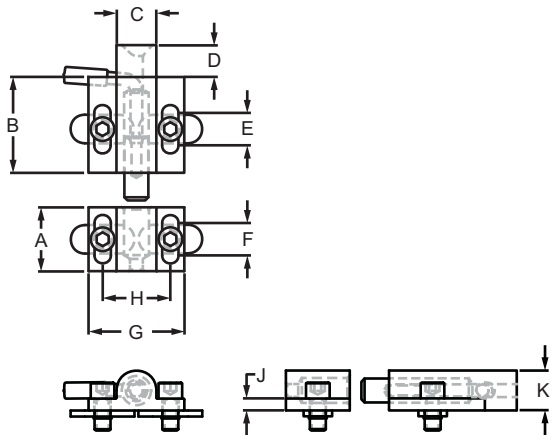

Part No.	Series	Color	A	B	C	D	E	F	G	H	J	K	Weight
2107	10 15	Clear	1.000"	1.500"	.625"	.500"	.507"	.500"	1.500"	1.062"	.187"	.625"	.223 lb
2107-Black	10 15	Black	1.000"	1.500"	.625"	.500"	.507"	.500"	1.500"	1.062"	.187"	.625"	.223 lb
65-2107	25 30 40	Clear	25.40mm	38.10mm	15.88mm	12.70mm	12.88mm	12.70mm	38.10mm	26.97mm	4.75mm	15.88mm	.1004 kg
65-2107-Black	25 30 40	Black	25.40mm	38.10mm	15.88mm	12.70mm	12.88mm	12.70mm	38.10mm	26.97mm	4.75mm	15.88mm	.1004 kg
45-2107	45	Clear	38.00mm	38.10mm	15.88mm	12.70mm	12.88mm	25.40mm	38.10mm	26.97mm	4.75mm	15.88mm	.1209 kg
45-2107-Black	45	Black	38.00mm	38.10mm	15.88mm	12.70mm	12.88mm	25.40mm	38.10mm	26.97mm	4.75mm	15.88mm	.1209 kg

Material Specifications

Material	Alloy*	Finish	Process
Aluminum	6105-T5	Anodize	Milled

* Or comparable

Included Hardware (Mount to T-Slot)

Part No.	Series	Qty.	Description
3062	10 15 25 30 40	4	1/4-20 x 1/2" SHCS
3382		4	1/4-20 Slide-In Economy T-Nut
11-6514	45	4	M6 x 14mm SHCS
13129		4	M6 x 1.0 Drop-in T-Nut

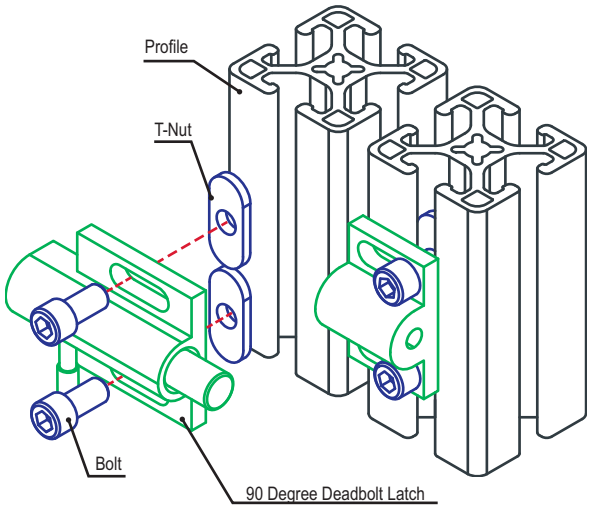

Grabber™ Door Catch

Part Description:

The Grabber™ door catch is made of corrosion-resistant black ABS with three different pull forces available. It is spring-loaded and mounts to a T-slot with a Grabber door catch mounting plate (page 577-578) on the inside of an enclosure to create a push to close/pull to open latch. The required hardware to mount the Grabber door catch to the plate is included. It requires a Grabber door catch clearance machining service which includes the tap.

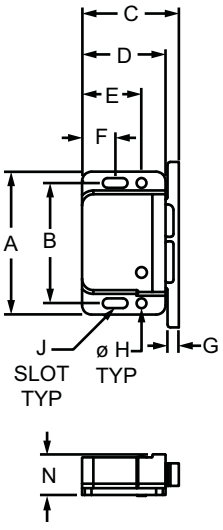

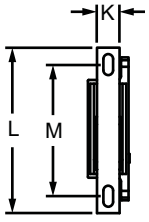

Part No.	Series	A	B	C	D	E	F	G	H	J	K	L	M	N	Pull Force	Weight
2069	10 15	1.900"	1.600"	1.285"	1.110"	.790"	.440"	.150"	.130"	.130 x .330	.300"	2.200"	1.750"	.530"	3.00 lb	.033 lb
2088	10 15	1.900"	1.600"	1.285"	1.110"	.790"	.440"	.150"	.130"	.130 x .330	.300"	2.200"	1.750"	.530"	5.00 lb	.035 lb
2125	10 15	1.900"	1.600"	1.285"	1.110"	.790"	.440"	.150"	.130"	.130 x .330	.300"	2.200"	1.750"	.530"	10.00 lb	.034 lb
65-2069	25 40	48.26mm	40.60mm	32.65mm	28.20mm	20.07mm	11.20mm	3.81mm	3.30mm	3.30mm x 8.40mm	7.62mm	55.88mm	44.45mm	13.70mm	1.40 kg	.0162 kg
65-2088	25 40	48.26mm	40.60mm	32.65mm	28.20mm	20.07mm	11.20mm	3.81mm	3.30mm	3.30mm x 8.40mm	7.62mm	55.88mm	44.45mm	13.70mm	2.30 kg	.0161 kg
65-2125	25 40	48.26mm	40.60mm	32.65mm	28.20mm	20.07mm	11.20mm	3.81mm	3.30mm	3.30mm x 8.40mm	7.62mm	55.88mm	44.45mm	13.70mm	4.60 kg	.0152 kg

Material Specifications

Material	Process	Color
PC / ABS	Injection Molded	Black

Required Machining Services

Machining Type	Part Machined	Reference Page
Grabber Door Catch Panel Milling	Panel	889

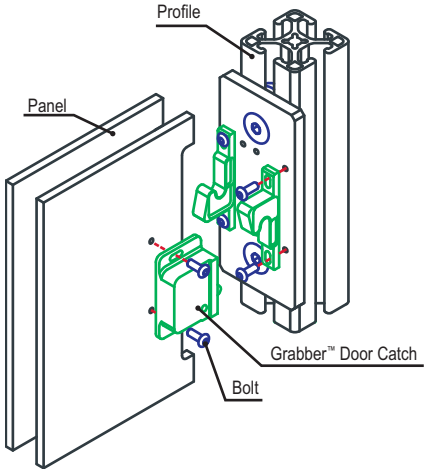

Grabber™ Door Catch Mounting Plate

Part Description:

The Grabber™ door catch mounting plate is made of .250" anodized aluminum and is used to mount the Grabber door catch (page 576) to a T-slot or plastic panel.

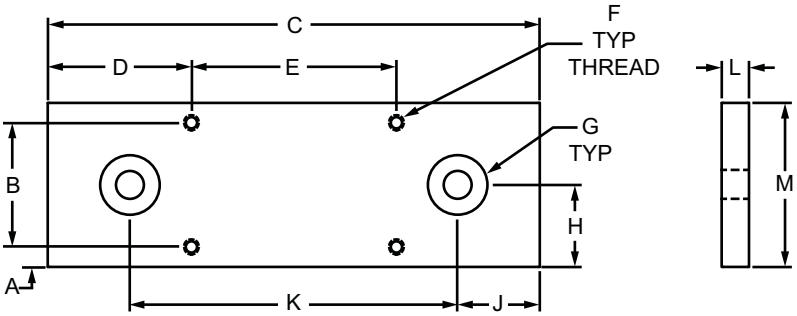

Part No.	Series	Color	A	B	C	D	E	F	G	H	J	K	L	M	Weight
2122	10	Clear	.182"	1.136"	4.500"	1.313"	1.875"	#6-32	5/16-18	.750"	.750"	3.000"	.250"	1.500"	.155 lb
2122-Black	10	Black	.182"	1.136"	4.500"	1.313"	1.875"	#6-32	5/16-18	.750"	.750"	3.000"	.250"	1.500"	.155 lb
25-2122	25	Clear	4.62mm	28.85mm	114.30mm	33.35mm	47.63mm	#6-32	M8 x 1.25	19.05mm	18.67mm	76.20mm	6.35mm	38.10mm	.0706 kg
25-2122-Black	25	Black	4.62mm	28.85mm	114.30mm	33.35mm	47.63mm	#6-32	M8 x 1.25	19.05mm	18.67mm	76.20mm	6.35mm	38.10mm	.0706 kg

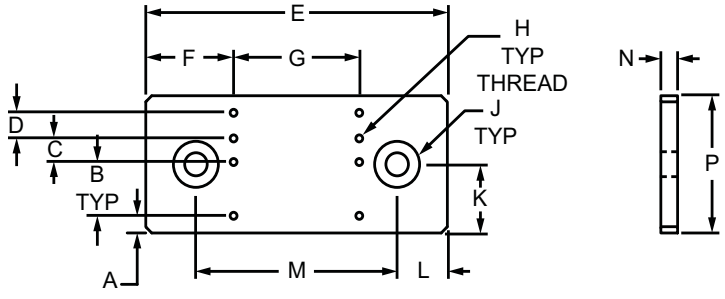

Part No.	Series	Color	A	B	C	D	E	F	G	H	J	K	L	M	N	P	Weight
2121	15	Clear	.250"	.780"	.345"	.375"	4.500"	1.312"	1.875"	#6-32	5/16-18	1.000"	.750"	3.000"	.250"	2.000"	.202 lb
2121-Black	15	Black	.250"	.780"	.345"	.375"	4.500"	1.312"	1.875"	#6-32	5/16-18	1.000"	.750"	3.000"	.250"	2.000"	.202 lb
40-2121	40	Clear	6.35mm	19.81mm	8.76mm	9.53mm	114.30mm	33.32mm	47.63mm	#6-32	M8 x 1.25	25.40mm	19.05mm	76.20mm	6.35mm	50.80mm	.0924 kg
40-2121-Black	40	Black	6.35mm	19.81mm	8.76mm	9.53mm	114.30mm	33.32mm	47.63mm	#6-32	M8 x 1.25	25.40mm	19.05mm	76.20mm	6.35mm	50.80mm	.0924 kg

CONTINUE

Grabber™ Door Catch Mounting Plate (Continued)

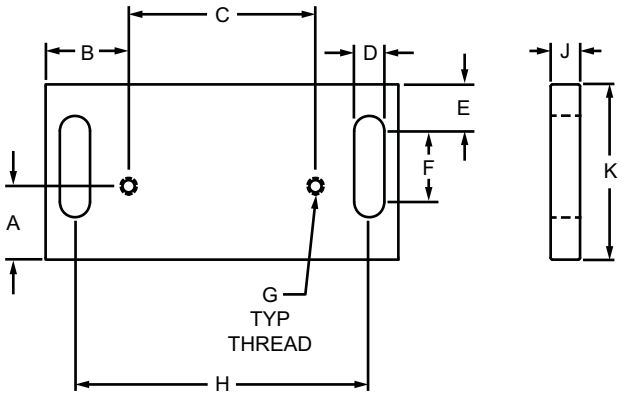

Part No.	Series	Color	A	B	C	D	E	F	G	H	J	K	Weight
2123	10 15	Clear	.625"	.705"	1.590"	.257"	.395"	.605"	#6-32	2.500"	.250"	1.490"	.097 lb
2123-Black	10 15	Black	.625"	.705"	1.590"	.257"	.395"	.605"	#6-32	2.500"	.250"	1.490"	.097 lb
65-2123	25 40	Clear	15.88mm	17.90mm	40.38mm	6.53mm	10.03mm	15.37mm	#6-32	63.50mm	6.35mm	37.85mm	.0440 kg
65-2123-Black	25 40	Black	15.88mm	17.90mm	40.38mm	6.53mm	10.03mm	15.37mm	#6-32	63.50mm	6.35mm	37.85mm	.0440 kg

Material Specifications

Material	Alloy*	Finish	Process
Aluminum	6105-T5	Anodize	Milled

* Or comparable

Suggested Hardware (Mount to T-Slot)

Part No.	Bolt Assy.	Series	Qty.	Bolt	T-Nut
2122	3414	10	2	1/4-20 x 1/2" FHSCS	Economy
2123	3321	10	2	1/4-20 x 1/2" FBHSCS	Economy
2123	3371	15	2	1/4-20 x 3/4" BHSCS	Economy
2121	3412	15	2	5/16-18 x 5/8" FHSCS	Economy
25-2122	75-3507	25	2	M6 x 12mm FHSCS	Economy
65-2123	75-3405	25	2	M6 x 12mm BHSCS	Economy
65-2123	75-3406	40	2	M6 x 16mm BHSCS	Economy
40-2121	75-3508	40	2	M8 x 16mm FHSCS	Economy

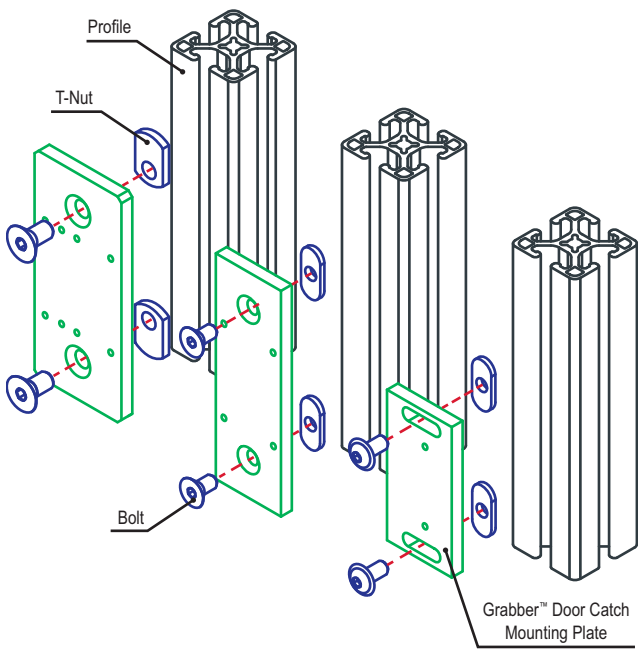

Part Description:

The magnetic door catch is lightweight and ideal for latching plastic panels in place. It has an estimated pull force of 12 pounds (5.443 kilograms). All of the mounting hardware is included for use with a panel. The magnetic door catch requires a panel tap service to mount the striker plate to the plastic panel (page 905).
Tip: Use the magnetic door catch bracket (page 580) to latch a profile to a profile, and refer to the suggested hardware below.

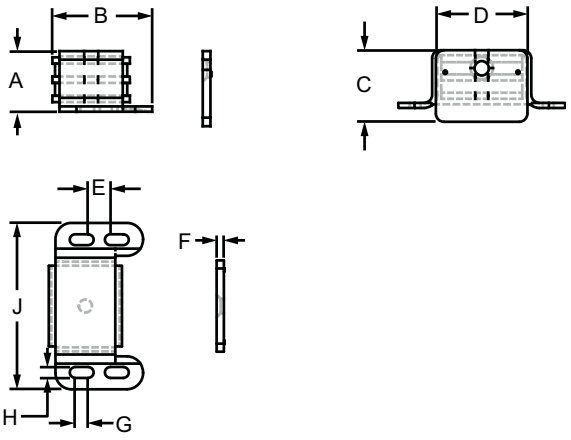

Part No.	Series	Material	Finish	Process	A	B	C	D	E	F	G	H	J	Weight
2090	10 15	Steel	Bright Zinc	Formed	.710"	1.172"	.880"	1.130"	.275"	.090"	.163"	.135"	2.060"	.141 lb
65-2090	25 30 40				18.03mm	29.78mm	22.35mm	28.70mm	6.99mm	2.29mm	4.13mm	3.43mm	52.32mm	.0680 kg
9315	QF				.710"	1.172"	.880"	1.130"	.275"	.090"	.163"	.135"	2.060"	.123 lb

Required Machining Services

Machining Type	Part Machined	Reference Page
Tap	Panel	905

Included Hardware (Mount to T-Slot)

Part No.	Series	Qty.	Description
3005	10 15 25 30 40	2	8-32 x 3/8" BHSCS
3275	10 15 25 30 40	2	Slide-In Economy T-Nut
9325	QF	2	1/4-14 x 3/4" SDS

Included Hardware (Mount Striker Plate to Panel)

Part No.	Series	Qty.	Description
209002	10 15 25 30 40 QF	1	6-32 x 3/8" FHSCS

Suggested Hardware (Mount Striker Plate to Profile)

Series	Part No.	Qty.	Bolt	Part No.	Qty.	T-Nut
10 25	11-4710	1	M4 x 10mm FHSCS	14164	1	Drop-in
15 40	11-4710	1	M4 x 10mm FHSCS	13113	1	Drop-in

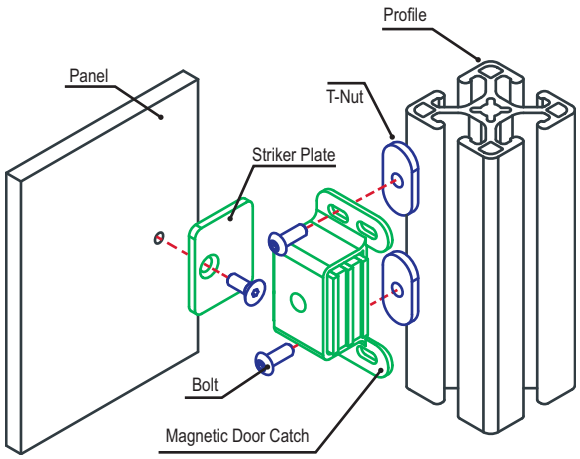

Magnetic Door Catch Bracket

Part Description:

The magnetic door catch bracket is used to attach the magnetic door catch (page 579) to a T-slot profile door. All mounting hardware is included.

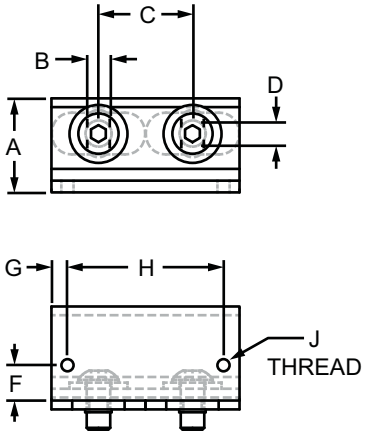

Part No.	Series	Material	Alloy*	Finish	Process	A	B	C	D	E	F	G	H	J	Weight
2745	10 15	Aluminum	6105-T5	Clear Anodize	Milled	1.000"	.250"	1.000"	.250"	1.000"	.375"	.170"	1.660"	8-32	.087 lb
2745-Black	10 15			Black Anodize		1.000"	.250"	1.000"	.250"	1.000"	.375"	.170"	1.660"	8-32	.087 lb
65-2745	25 40			Clear Anodize		25.40mm	6.35mm	25.40mm	6.35mm	25.40mm	9.53mm	4.32mm	42.16mm	8-32	.0372 kg
65-2745-Black	25 40			Black Anodize		25.40mm	6.35mm	25.40mm	6.35mm	25.40mm	9.53mm	4.32mm	42.16mm	8-32	.0372 kg

* Or comparable

Included Hardware (Mount to T-Slot)

Series	Qty.	Part No.	Qty.	Part No.	Qty.	Part No.
10 15	2	3061	2	3382	2	3258
25 40	2	13-6312	2	3859	2	13-6041

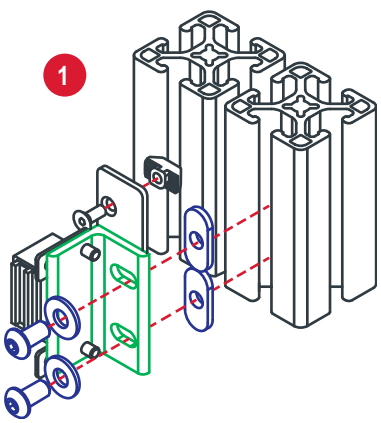

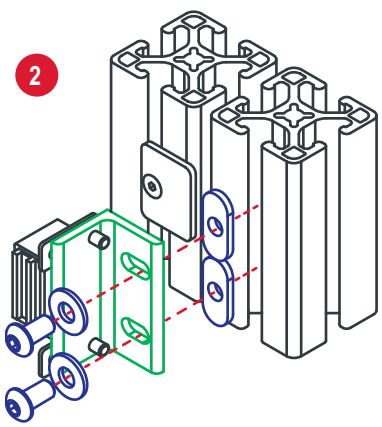

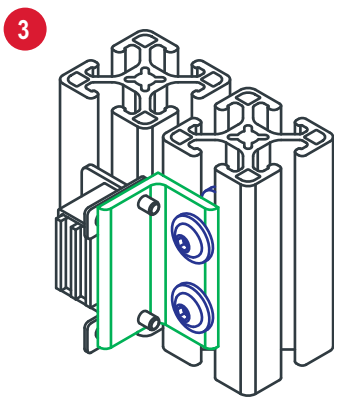

Nylon Magnetic Door Catch

Part Description:

The nylon magnetic door catch consists of a latch and a striker button. The latch is made of molded black fiberglass-reinforced nylon and is a quick-catching method ideal for lightweight plastic panel doors. A panel tap is required to mount the striker button (page 905).

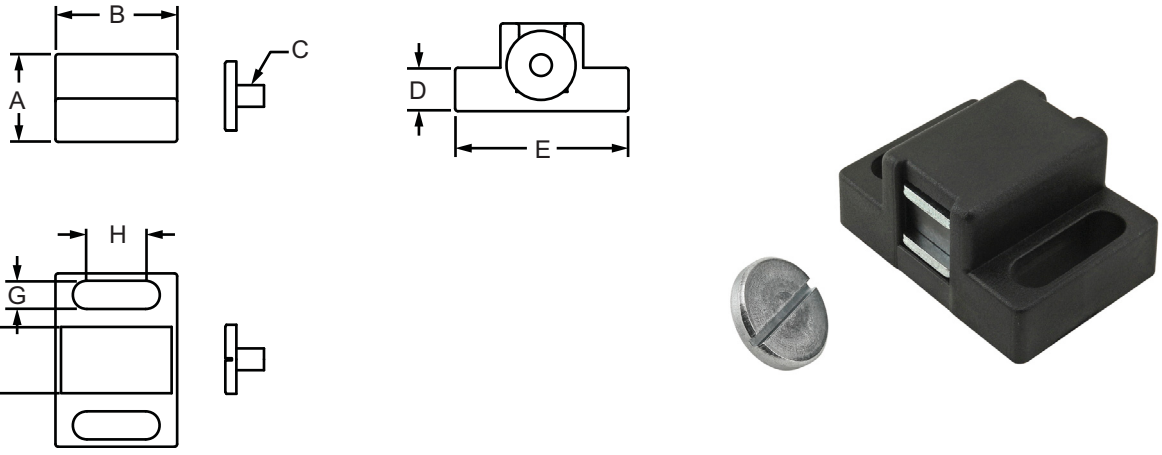

Part No.	Series	Color	A	B	C	D	E	F	G	H	Weight
4486	10 15	Black	.795"	1.102"	M5 x 0.8	.393"	1.570"	.600"	.255"	.532"	.078 lb
65-4486	25 40		20.19mm	28.00mm	M5 x 0.8	10.00mm	39.88mm	15.24mm	6.48mm	13.51mm	.0354 kg

Material Specifications

Material	Finish	Process
Nylon	Black	Injection Molded

Required Machining Services

Machining Type	Part Machined	Reference Page
Tap	Panel	905

Suggested Hardware (Mount to T-Slot)

Part No.	Series	Qty.	Bolt	T-Nut
3493	10	2	1/4-20 x 5/8" SHCS	Economy
3304	15	2	1/4-20 x 3/4" SHCS	Economy
75-3522	25	2	M6 x 16mm SHCS	Economy
75-3596	40	2	M6 x 18mm SHCS	Drop-In

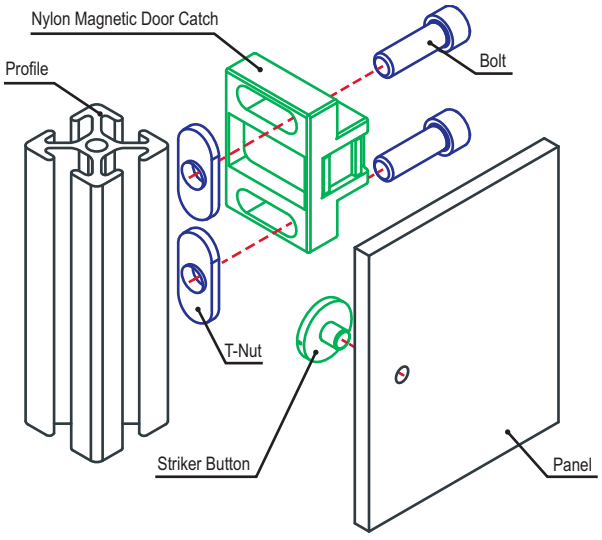

Single Ball Catch

Part Description:

The single ball catch is comprised of a molded black fiberglass-reinforced nylon latch and a zinc-plated steel ball. It is a quick-latching method ideal for lightweight plastic panel doors. The steel ball can latch onto either the top or the front of the catch. The single ball catch requires a panel tap service to mount the steel ball to a plastic panel (page 905).

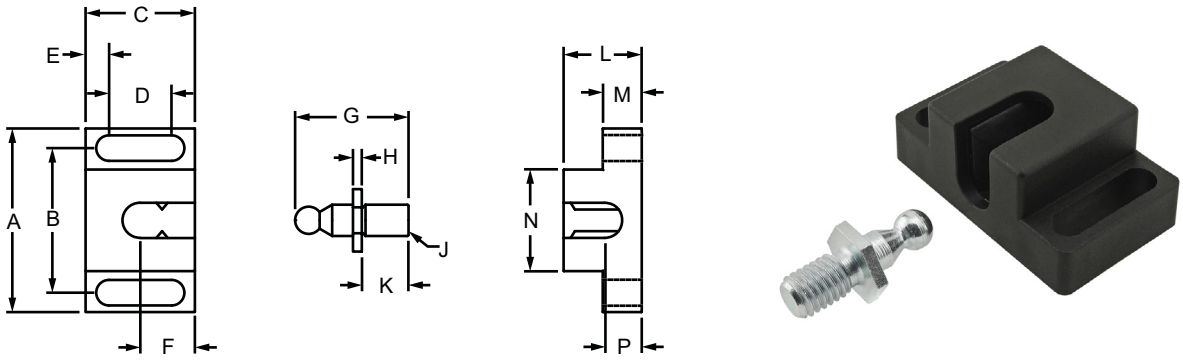

Part No.	Series	A	B	C	D	E	F	G	H	J	K	L	M	N	P	Weight
4487	10 15	1.890"	1.457"	1.102"	.630"	.236"	.512"	1.110"	.087"	M8 x 1.25	.472"	.787"	.394"	.984"	.335"	.062 lb
65-4487	25 30 40	48.00mm	37.00mm	28.00mm	16.00mm	6.00mm	13.00mm	28.20mm	2.20mm	M8 x 1.25	12.00mm	20.00mm	10.00mm	25.00mm	8.50mm	.0281 kg

Material Specifications

Material	Process	Color
Nylon PA	Injection Molded	Black

Required Machining Services

Machining Type	Part Machined	Reference Page
Drill Thru Tap	Panel	905

Suggested Hardware (Mount to T-Slot)

Part No.	Series	Qty.	Bolt	T-Nut
3493	10	2	1/4-20 x 5/8" SHCS	Economy
3304	15	2	1/4-20 x 3/4" SHCS	Economy
75-3522	25 30	2	M6 x 16mm SHCS	Economy
75-3596	40	2	M6 x 18mm SHCS	Drop-In

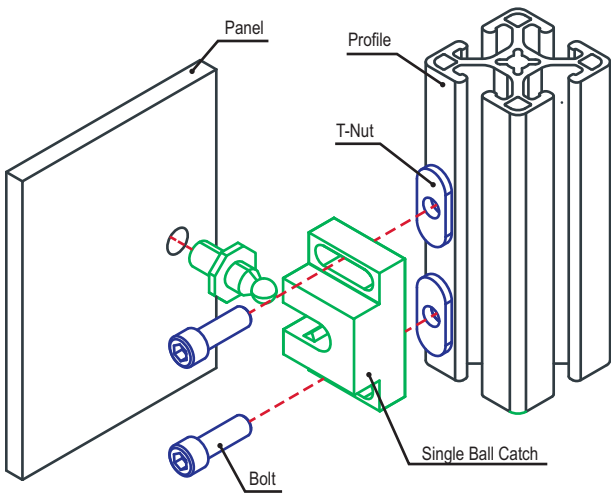

Part Description:

The double ball catch is comprised of a latch and a striker made of molded black fiberglass-reinforced nylon. The catch includes two stainless steel spring-loaded balls that are corrosion-resistant. The suggested hardware to attach the catch to a T-slot can be found below.

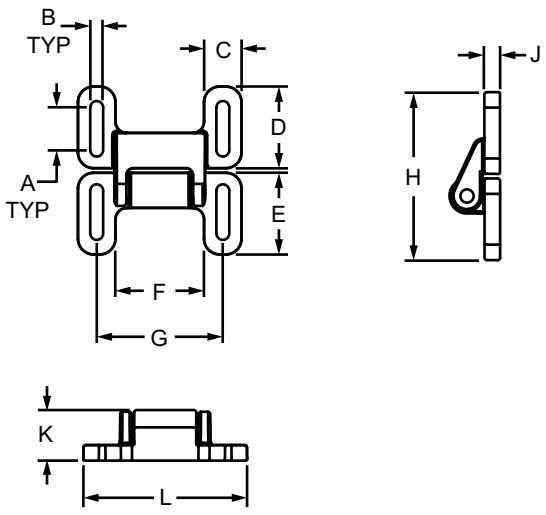

Part No.	Series	A	B	C	D	E	F	G	H	J	K	L	Weight
12019	10 15 25 30 40 45	19.50mm	5.44mm	17.00mm	37.00mm	37.00mm	40.00mm	57.00mm	76.00mm	7.00mm	22.87mm	73.90mm	.0410 kg

Material Specifications

Material	Process	Color
Nylon	Injection Molded	Black

Suggested Hardware (Mount to T-Slot)

Series	Qty.	Part No.	Qty.	Part No.	Qty.	Part No.
10 25	4	11-5314	4	25-1951	4	11-6040
15	4	13-5516	4	13116	4	13-6040
30	4	13-5512	4	13115	4	13-6040
40	4	13-5520	4	13116	4	13-6040
45	4	13-5520	4	13127	4	13-6040

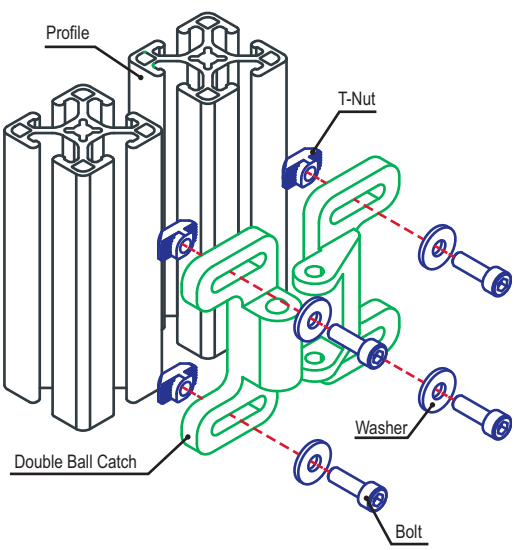

Tension Ball Latch

Part Description:

The tension ball latch is comprised of a latch, striker plate and mounting plate. The latch tension adjusts with two spring-loaded screws allowing the striker to enter from either the front or the side. This is a strong and durable method that creates a secure connection and is ideal for latching. The hardware to attach the hinge to a T-slot is included and no machining services are required.

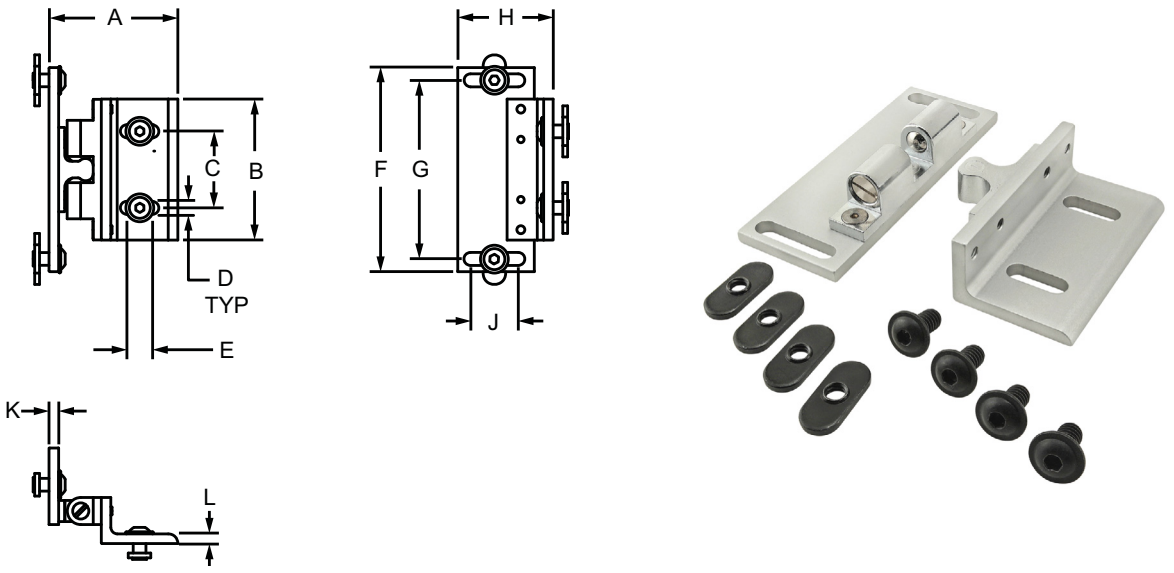

Part No.	Series	Color	A	B	C	D	E	F	G	H	J	K	L	Weight
2134	15 30 40 45	Clear	2.523"	2.764"	1.500"	.257"	.500"	4.000"	3.500"	1.871"	.938"	.188"	.188"	.439 lb
2134-Black	15 30 40 45	Black	2.523"	2.764 "	1.500"	.257"	.500"	4.000"	3.500"	1.871"	.938"	.188"	.188"	.439 lb

Material Specifications

Material	Alloy*	Finish
Aluminum	6105-T5	Anodize

* Or comparable

Included Hardware (Mount to T-Slot)

Part No.	Series	Qty.	Description
3342	15 30 40	4	1/4-20 x 1/2" FBHSCS
3382	15 30 40	4	Slide-In Economy T-Nut

Suggested Hardware (Mount to T-Slot)

Part No.	Series	Qty.	Bolt
13-6316	45	4	M6 x 16mm BHSCS
13129	45	4	Standard Drop-In T-Nut

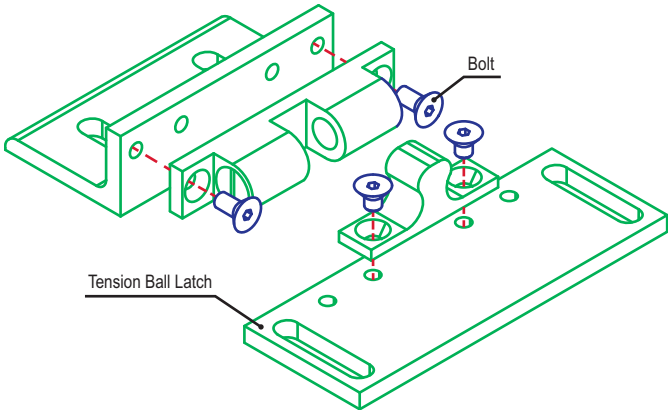

Part Description:

The sliding door lock has an attractive chrome finish and is used with a sliding door track (page 512-513) to lock .250" (6.35mm) sliding panels. This economical security lock is keyed, making it ideal for storage or display cases. Multiple quantities of the sliding door lock are keyed alike.

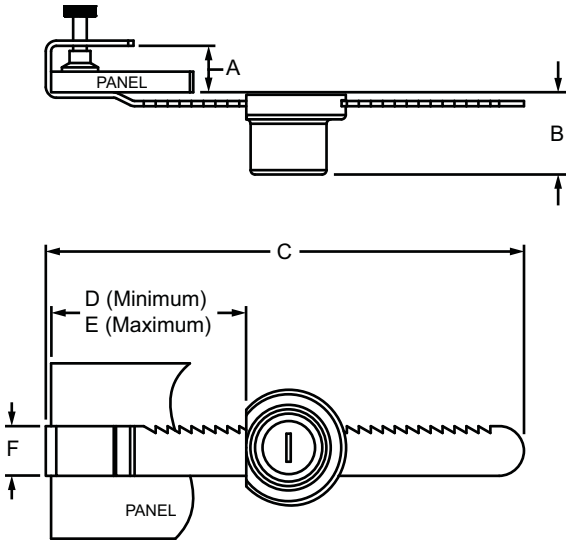

Part No.	Series	Material	Finish	A	B	C	D	E	F	Weight
2057	F M	Steel	Chrome	.500"	.938"	5.500"	1.250"	4.500"	.567"	.210 lb
65-2057	F M			12.70mm	23.81mm	139.70mm	31.75mm	114.30mm	14.40mm	.1006 kg

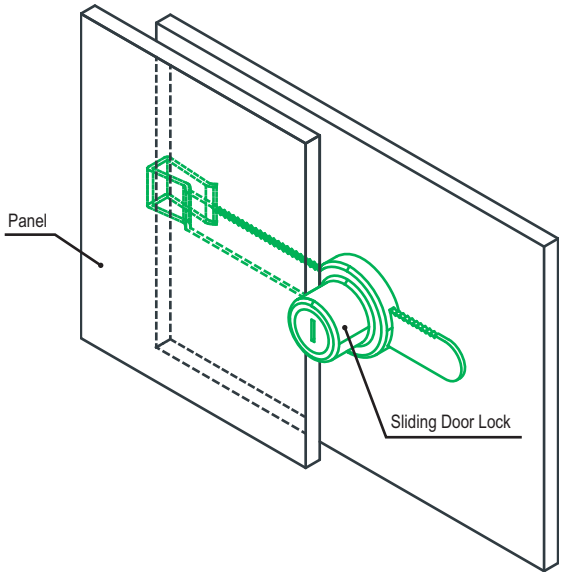

Panel Stiffener

Part Description:

The panel stiffener is used to add rigidity to large .250" (6.35mm) thick panels. It easily connects to a panel using only a soft-face mallet. Panel stiffener comes in a stock length of 72.5 inches (1841.5mm) but is available in custom lengths on page 855.

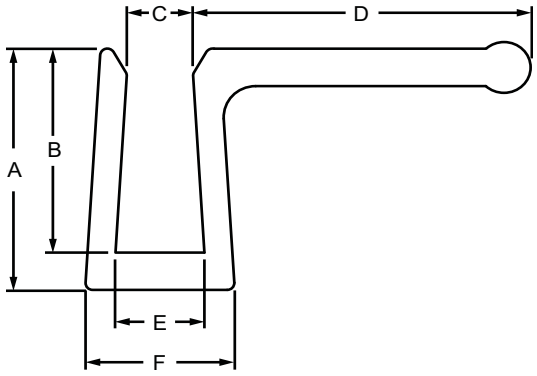

2424, 65-2424

2429, 65-2429

Part No.	Series	A	B	C	D	E	F	Stock Length	Weight
2424	F M	.710"	.600"	.182"	—	.245"	.417"	72.500"	1.015 lb
2429	F M	.710"	.600"	.182"	.953"	.245"	.420"	72.500"	1.813 lb
65-2424	F M	18.03mm	15.24mm	4.62mm	—	6.22mm	10.59mm	1841.50mm	.4604 kg
65-2429	F M	18.03mm	15.24mm	4.62mm	24.21mm	6.22mm	10.67mm	1841.50mm	.8224 kg

Material Specifications

Material	Alloy*	Finish	Process
Aluminum	6105-T5	Clear Anodize	Extruded

* Or comparable

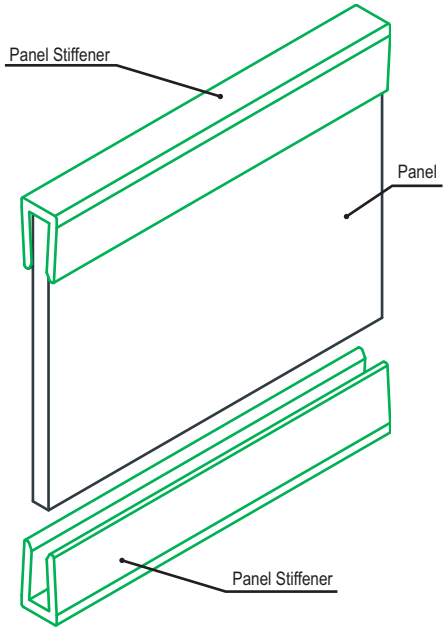

Part Description:

Standard panel gasket is made of high density black polypropylene and recesses in a T-slot from the top or end to secure plastic panels. It is recommended for panels that are .240" (6.096mm) thick. **Tip:** Use an edge radius machining service (page 886) for easy insertion in the T-slot.

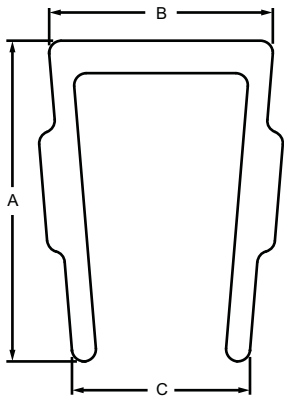

Part No.	Series	Material	Process	Color	A	B	C	Length	Weight
2120	15	Polypropylene	Extruded	Black	.469"	.327"	.260"	72.500"	.118 lb
40-2120	40				11.90mm	8.31mm	6.61mm	1841.50mm	.0547 kg

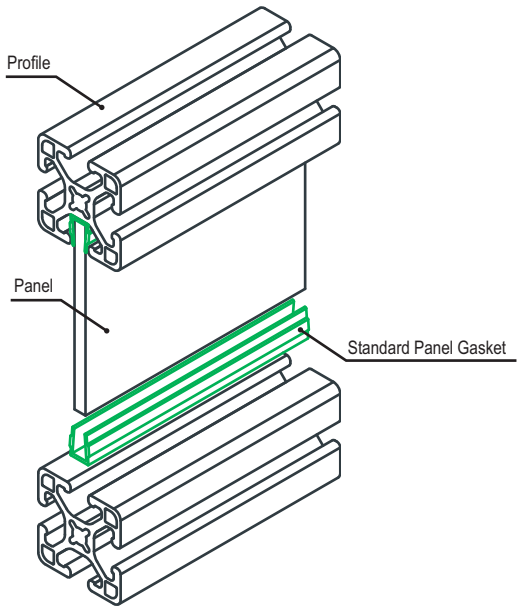

Economy Panel Gasket

Part Description:

Economy panel gasket is available in either a black thermoplastic elostomer or gray silicone rubber. It recesses in a T-slot to secure plastic panels, plates, and mesh and is easily inserted after a panel has been placed in the T-slot. The economy panel gasket can be ordered by the foot (meter) or in 150 foot (45.7 meter) rolls. **Tip:** Cut ends at a 45 degree angle for corner connections to avoid overlap or crashing.

2115

2178

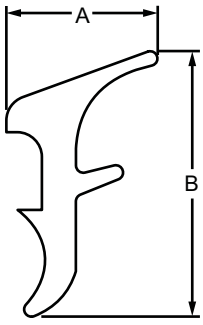

2177

2116

Part No.	Series	Material	Finish	Process	Color	A	B	Length	Weight
2116	10	Thermoplastic Elastomer	Gloss	Extruded	Black	.208"	.362"	per foot	.011 lb / ft
2118	10	Thermoplastic Elastomer			Black	.208"	.362"	per 150 foot roll	2.377 lb
2177	10	Silicone Rubber			Gray	.208"	.362"	per foot	.016 lb / ft
2115	15	Thermoplastic Elastomer			Black	.311"	.547"	per foot	.022 lb / ft
2117	15	Thermoplastic Elastomer			Black	.311"	.547"	per 150 foot roll	4.027 lb
2178	15	Silicone Rubber			Gray	.311"	.547"	per foot	.028 lb / ft
14157	20	Thermoplastic Elastomer			Black	5.80mm	7.60mm	per meter	.0148 kg / m
25-2116	25	Thermoplastic Elastomer			Black	5.28mm	9.19mm	per meter	.0148 kg / m
25-2118	25	Thermoplastic Elastomer			Black	5.28mm	9.19mm	per 45.7 meter roll	1.0218 kg
25-2177	25	Silicone Rubber			Gray	5.28mm	9.19mm	per meter	.0247 kg / m
40-2115	30 40	Thermoplastic Elastomer			Black	7.90mm	13.89mm	per meter	.0370 kg / m
40-2117	30 40	Thermoplastic Elastomer			Black	7.90mm	13.89mm	per 45.7 meter roll	1.8985 kg
40-2178	40	Silicone Rubber			Gray	7.90mm	13.89mm	per meter	.0018 kg / m
14160	45	Thermoplastic Elastomer			Black	11.13mm	19.40mm	per meter	.0018 kg / m

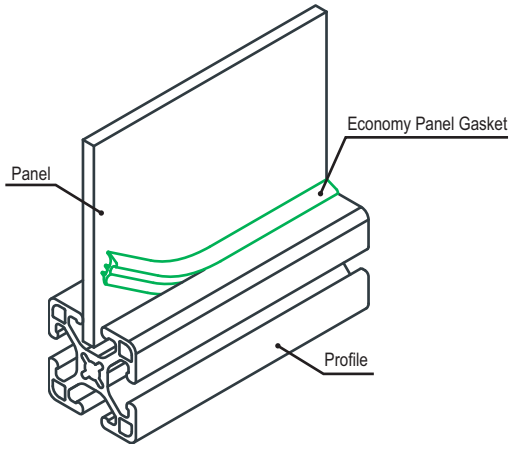

Part Description:

The rubber door seal is made of black EPDM rubber which provides flexibility, making it a longer-lasting option. It has a keyed pad that presses into a T-slot. The rubber door seal is available for 15 and 40 series and is sold by the foot or in 100 foot rolls. **Important:** A minimum door gap of .250" (6.35mm) is required when using the rubber door seal.

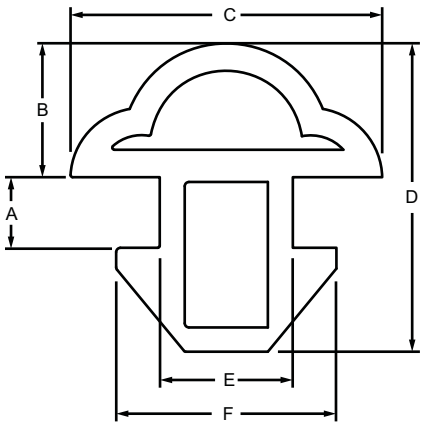

Part No.	Series	Color	A	B	C	D	E	F	Length	Weight
2829	15 40	Black	.170"	.322"	.750"	.742"	.320"	.530"	per foot	.090 lb / ft
2834	15 40		.170"	.322"	.750"	.742"	.320"	.530"	per 100 foot roll	8.393 lb / 100 ft

Material Specifications

Material	Finish	Process
Thermoplastic Elastomer	Matte	Extruded

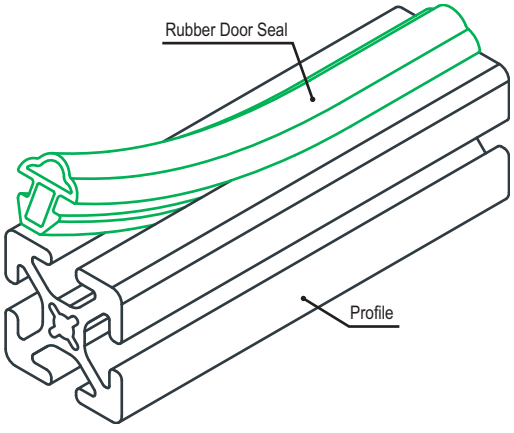

Wire Edge Cover

Part Description:

The wire edge cover is made of black flexible PVC with internal clips; it crimps on the edge of wire mesh or expanded metal panels and is ideal for creating a clean and safe guarding or enclosure access point. Wire edge cover is sold by the foot or meter.

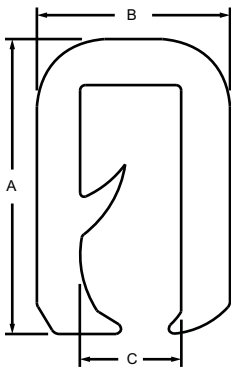

Part No.	Series	Material	Finish	Process	Color	A	B	C	Length	Max Length	Weight
2465	F M	PVC / Aluminum	Pebble Finish	Co-Extrusion	Black	.545"	.357"	.187"	per foot	250 foot roll	.194 lb / ft
65-2465	F M					13.84mm	9.07mm	4.75mm	per meter	76.2 meter roll	.1050 kg / m

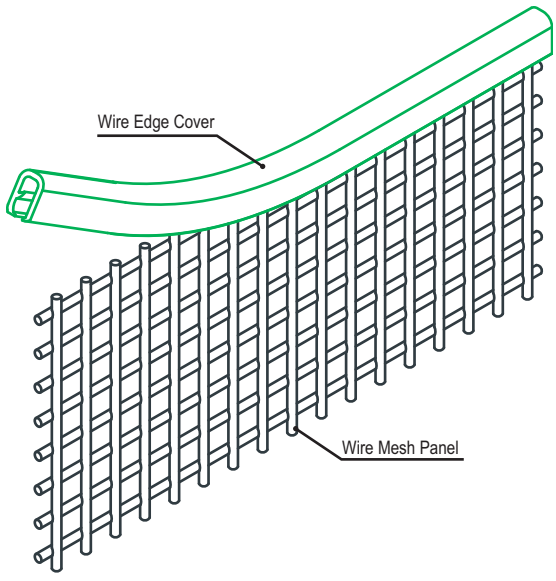

Part Description:

The aluminum door stop is a strong and long-lasting option that prevents a door from swinging too far into the frame. It is corrosion-resistant, lending it to both indoor and outdoor use.

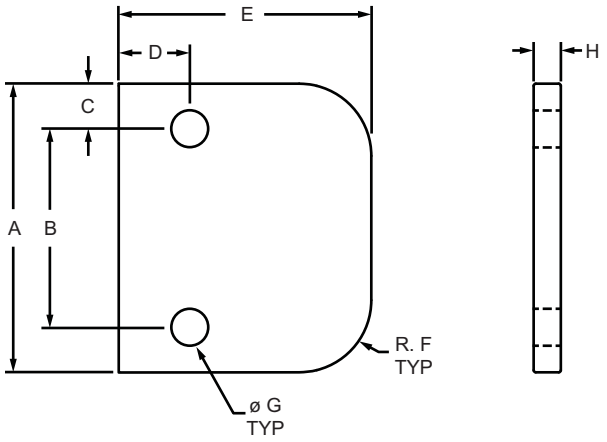

Part No.	Series	Material	Alloy*	Finish	A	B	C	D	E	F	G	H	Weight
4483	10 15 25 30 40 45	Aluminum	6105-T5	Clear Anodize	2.000"	1.375"	.313"	.492"	1.750"	.500"	.257"	.188"	.066 lb
4483-Black	10 15 25 30 40 45			Black Anodize	2.000"	1.375"	.313"	.492"	1.750"	.500"	.257"	.188"	.066 lb

* Or comparable

Suggested Hardware (Mount to T-Slot)

Series	Part No.	Qty.	Bolt	T-Nut	Qty.	T-Nut
10	3061	2	1/4-20 x 1/2" BHSCS	3376	2	Roll-in
15	3063	2	1/4-20 x 5/8" BHSCS	3933	2	Drop-in
25	11-6310	2	M6 x 10mm BHSCS	25-1966	2	Roll-in
30	11-6312	2	M6 x 12mm BHSCS	13117	2	Drop-in
40	11-6316	2	M6 x 16mm BHSCS	13119	2	Drop-in
45	11-6316	2	M6 x 16mm BHSCS	13129	2	Drop-in

Nylon Door Stop

Part Description:

The nylon door stop is a cost-effective option that prevents a door from swinging too far into the frame. It includes rubber bumpers for a soft close.

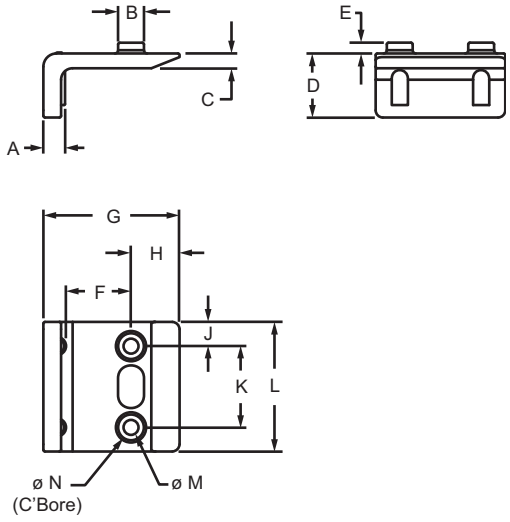

Part No.	Series	Material	Color	A	B	C	D	E	F	G	H	J	K	L	M	N	Weight
2021	15 40	Nylon	Black	.260"	.310"	.177"	.768"	.130"	.780"	1.634"	.582"	.289"	.976"	1.555"	.177"	.307" x .118" DEEP	.280 lb

Suggested Hardware (Mount to T-Slot)

Series	Part No.	Qty.	Bolt	Part No.	Qty.	T-Nut
15 40	11-4312	2	M4 x 12mm BHSCS	25-1941	2	Slide-in

Pictorial Table Of Contents

Building the Base
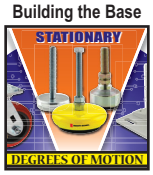

Page 595

Considering Capacity

Page 595

Caster Options

Page 596

Feet/Glide Options

Page 596

Added Stability with Base Plates
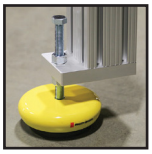
Page 596

Casters and Leveling Feet

Threaded Stem Swivel Caster

Page 597

Furniture Style Caster

Page 598

Flanged Mount Swivel Caster

Page 599

Flanged Mount Rigid Caster

Page 601

Triangular Top Plate Caster

Page 602

Deluxe Flange Mount Swivel Caster

Page 603

Deluxe Flange Mount Rigid Caster

Page 604

Heavy-Duty Flange Mount Swivel Caster

Page 605

Heavy-Duty Flange Mount Rigid Caster

Page 606

High-Capacity Swivel Caster

Page 607

High-Capacity Rigid Caster

Page 608

Leveling Caster

Page 609

Adjustable Position Floor Lock

Page 610

Standard Floor Glide

Page 611

Economy Floor Glide

Page 612

Large Base Glide

Page 613

Mighty Mount®

Page 614

Economy Anti-Vibration Mount

Page 615

Deluxe Leveling Foot

Page 616

Economy Leveling Foot

Page 617

Swivel Foot Base

Page 618

Swivel Foot Base with Mount Holes

Page 619

Swivel Foot Threaded Stem

Page 620

Swivel Foot Extended Base

Page 622

Swivel Foot Trapezoid Base

Page 623

Trapezoid Base Anchor

Page 624

Wedge Floor Anchor

Page 625

Die-Cast Floor Bracket

Page 626

CONTINUE

Pictorial Table Of Contents

Adjustable Die-Cast Floor Bracket

Page 627

Steel Floor Bracket

Page 628

Aluminum Floor Bracket

Page 629

Threaded End Bracket

Page 630

Base Plates

Flange Mount Caster Base Plate

Page 631

Heavy-Duty Flange Mount Caster Base Plate

Page 633

Leveling Caster Base Plate

Page 634

Position Floor Lock Base Plate

Page 636

3 Hole - Center Tap Base Plate

Page 638

5 Hole - Center Tap Base Plate

Page 640

4 Hole - Offset Tap Base Plate

Page 642

2 Hole - Leveling Anchoring Base Plate

Page 644

4 Hole - Leveling Anchoring Base Plate

Page 645

6 Hole - Leveling Anchoring Base Plate

Page 647

Floor Mount Base Plate

Page 648

Economy Floor Mount Base Plate

Page 650

Slotted Economy Floor Mount Base Plate

Page 652

3 Hole - Die-Cast Center Tap Base Plate

Page 653

5 Hole - Die-Cast Center Tap Base Plate

Page 654

Building the Base

Once you've got your design narrowed down it's time to start thinking about your base. There are several varieties available, from casters to furniture glides, leveling feet, or anchors. Some add movement and provide a swivel or a pivot, while others lock or reduce vibration. There are also feet that do just what their name implies; level or anchor your project. You can also choose from options that provide combinations of these features.

You'll want to consider how often your application will need to be in motion or relocated. For example, work carts are constantly moving and turning while furniture only occasionally needs repositioned. In contrast, a guard or larger machine may never need moved or only very infrequently. There may also be a need to immobilize equipment. Determining the frequency of movement will help you decide if you need a caster, a leveling foot, a glide or perhaps a floor lock or anchor.

Consider the Capacity

After you've decided on the type of foot that works best for your project, you'll want to begin narrowing down your product choices. One of the main factors will be the required load capacity. Keep in mind that the ratings are per foot; if you're using multiple bases the weight will be distributed and provide a higher overall capacity.

Find Your Footing

Casters, glides, bases, leveling feet and anchors are a great way to customize your application and design it to fit your specific space and purpose. There are several added features to choose from.

Caster Options

When using a caster, there are options available that swivel or remain rigid. Some of the casters also include locking mechanisms. The leveling caster is a great combination foot that incorporates both mobility and leveling features with one component.

The threaded stem swivel caster is one of many casters with or without brakes that 80/20 offers.

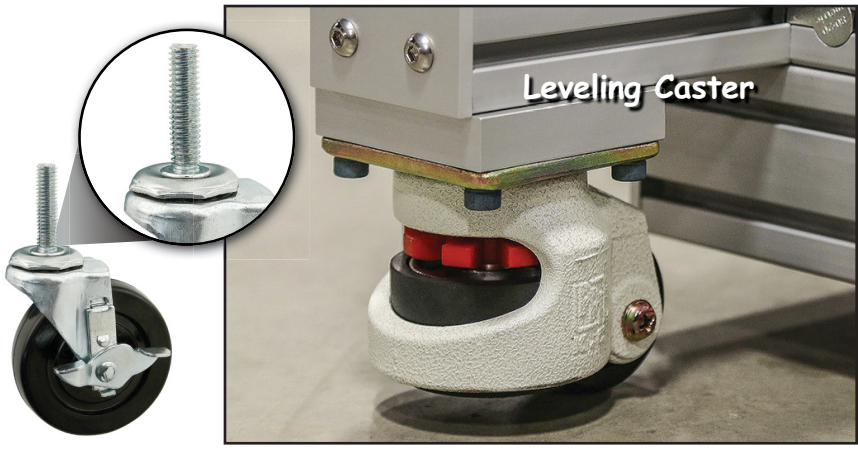

Leveling Feet, Glide Options

Glides, leveling feet and bases come in a wide range of varieties. There are choices suitable for different surfaces such as concrete or carpet or that provide leveling and shock-resistance. Select from options with a pad that help reduce and absorb vibration. There are also heavier and lighter-duty bases to pick from.

Options include feet that are both resistant to vibration and pivot up to 20 degrees to accommodate uneven floors.

Add Stability with a Base Plate

Many feet mount to the profile using a base plate. There are several plates available; this allows you to mount your foot anywhere along the profile T-slot or end, reducing limitations on where you can position the foot.

There are also alternatives that let you attach a foot directly to the profile end without the need for a base plate. You'll want to keep in mind that the profile will require an end tap.

Part Description:

The threaded stem swivel caster is a foot that adds mobility to an application and can mount directly to a T-slot profile end, or to the profile side using a base plate. There are options available with a side or top mount brake kit as well as varieties without a brake. The swivel enables easy movement and pivot turns. It is oil resistant, making it ideal for use in industrial settings such as mobile carts and workstations. For end tap services refer to page 861. For base plate options see pages 638-643 and 653-654.

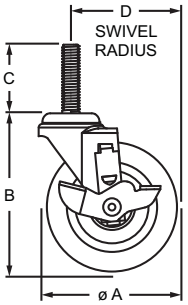

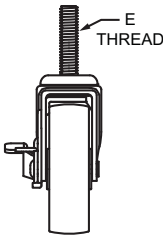

Side Brake

Top Brake

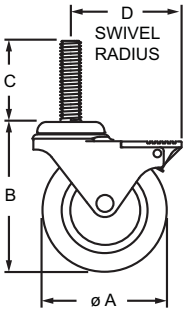

Part No.	Series	Material	Finish	Color	Brake	A	B	C	D	E	Load Height	Load Capacity	Weight
2298	F	Steel / Soft Rubber	Zinc	Black	None	1.625"	2.313"	1.500"	1.625"	3/8-16	2.313"	70.00 lb	.265 lb
2299	F	Steel / Soft Rubber			Top	2.000"	2.531"	1.500"	1.812"	3/8-16	2.531"	70.00 lb	.444 lb
2300	F	Steel / Soft Rubber			Side	3.000"	3.531"	1.500"	2.375"	3/8-16	3.531"	100.00 lb	.585 lb
2310	F	Steel / Soft Rubber			Side	4.000"	4.531"	1.500"	3.250"	7/16-14	4.531"	125.00 lb	1.263 lb
2305	F	Steel / Hard Rubber			Side	4.000"	4.531"	1.500"	3.250"	7/16-14	4.531"	140.00 lb	1.596 lb
2306	F	Steel / Soft Rubber			Side	5.000"	5.531"	1.500"	3.875"	7/16-14	5.531"	125.00 lb	1.641 lb
2307	F	Steel / Hard Rubber			Side	5.000"	5.531"	1.500"	3.875"	7/16-14	5.531"	145.00 lb	1.641 lb
65-2340	M	Steel / Soft Rubber			None	35.00mm	50.00mm	30.00mm	41.27mm	M10 x 1.5	50.00mm	34.02 kg	.1481 kg
65-2341	M	Steel / Soft Rubber			Top	50.00mm	64.30mm	30.00mm	50.80mm	M10 x 1.5	64.30mm	34.02 kg	.2021 kg
65-2342	M	Steel / Soft Rubber			Top	75.00mm	89.70mm	30.00mm	73.03mm	M10 x 1.5	89.70mm	45.36 kg	.3142 kg
65-2343	M	Steel / Soft Rubber			Top	100.00mm	115.10mm	30.00mm	82.55mm	M10 x 1.5	115.10mm	66.00 kg	.5480 kg
65-2344	M	Steel / Soft Rubber			Top	125.00mm	140.50mm	30.00mm	98.43mm	M10 x 1.5	140.50mm	68.00 kg	.7171 kg
65-2345	M	Steel / Hard Rubber			Top	100.00mm	115.10mm	30.00mm	82.55mm	M12 x 1.75	115.10mm	79.00 kg	.5715 kg
65-2346	M	Steel / Hard Rubber			Top	125.00mm	140.50mm	30.00mm	98.43mm	M12 x 1.75	140.50mm	79.00 kg	.7343 kg

Required Machining Services

Machining Type	Machined	Reference Page
End Tap	Mounting Profile	861

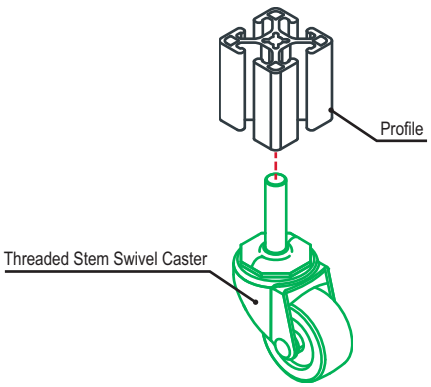

Furniture Style Caster

Part Description:

The furniture style caster is a foot that adds mobility to an application and can mount directly to a T-slot profile end, or to the profile side or end using a base plate. There are options available with or without brakes. The Quick Frame caster connects to a tube profile using a connector (see pages 435-436). The furniture style caster works well in office and home solutions such as desks and furniture. For base plate options see pages 638-643 and 653-654. For end tap services refer to page 861.

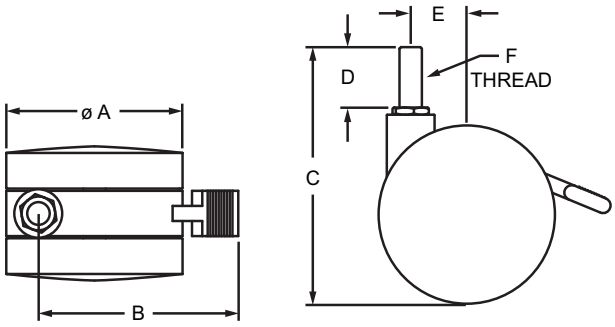

Without Brake
2291, 2293, 2295

With Brake
2292, 2294, 2296

Quick Frame
9361

Part No.	Series	Material	Color	Brake	A	B	C	D	E	F	Load Height	Load Capacity	Weight
2291	F	Steel / Nylon	Black	No	2.850"	—	4.250"	1.000"	.944"	3/8-16	3.250"	165.00 lb	.417 lb
2292	F			Yes	2.850"	3.660"	4.250"	1.000"	.944"	3/8-16	3.250"	165.00 lb	.468 lb
2293	F			No	3.930"	—	5.375"	1.000"	1.370"	3/8-16	4.375"	175.00 lb	.726 lb
2294	F			Yes	3.930"	4.880"	5.375"	1.000"	1.370"	3/8-16	4.375"	175.00 lb	.722 lb
2295	F			No	4.920"	—	6.437"	1.000"	1.370"	1/2-13	5.438"	180.00 lb	1.091 lb
2296	F			Yes	4.920"	5.750"	6.437"	1.000"	1.370"	1/2-13	5.438"	180.00 lb	1.172 lb
9361	QF			No	2.394"	—	3.725"	.984"	.827"	—	2.741"	130.00 lb	.246 lb

Required Machining Services

Machining Type	Machined	Reference Page
End Tap	Mounting Profile	861

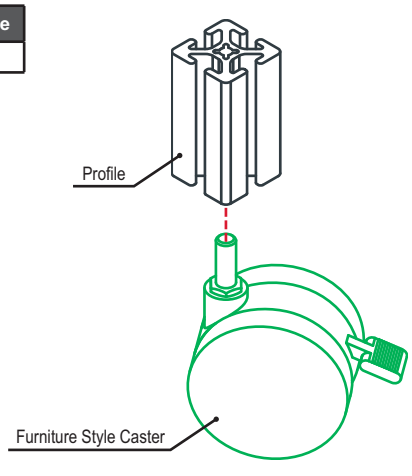

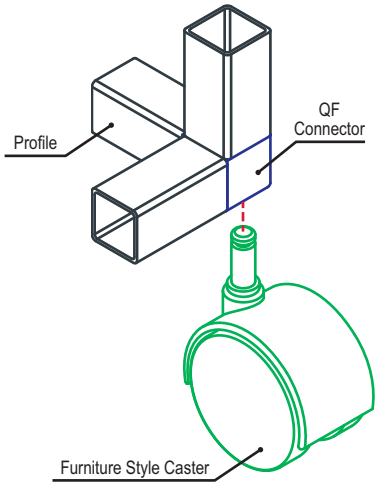

Part Description:

The flange mount swivel caster is a foot that adds mobility to an application and commonly mounts to the T-slot profile end or side using a base plate. The swivel enables easy movement and pivot turns. There are options available with a side or front mount brake kit; the side brake locks only the wheel while the front brake locks both the wheel and the swivel motion. This is ideal for use in industrial settings such as mobile carts and material handling solutions. For base plate options see pages 631-632.

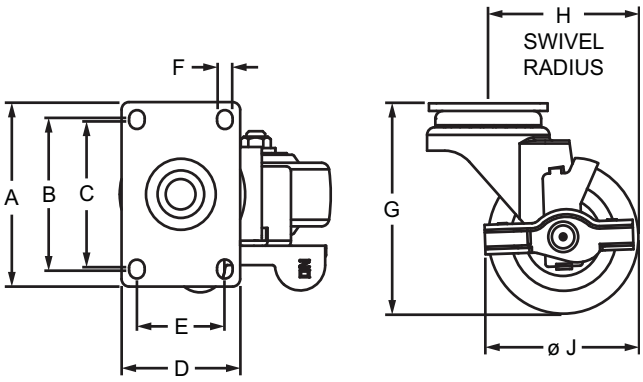

Part No.	Series	Brake	A	B	C	D	E	F	G	H	J	Load Height	Load Capacity	Weight
2317	F	Side	3.625"	3.000"	2.875"	2.375"	1.750"	.328"	4.125"	3.000"	3.000"	4.125"	150.00 lb	1.725 lb
2318	F		3.625"	3.000"	2.875"	2.375"	1.750"	.328"	4.125"	3.000"	3.000"	4.125"	200.00 lb	1.740 lb.
65-2317	M		92.08mm	76.20mm	73.03mm	60.33mm	44.45mm	8.33mm	104.78mm	76.20mm	92.08mm	104.78mm	68.04 kg	.7668 kg
65-2318	M		92.08mm	76.20mm	73.03mm	60.33mm	44.45mm	8.33mm	104.78mm	76.20mm	92.08mm	104.78mm	90.72 kg	.7790 kg

Material Specifications

Part No.	Material	Finish	Color
2317	Steel / Soft Rubber	Zinc	Black
2318	Steel / Hard Rubber		
65-2317	Steel / Soft Rubber		
65-2318	Steel / Hard Rubber		

Suggested Hardware (Mount to Base Plate)

Part No.	Series	Qty.	Bolt
3110	F	4	5/16-18 x 5/8" SHCS
13-8520	M	4	M8 x 20mm SHCS

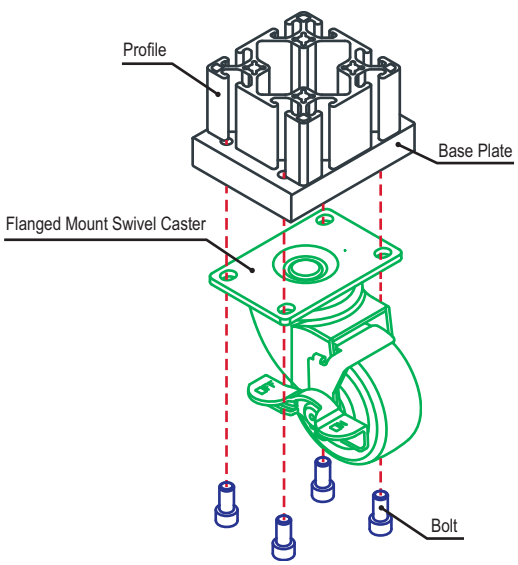

CONTINUE

Flanged Mount Swivel Caster (Continued)

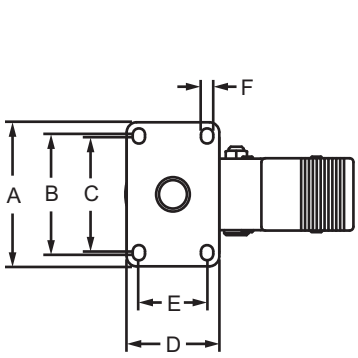

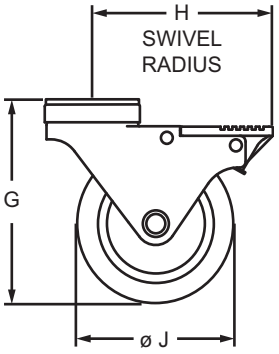

Part No.	Series	Brake	A	B	C	D	E	F	G	H	J	Load Height	Load Capacity	Weight
2321	F	Front	3.625"	3.000"	2.875"	2.375"	1.750"	.328"	5.125"	4.625"	4.000"	5.125"	255.00 lb	1.939 lb
2323	F		3.625"	3.000"	2.875"	2.375"	1.750"	.328"	6.250"	4.625"	5.000"	6.250"	280.00 lb	2.202 lb
65-2321	M		92.08mm	76.20mm	73.03mm	60.33mm	44.45mm	8.33mm	133.18mm	117.48mm	101.60mm	133.18mm	115.67 kg	.8743 kg
65-2323	M		92.08mm	76.20mm	73.03mm	60.33mm	44.45mm	8.33mm	155.58mm	117.48mm	127.00mm	158.45mm	127.01 kg	1.0115 kg

Material Specifications

Material	Finish	Color
Steel / Soft Rubber	Zinc	Black

Suggested Hardware (Mount to Base Plate)

Part No.	Series	Qty.	Bolt
3110	F	4	5/16-18 x 5/8" SHCS
13-8520	M	4	M8 x 20mm SHCS

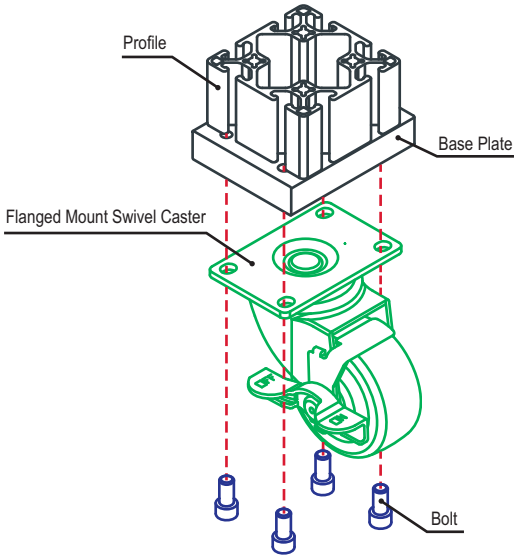

Part Description:

The flange mount rigid caster is a foot that adds mobility to an application and commonly mounts to the T-slot profile end or side using a base plate. This is ideal for use in industrial settings such as mobile carts and material handling solutions. It is commonly used in conjunction with swivel casters to create applications that easily pivot. For base plate options see pages 631-632.

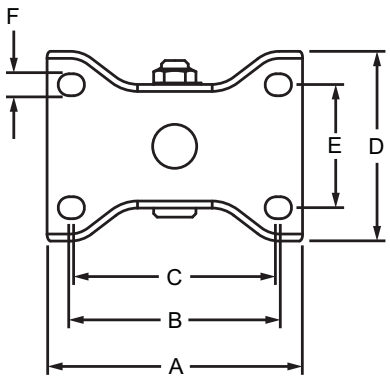

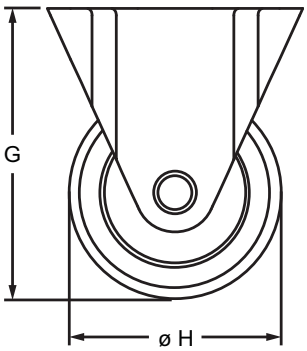

Part No.	Series	A	B	C	D	E	F	G	H	Load Height	Load Capacity	Weight
2311	10 15	3.625"	3.000"	2.875"	2.375"	1.750"	.328"	4.125"	3.000"	4.125"	220.00 lb	1.055 lb
2312	10 15	3.625"	3.000"	2.875"	2.375"	1.750"	.328"	4.125"	3.000"	4.125"	150.00 lb	1.057 lb
2314	10 15	3.625"	3.000"	2.875"	2.375"	1.750"	.328"	5.125"	4.000"	5.125"	255.00 lb	1.151 lb
2316	10 15	3.625"	3.000"	2.875"	2.375"	1.750"	.328"	6.250"	5.000"	6.250"	280.00 lb	1.411 lb
65-2312	25 40	92.08mm	76.20mm	73.03mm	60.33mm	44.45mm	8.33mm	104.78mm	76.20mm	104.78mm	68.04 kg	.4781 kg
65-2314	25 40	92.08mm	76.20mm	73.03mm	60.33mm	44.45mm	8.33mm	130.18mm	101.60mm	130.18mm	115.67 kg	.5130 kg
65-2316	25 40	92.08mm	76.20mm	73.03mm	60.33mm	44.45mm	8.33mm	136.36mm	127.00mm	136.36mm	127.01 kg	.6482 kg

Material Specifications

Part No.	Material	Finish	Color
2311	Steel / Soft Rubber	Zinc	Black
2312	Steel / Hard Rubber		Black
2314	Steel / Soft Rubber		Gray
2316	Steel / Soft Rubber		Gray
65-2312	Steel / Hard Rubber		Black
65-2314	Steel / Soft Rubber		Gray
65-2316	Steel / Soft Rubber		Gray

Suggested Hardware (Mount to Base Plate)

Part No.	Series	Qty.	Bolt
3110	10 15	4	5/16-18 x 5/8" SHCS
13-8520	25 40	4	M8 x 20mm SHCS

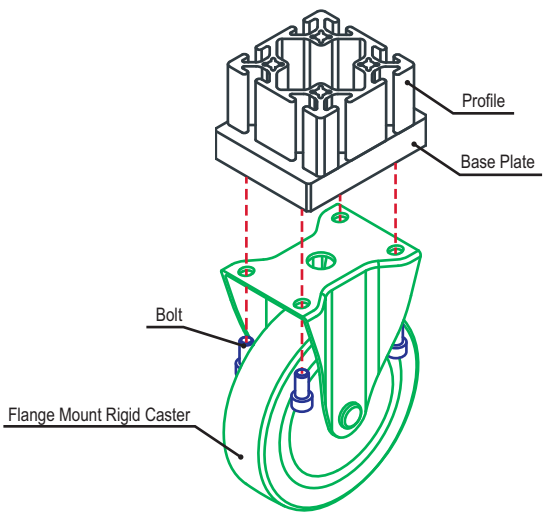

Triangular Top Plate Caster

Part Description:

The triangular top plate caster is a foot that adds mobility to an application and can mount directly to a T-slot profile without a base plate. The slotted holes allow for easy positioning along the profile. The swivel enables easy movement and pivot turns, while the locking tab stops the wheel and the swivel rotation when depressed. The triangular shape provides additional clearance, making it ideal for use in tight spaces.

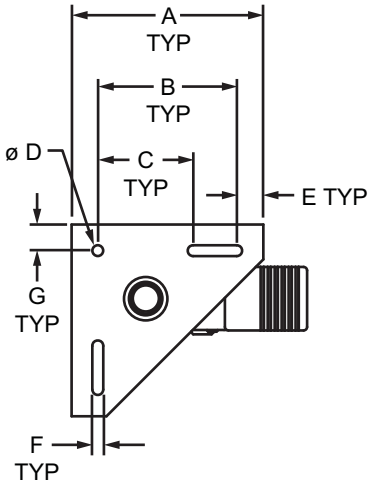

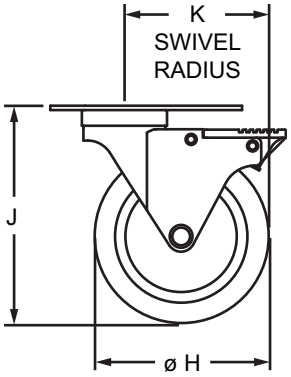

Part No.	Series	A	B	C	D	E	F	G	H	J	K	Load Height	Load Capacity	Weight
2337	15	5.500"	4.000"	2.750"	.313"	.766"	.313"	.750"	4.000"	5.125"	4.625"	5.125"	250.00 lb	2.413 lb
2338	15	5.500"	4.000"	2.750"	.313"	.766"	.313"	.750"	5.000"	6.250"	4.625"	6.250"	300.00 lb	2.664 lb
65-2337	30 40 45	139.70mm	101.60mm	69.85mm	7.95mm	19.46mm	7.95mm	19.05mm	101.60mm	130.18mm	117.48mm	130.18mm	113.64 kg	1.0890 kg
65-2338	30 40 45	139.70mm	101.60mm	69.85mm	7.95mm	19.46mm	7.95mm	19.05mm	127.00mm	158.75mm	117.48mm	158.75mm	136.36 kg	1.2252 kg

Material Specifications

Material	Finish	Color
Steel / Soft Rubber	Zinc	Gray

Suggested Hardware (Mount to T-Slot)

Part No.	Series	Qty.	Bolt	T-Nut
3462	15	3	5/16-18 x 5/8" SHCS, Washer	Economy
75-3620	30	3	M8 x 12mm SHCS	Slide-In
75-3625	40	3	M8 x 16mm SHCS	Slide-In
75-3623	45	3	M8 x 16mm SHCS	Drop-In

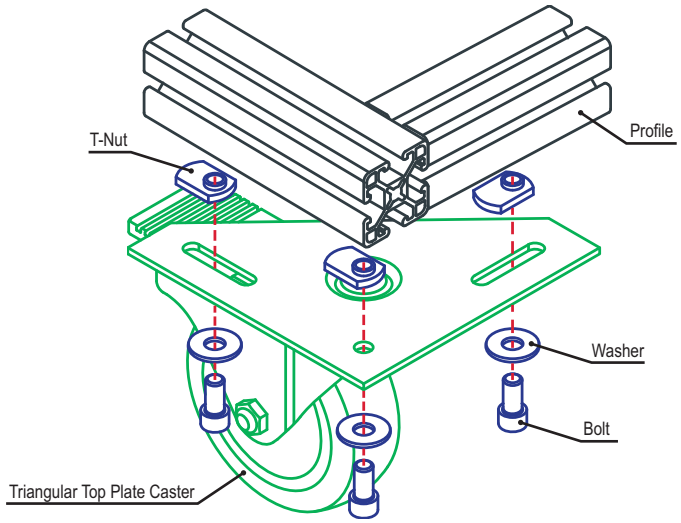

Part Description:

The deluxe flange mount swivel caster is a foot that adds mobility to an application and commonly mounts to the T-slot profile end or side using a base plate. The polyurethane wheels and hardened raceways enable a smooth motion while the swivel allows easy movement and pivot turns. The deluxe flange mount caster includes a brake. It is ideal for use in industrial settings such as mobile carts and material handling solutions. For base plate options see pages 631-632.

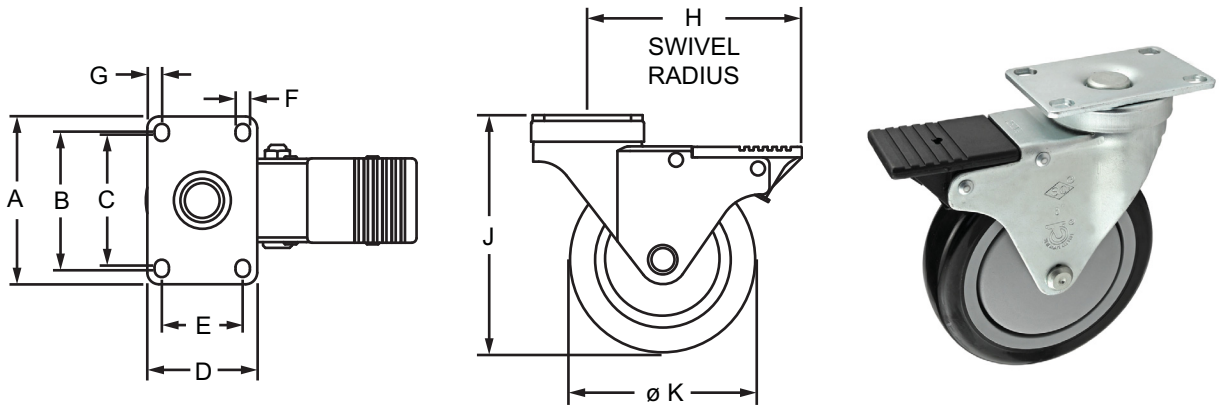

Part No.	Series	A	B	C	D	E	F	G	H	J	K	Load Height	Load Capacity	Weight
2333	F	3.625"	3.000"	2.875"	2.375"	1.750"	.328"	.313"	4.625"	5.125"	4.000"	5.125"	250.00 lb	1.997 lb
2334	F	3.625"	3.000"	2.875"	2.375"	1.750"	.328"	.313"	4.625"	6.250"	5.000"	6.250"	300.00 lb	2.229 lb
65-2333	M	92.08mm	76.20mm	73.03mm	60.33mm	44.45mm	8.33mm	7.94mm	117.48mm	130.18mm	101.60mm	130.18mm	113.64 kg	.9071 kg
65-2334	M	92.08mm	76.20mm	73.03mm	60.33mm	44.45mm	8.33mm	7.94mm	117.48mm	158.75mm	127.00mm	158.75mm	136.36 kg	1.0043 kg

Material Specifications

Material	Finish	Color
Steel / Polyurethane	Zinc	Black on Gray

Suggested Hardware (Mount to Base Plate)

Part No.	Series	Qty.	Bolt
3110	F	4	5/16-18 x 5/8" SHCS
11-8512	M	4	M8 x 12mm SHCS

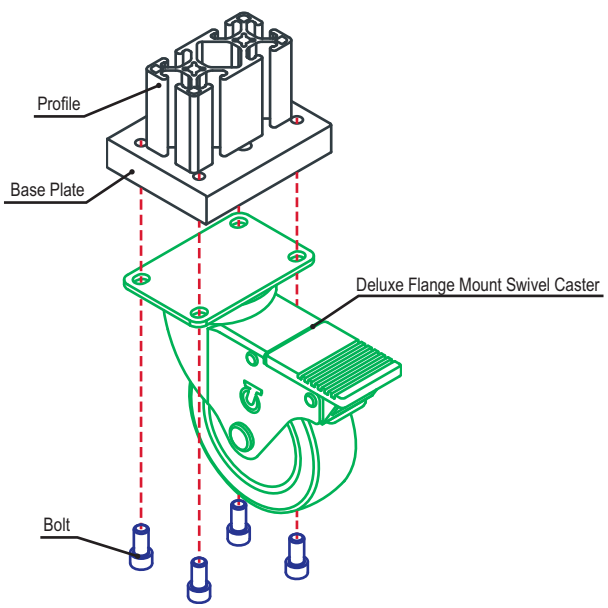

Deluxe Flange Mount Rigid Caster

Part Description:

The deluxe flange mount rigid caster is a foot that adds mobility to an application and commonly mounts to the T-slot profile end or side using a base plate. The polyurethane wheels and hardened raceways enable a smooth motion. It is ideal for use in industrial settings such as mobile carts and material handling solutions. For base plate options see pages 631-632.

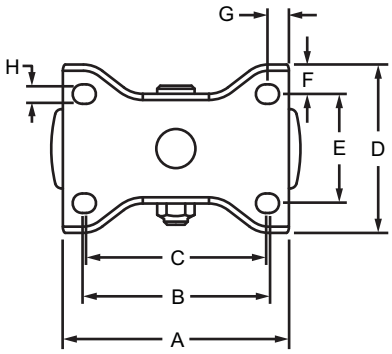

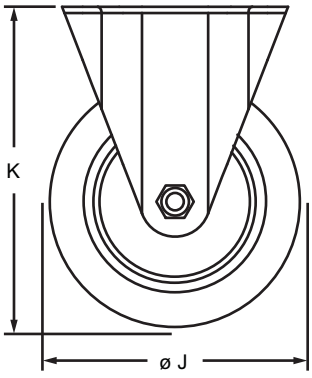

Part No.	Series	A	B	C	D	E	F	G	H	J	K	Load Height	Load Capacity	Weight
2335	F	3.625"	3.000"	2.875"	2.688"	1.750"	.469"	.313"	.328"	4.000"	5.125"	5.125"	300.00 lb	1.164 lb
2336	F	3.625"	3.000"	2.875"	2.688"	1.750"	.469"	.313"	.328"	5.000"	6.250"	6.250"	300.00 lb	1.386 lb
65-2335	M	92.08mm	76.20mm	73.03mm	68.28mm	44.45mm	11.91mm	7.94mm	8.33mm	101.60mm	130.18mm	130.18mm	113.64 kg	.5398 kg
65-2336	M	92.08mm	76.20mm	73.03mm	68.28mm	44.45mm	11.91mm	7.94mm	8.33mm	127.00mm	158.75mm	158.75mm	136.36 kg	.6299 kg

Material Specifications

Material	Finish	Color
Steel / Polyurethane	Zinc	Black on Gray

Suggested Hardware (Mount to Base Plate)

Part No.	Series	Qty.	Bolt
3110	F	4	5/16-18 x 5/8" SHCS
11-8512	M	4	M8 x 12mm SHCS

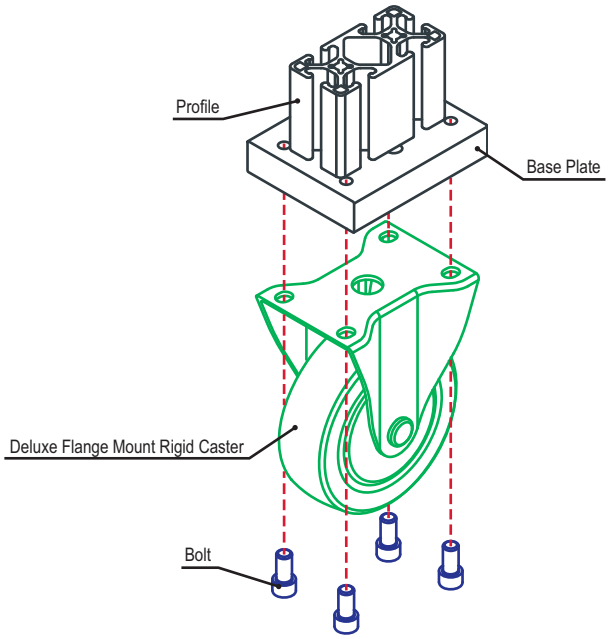

Part Description:

The heavy-duty flange mount swivel caster is a foot that adds mobility to an application and commonly mounts to the T-slot profile end or side using a base plate. The swivel enables easy movement and pivot turns while the design allows for quick access to lubrication fittings. It is a heavy-duty and oil resistant option with a higher ground clearance. It's ideal for use in industrial settings such as large workstations and material handling solutions. For base plate options see page 633.

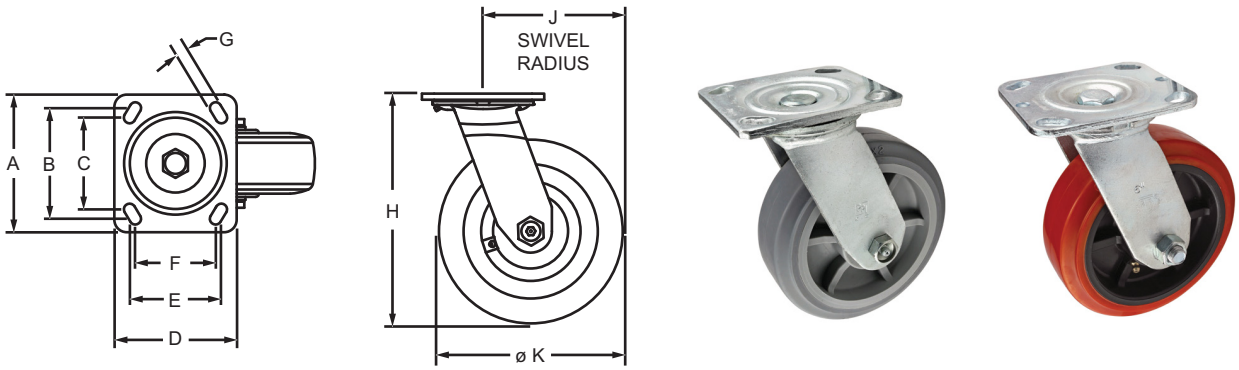

Part No.	Series	A	B	C	D	E	F	G	H	J	K	Load Height	Load Capacity	Weight
2700	F	4.500"	3.625"	3.000"	4.000"	3.000"	2.625"	.420"	6.500"	3.875"	5.000"	6.500"	375.00 lb	4.320 lb
2704	F	4.500"	3.625"	3.000"	4.000"	3.000"	2.625"	.420"	7.500"	4.562"	6.000"	7.500"	550.00 lb	4.585 lb
2708	F	4.500"	3.625"	3.000"	4.000"	3.000"	2.625"	.420"	6.500"	3.875"	5.000"	6.500"	700.00 lb	4.419 lb
2712	F	4.500"	3.625"	3.000"	4.000"	3.000"	2.625"	.420"	7.500"	4.562"	6.000"	7.500"	900.00 lb	4.766 lb
40-2700	M	114.30mm	92.08mm	76.20mm	101.60mm	76.20mm	66.68mm	10.67mm	165.10mm	98.43mm	127.00mm	165.10mm	117.45 kg	2.0126 kg
40-2704	M	114.30mm	92.08mm	76.20mm	101.60mm	76.20mm	66.68mm	10.67mm	190.50mm	115.88mm	152.40mm	190.50mm	250.00 kg	2.0561 kg
40-2708	M	114.30mm	92.08mm	76.20mm	101.60mm	76.20mm	66.68mm	10.67mm	165.10mm	98.43mm	127.00mm	165.10mm	318.18 kg	2.0300 kg
40-2712	M	114.30mm	92.08mm	76.20mm	101.60mm	76.20mm	66.68mm	10.67mm	190.50mm	115.88mm	152.40mm	190.50mm	409.09 kg	2.2244 kg

Material Specifications

Part No.	Material	Finish	Color
2700	Steel / Soft Rubber	Zinc	Gray
2704			
2708	Steel / Hard Rubber		Red on Black
2712			
40-2700	Steel / Soft Rubber		Gray
40-2704			
40-2708	Steel / Hard Rubber		Red on Black
40-2712			

Suggested Hardware (Mount to Base Plate)

Part No.	Series	Qty.	Bolt
3125	F	4	3/8-16 x 3/4" SHCS
13-1520	M	4	M10 x 20mm SHCS

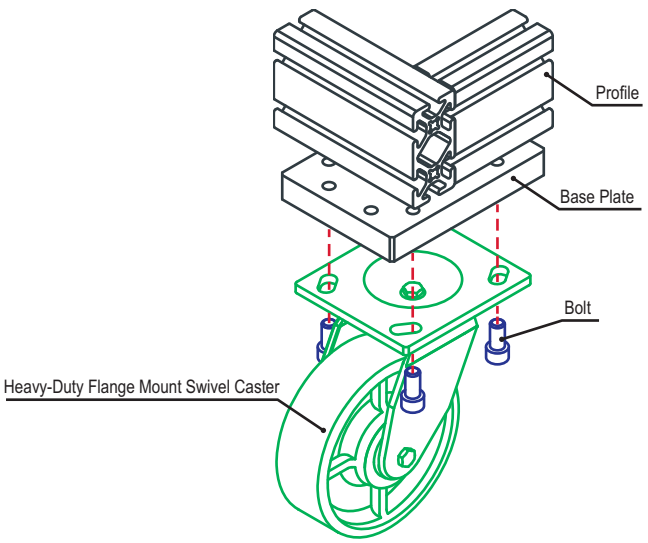

Heavy-Duty Flange Mount Rigid Caster

Part Description:

The heavy-duty flange mount rigid caster is a foot that adds mobility to an application and commonly mounts to the T-slot profile end or side using a base plate. The design allows for easy access to lubrication fittings. It is a heavy-duty and oil resistant option with a higher ground clearance. It's ideal for use in industrial settings such as large workstations and material handling solutions. For base plate options see page 633.

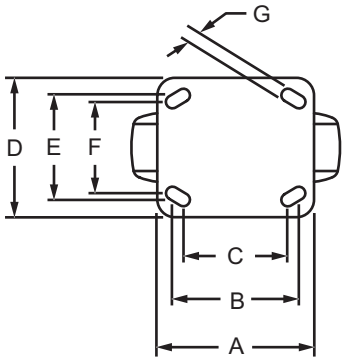

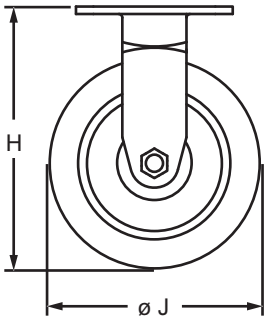

Part No.	Series	A	B	C	D	E	F	G	H	J	Load Height	Load Capacity	Weight
2701	F	4.437"	3.625"	3.000"	4.000"	3.000"	2.625"	.420"	6.500"	5.000"	6.500"	500.00 lb	3.455 lb
2705	F	4.437"	3.625"	3.000"	4.000"	3.000"	2.625"	.420"	7.500"	6.000"	7.500"	500.00 lb	3.716 lb
2709	F	4.437"	3.625"	3.000"	4.000"	3.000"	2.625"	.420"	6.500"	5.000"	6.500"	800.00 lb	3.647 lb
2713	F	4.437"	3.625"	3.000"	4.000"	3.000"	2.625"	.420"	7.500"	6.000"	7.500"	900.00 lb	3.935 lb
40-2701	M	112.70mm	92.08mm	76.20mm	101.60mm	76.20mm	66.68mm	10.67mm	165.10mm	127.00mm	165.10mm	227.27 kg	1.5549 kg
40-2705	M	112.70mm	92.08mm	76.20mm	101.60mm	76.20mm	66.68mm	10.67mm	190.50mm	152.40mm	190.50mm	227.27 kg	1.6883 kg
40-2709	M	112.70mm	92.08mm	76.20mm	101.60mm	76.20mm	66.68mm	10.67mm	165.10mm	127.00mm	165.10mm	363.64 kg	1.6433 kg
40-2713	M	112.70mm	92.08mm	76.20mm	101.60mm	76.20mm	66.68mm	10.67mm	190.50mm	152.40mm	190.50mm	409.09 kg	1.8516 kg

Material Specifications

Part No.	Material	Finish	Color
2701	Steel / Soft Rubber	Zinc	Gray
2705			
2709	Steel / Hard Rubber		Red on Black
2713			
40-2701	Steel / Soft Rubber		Gray
40-2705			
40-2709	Steel / Hard Rubber		Red on Black
40-2713			

Suggested Hardware (Mount to Base Plate)

Part No.	Series	Qty.	Bolt
3125	F	4	3/8-16 x 3/4" SHCS
13-1520	M	4	M10 x 20mm SHCS

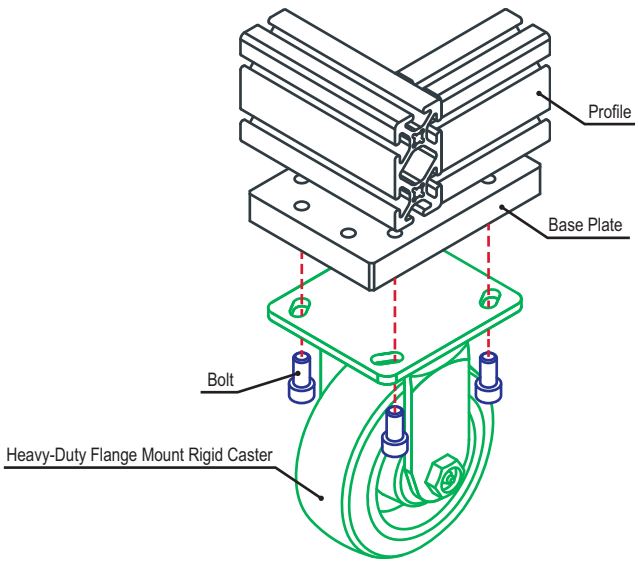

Part Description:

The high-capacity swivel caster is a foot that adds mobility to an application and commonly mounts to the T-slot profile end or side using a base plate. It is made for higher loads and provides smooth rolling movement, enabling easy turns. The polyurethane wheel is resistant to machining chips from the floor. The wheel has a capacity of up to 1000 pounds (453.59 kilograms), making it ideal for use in industrial settings such as mobile carts and material handling solutions. For base plate options see page 633.

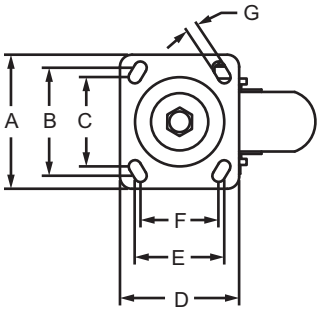

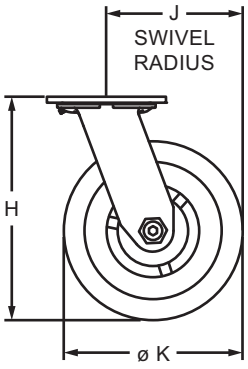

Part No.	Series	Material	A	B	C	D	E	F	G	H	J	K	Load Capacity	Weight
2703	15 40	Steel / Polyurethane	4.500"	3.625"	3.000"	4.000"	3.000"	2.625"	.420"	7.500"	4.562"	6.000"	1000 lb	5.727 lb

Suggested Hardware (Mount to Base Plate)

Part No.	Series	Qty.	Bolt
3125	15	4	3/8-16 x 3/4" SHCS
13-1520	40	4	M10 x 20mm SHCS

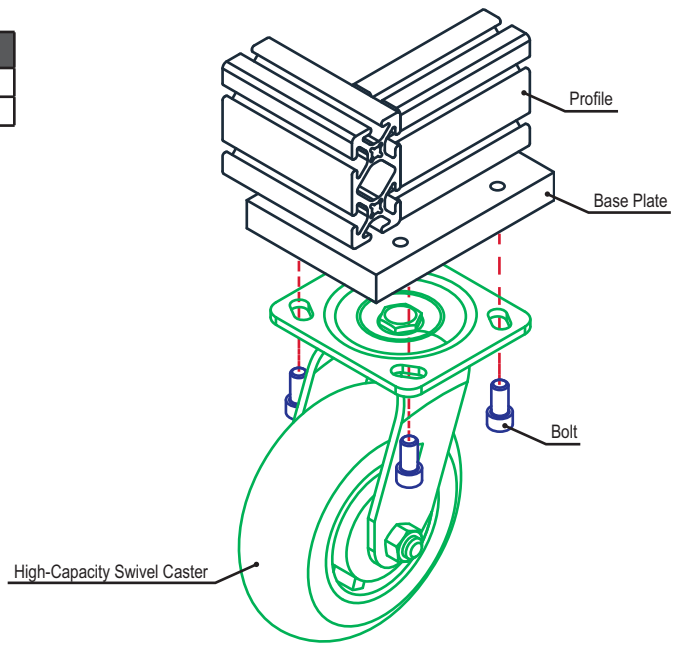

High-Capacity Rigid Caster

Part Description:

The high-capacity rigid caster is a foot that adds mobility to an application and commonly mounts to the T-slot profile end or side using a base plate. It can be used for higher loads and has a capacity of up to 1000 pounds (453.59 kilograms), making it ideal for use in industrial settings such as mobile carts and material handling solutions. The polyurethane wheel is resistant to machining chips from the floor. It is commonly used in conjunction with swivel casters to create applications that pivot easily. For base plate options see page 633.

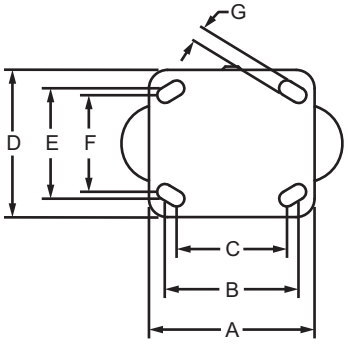

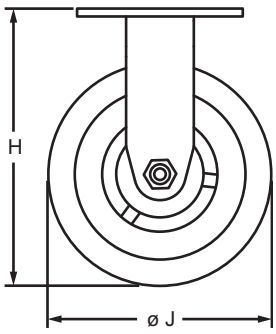

Part No.	Series	Material	A	B	C	D	E	F	G	H	J	Load Capacity	Weight
2702	15 40	Steel / Polyurethane	4.500"	3.625"	3.000"	4.000"	3.000"	2.625"	.420"	7.500"	6.000"	1000 lb	5.009 lb

Suggested Hardware (Mount to Base Plate)

Part No.	Series	Qty.	Bolt
3125	15	4	3/8-16 x 3/4" SHCS
13-1520	40	4	M10 x 20mm SHCS

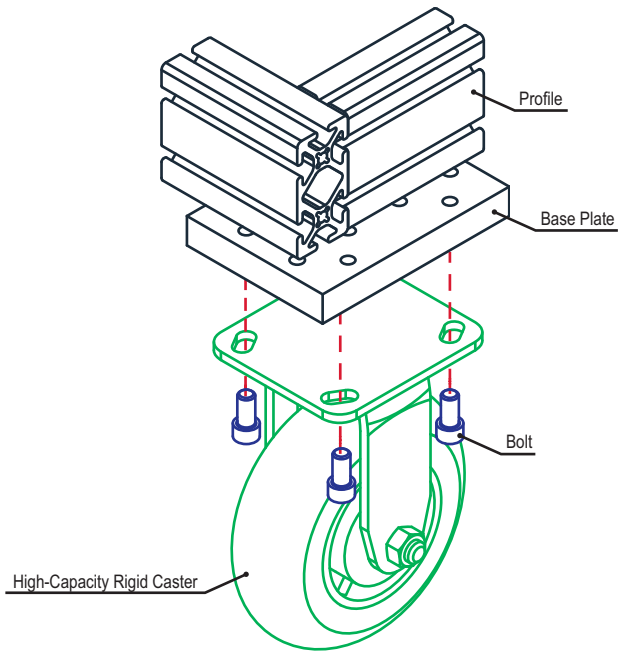

Part Description:

The leveling caster is a foot that incorporates both leveling features and mobility with one component. It is commonly mounted to the end or side of a T-slot profile with a base plate. The leveling caster is available in four sizes. It is ideal for large machine and automation frames. For base plate options see pages 634-635.

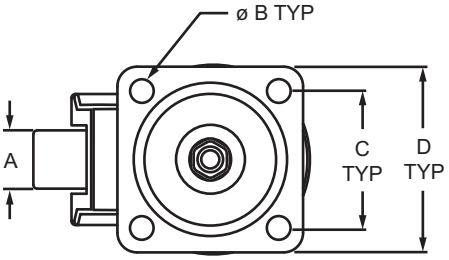

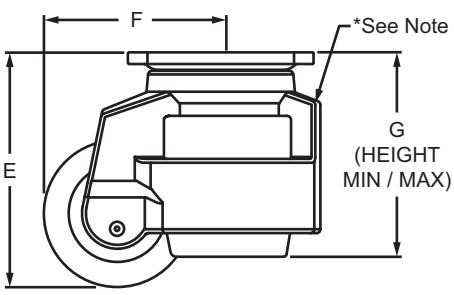

Part No.	Series	A	B	C	D	E	F	G	Load Capacity	Weight
2714	F	.945"	.276"	2.283"	2.874"	3.228"	2.362"	2.700" / 3.650"	550.00 lb	1.620 lb
2715	F	1.142"	.315"	2.756"	3.543"	4.020"	3.051"	3.429" / 4.606"	1100.00 lb	2.943 lb
2716	F	1.193"	.433"	2.756"	3.740"	4.724"	3.563"	4.035" / 5.197"	1650.00 lb	3.950 lb
2717*	F	1.220"	.433"	2.756"	3.740"	4.724"	3.563"	4.250" / 4.875"	2200.00 lb	4.607 lb
65-2714	M	24.00mm	7.00mm	58.00mm	73.00mm	82.00mm	60.00mm	68.70mm / 92.70mm	249.47 kg	.7542 kg
40-2715	M	29.00mm	9.00mm	70.00mm	90.00mm	102.00mm	77.50mm	87.10mm / 117.00mm	498.95 kg	1.3045 kg
40-2716	M	30.30mm	11.00mm	70.00mm	95.00mm	120.00mm	90.50mm	102.50mm / 132.00mm	748.42 kg	1.7917 kg
40-2717*	M	31.00mm	11.00mm	70.00mm	95.00mm	119.90mm	90.50mm	107.95mm / 123.83mm	997.90 kg	2.0403 kg

*Center bar not available

Material Specifications

Material	Finish	Color
Die Cast Aluminum / Plastic Nylon (Nylon 6)	Powder Coat Over Zinc	Black

Suggested Hardware (Mount to Base Plate)

Caster No.	Series	Base Plate	Bolt Kit	Bolt Kit Qty.
2714	F	2406 / 2407	3064	4
2715	F	2408	3112	4
2716	F	2409	3125	4
2717	F	2409	3125	4
65-2714	M	25-2406 / 40-2407	13-6520	4
40-2715	M	40-2408	13-8525	4
40-2716	M	40-2409	13-1520	4
40-2717	M	40-2409	13-1520	4

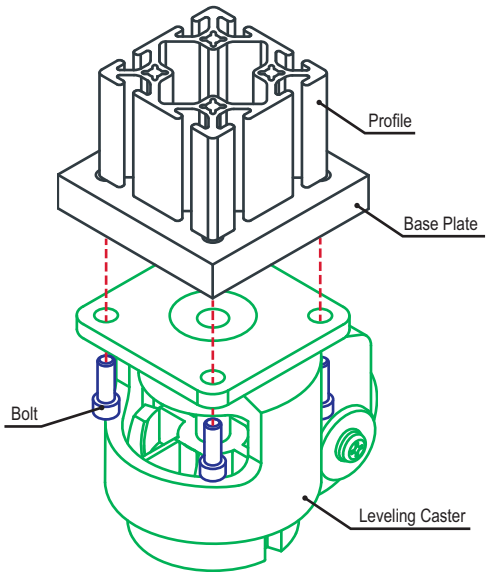

Adjustable Position Floor Lock

Part Description:

The adjustable position floor lock uses a spring-loaded rubber foot pad to immobilize equipment. It is commonly used to keep frames from shifting and has a foot that can adjust up to 2.75" (69.85mm), allowing greater design flexibility. The adjustable position floor lock has a foot release lever and commonly mounts to a T-slot profile side using a position floor lock base plate. There is a minimum weight requirement of 70 pounds (31.75 kg) necessary to properly immobilize equipment. By adjusting the tension nut, the holding force can be increased from 70 pounds (31.75 kg) to 120 pounds (54.43 kg). For base plate options see pages 636-637.

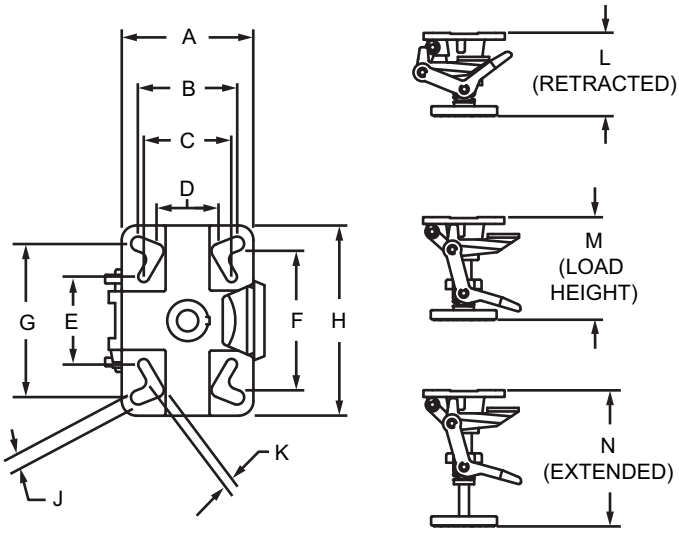

Retracted Extended

Part No.	Series	A	B	C	D	E	F	G	H	J	K	L	M	N	Load Capacity	Weight
2731	F	4.500"	3.400"	3.000"	2.100"	3.000"	4.750"	5.250"	6.500"	.490"	.380"	4.500"	5.500"	7.500"	70-120 lb	7.115 lb
40-2731	M	114.30mm	86.36mm	76.20mm	53.34mm	76.20mm	120.65mm	133.35mm	165.10mm	12.45mm	9.66mm	114.30mm	139.70mm	190.50mm	32-54 kg	3.233 kg

Material Specifications

Material	Finish
Steel Casting	Paint

Suggested Hardware (Mount to Base Plate)

Part No.	Series	Qty.	Bolt
3289	F	4	3/8-16 x 1.00" SHCS & Washer
13-1525	M	4	M10 x 25mm SHCS & Washer

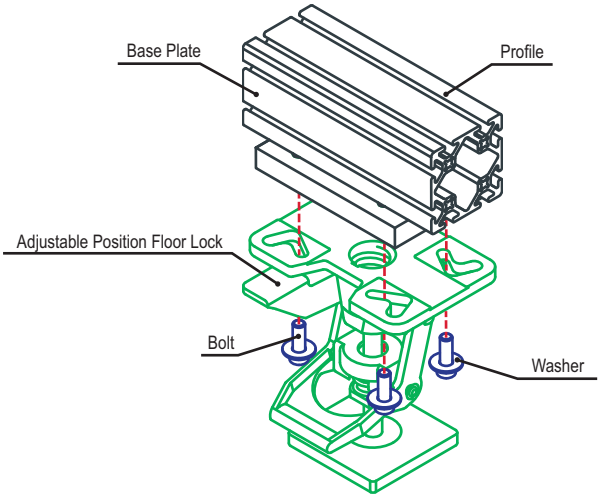

Part Description:

The standard floor glide is made of black nylon and has a 100 pound (45.36 kilogram) load capacity. The non-corrosive threaded stem can mount directly to the T-slot profile end or to the side or end using a base plate. It is a medium-duty foot that works well on carpet or tiled areas, making it ideal for home and office furniture, desks, stands and tables.

2203

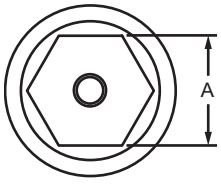

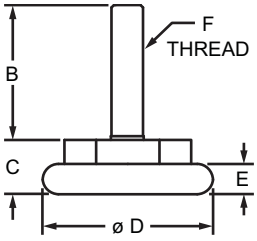

2204

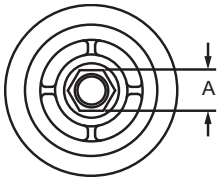

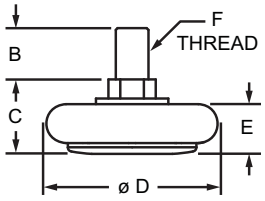

Part No.	Series	Material	Finish	Color	A	B	C	D	E	F	Load Capacity	Weight
2203	F	Steel / Nylon	Zinc	Black	.875"	1.070"	.430"	1.350"	.240"	1/4-20	100.00 lb	.033 lb
2204	F				.470"	.593"	.860"	1.968"	.575"	3/8-16	100.00 lb	.088 lb

Required Machining Services

Machining Type	Machined	Reference Page
Tap Profile End	Mounting Profile	861

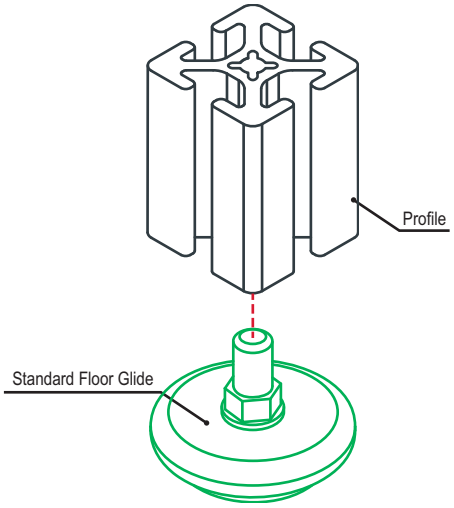

Economy Floor Glide

Part Description:

The economy floor glide is nickel-plated with a non-abrasive nylon base. It can mount directly to the T-slot profile end or to the side or end using a base plate. It is a medium-duty foot with load capacity options ranging from 250-500 pounds (113-227 kilograms). It works well on a variety of surfaces such as concrete or carpet, making it ideal for industrial, office, or home solutions.

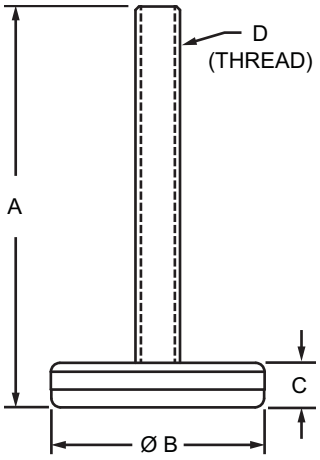

Part No.	Series	Color	A	B	C	D	Load Capacity	Weight
2186	F	Bright / Natural	2.250"	1.200"	.378"	1/4-20	250.00 lb	.042 lb
2187	F		2.840"	2.030"	.460"	5/16-18	250.00 lb	.118 lb
2188	F		3.030"	2.400"	.530"	3/8-16	250.00 lb	.169 lb
2189	F		3.030"	2.800"	.542"	1/2-13	500.00 lb	.258 lb
25-2186	M		57.20mm	31.00mm	9.60mm	M6 x 1.0	113.00 kg	.0188 kg
65-2187	M		57.20mm	52.00mm	11.80mm	M8 x 1.25	113.00 kg	.0501 kg
65-2188	M		75.40mm	61.00mm	13.40mm	M10 x 1.5	113.00 kg	.0806 kg
65-2189	M		77.00mm	72.00mm	13.76mm	M12 x 1.75	227.00 kg	.1142 kg

Material Specifications

Material	Process	Finish
Steel / Nylon	Machined	Nickel

Required Machining Services

Machining Type	Machined	Reference Page
Tap Profile End	Mounting Profile	861

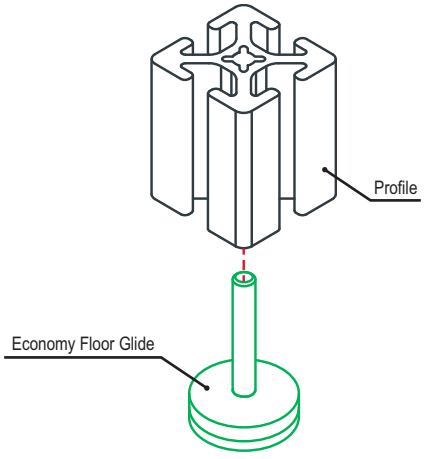

Part Description:

The large base glide is a foot with load capacity options ranging up to 5000 pounds (2175 kilograms). It mounts with a base plate and works well for leveling heavier applications. The large base diameter creates maximum surface area while allowing a 15 degree swivel in all directions, making it perfect for industrial applications. The glide includes punch out mounting holes for anchoring or bolting to the floor, great for guards and machine frames. See more about floor anchors on page 625. For information on base plates see pages 638-643 and 653-654.

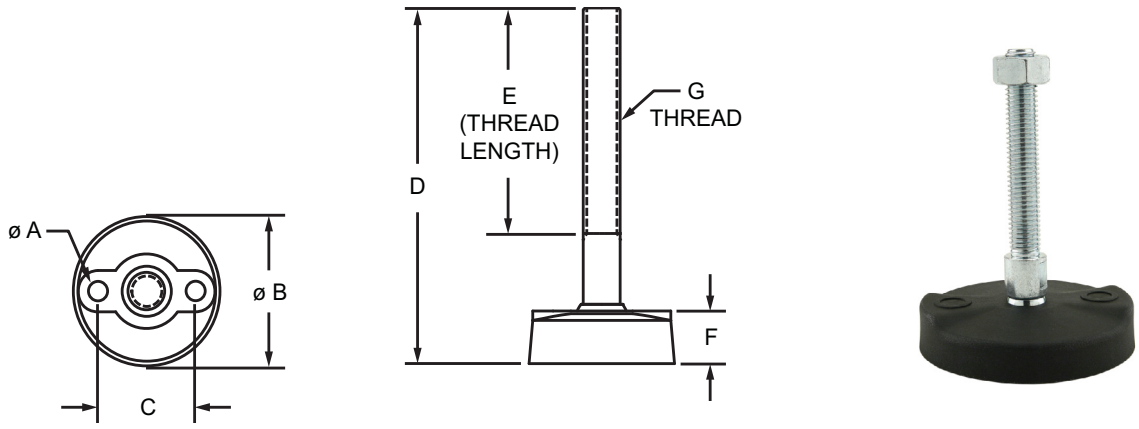

Part No.	Series	A	B	C	D	E	F	G	Load Capacity	Weight
2183	F	.272"	1.970"	1.320"	4.290"	3.000"	.730"	3/8-16	4000.00 lb	.236 lb
2184	F	.272"	1.970"	1.320"	4.290"	3.000"	.730"	1/2-13	4000.00 lb	.316 lb
2181	F	.354"	3.150"	2.165"	4.290"	3.000"	.730"	3/8-16	5000.00 lb	.304 lb
2182	F	.354"	3.150"	2.165"	4.290"	3.000"	.730"	1/2-13	5000.00 lb	.383 lb
65-2183	M	6.50mm	50.80mm	33.30mm	110.00mm	75.00mm	18.00mm	M10 x 1.50	1740.00 kg	.1128 kg
65-2184	M	6.50mm	50.80mm	33.30mm	110.00mm	75.00mm	18.00mm	M12 x 1.75	1740.00 kg	.1245 kg
65-2178	M	6.50mm	50.80mm	33.30mm	135.00mm	100.00mm	18.00mm	M16 x 2.00	1740.00 kg	.2227 kg
65-2181	M	9.00mm	76.20mm	55.00mm	110.00mm	75.00mm	18.00mm	M10 x 1.50	2175.00 kg	.1676 kg
65-2182	M	9.00mm	76.20mm	55.00mm	110.00mm	75.00mm	18.00mm	M12 x 1.75	2175.00 kg	.1626 kg
65-2179	M	9.00mm	76.20mm	55.00mm	135.00mm	100.00mm	18.00mm	M16 x 2.00	2175.00 kg	.2580 kg

Material Specifications

Material	Process	Finish	Color
Steel / Elastomer Rubber	Injection Molded	Zinc / Matte	Bright / Black

Required Machining Services

Machining Type	Machined	Reference Page
Tap Profile End	Mounting Profile	861

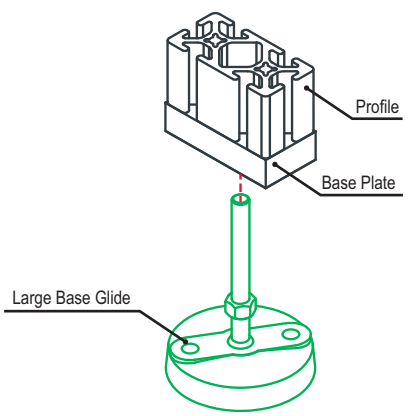

Mighty Mount®

Part Description:

The Mighty Mount® is a foot with a high level of vibration and shock isolation. It has a non-skid elastomer pad with load capacities ranging from 300-4200 pounds and 136-453 kilograms. The Mighty Mount® has a powder coated safety-yellow steel housing and is a heavy-duty option, perfect for industrial applications such as machine framing, automation solutions, and guards. It is recommended for use with leveling anchor base plates (pages 644-647).

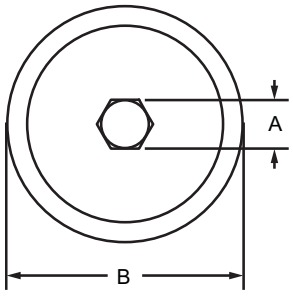

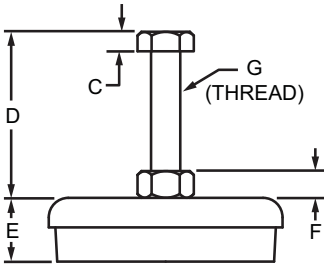

Part No.	Series	A	B	C	D	E	F	G	Load Capacity	Weight
2215	F	.563"	3.000"	.250"	2.250"	1.500"	.375"	3/8-16	300.00 lb	.902 lb
2205	F	.563"	3.000"	.250"	2.250"	1.500"	.375"	3/8-24	300.00 lb	1.038 lb
2216	F	.750"	5.000"	.375"	4.250"	1.500"	.438"	1/2-13	1500.00 lb	2.474 lb
2217	F	1.125"	6.000"	.500"	4.250"	1.630"	.688"	3/4-10	4200.00 lb	5.086 lb
25-2205	M	17.00mm	75.00mm	8.38mm	65.00mm	40.00mm	8.38mm	M10 x 1.50	136.00 kg	.4783 kg
40-2206	M	18.80mm	116.00mm	11.20mm	119.50mm	40.00mm	9.90mm	M12 x 1.75	453.00 kg	1.0700 kg

Material Specifications

Material	Process	Finish	Color
Steel / Elastomer Rubber	Cold Rolled Sheet Coil Steel Formed	Zinc / Powder Coated	Bright / Yellow / Black

Required Machining Services

Machining Type	Machined	Reference Page
Tap Profile End	Mounting Profile	861

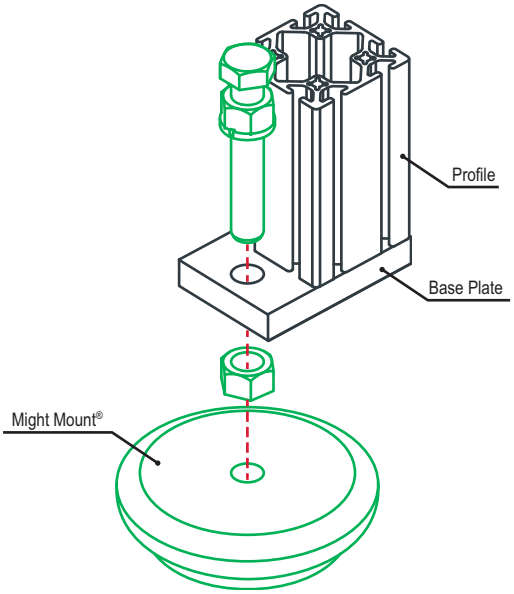

Part Description:

The economy anti-vibration mount is a foot that pivots 20 degrees to accommodate uneven floors. It has a rubber pad to provide resistance to vibration, making it useful for high-precision projects or computerized machinery. There are options available with load capacities ranging from 200-1250 pounds and 23-148 kilograms. For information on base plates see pages 638-643 and 653-654. **Additional Information:** The economy anti-vibration mount comes with a jam nut.

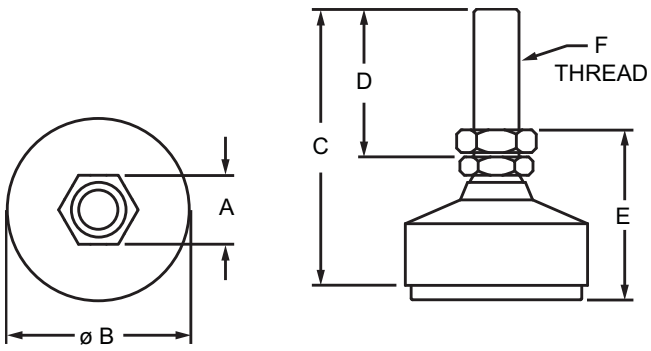

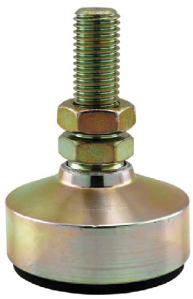

Part No.	Series	Color	A	B	C	D	E	F	Load Capacity	Weight
2207	F	Yellow	.562"	1.250"	3.500"	2.000"	1.500"	3/8-16	200.00 lb	.346 lb
2208	F		.625"	1.875"	3.750"	2.000"	1.750"	1/2-13	500.00 lb	.816 lb
2209	F		1.062"	3.000"	4.125"	2.000"	2.125"	3/4-10	1250.00 lb	2.407 lb
65-2207	M		16.00mm	32.00mm	89.00mm	51.00mm	48.00mm	M10 x 1.50	23.00 kg	.1711 kg
65-2208	M		19.00mm	48.00mm	95.00mm	51.00mm	53.00mm	M12 x 1.75	54.00 kg	.3574 kg
65-2215	M		22.00mm	64.00mm	99.00mm	51.00mm	58.00mm	M16 x 2.00	100.00 kg	.6950 kg
65-2209	M		27.00mm	76.00mm	105.00mm	51.00mm	68.00mm	M20 x 2.50	148.00 kg	1.0991 kg

Material Specifications

Material	Grade	Process	Finish
Steel	12L14	Machined	Zinc

Required Machining Services

Machining Type	Machined	Reference Page
Tap Profile End	Mounting Profile	861

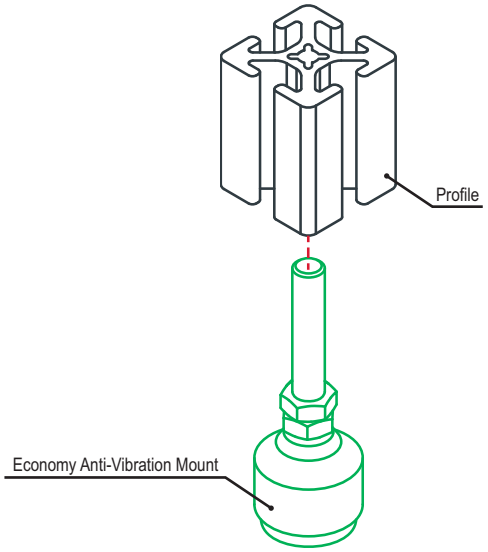

Deluxe Leveling Foot

Part Description:

The deluxe leveling foot has a jam nut that allows it to pivot 20 degrees to accommodate uneven floors. There are options available with load capacities ranging from 1000-7400 pounds and 317-3357 kilograms. The deluxe leveling foot is a heavy-duty option ideal for large structures. For information on base plates see pages 638-643 and 653-654.

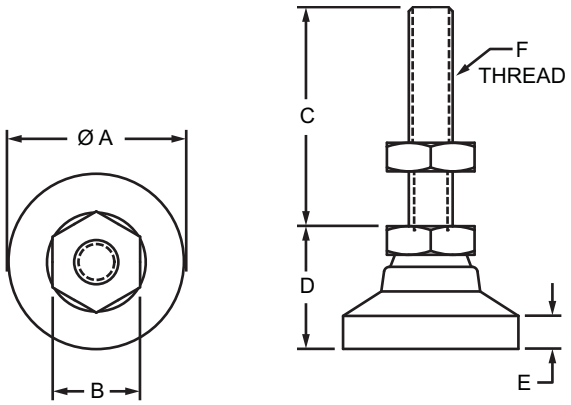

Part No.	Series	Color	A	B	C	D	E	F	Load Capacity	Weight
2192	F	Yellow	1.000"	.500"	1.250"	.703"	.156"	1/4-20	1000.00 lb	.1042 lb
2194	F		1.250"	.625"	2.000"	.875"	.188"	5/16-18	2300.00 lb	.1966 lb
2190	F		1.250"	.625"	2.000"	.875"	.188"	3/8-16	3750.00 lb	.2160 lb
2200	F		1.875"	.750"	2.000"	1.125"	.250"	1/2-13	5000.00 lb	.4940 lb
2202	F		3.000"	1.062"	2.000"	1.500"	.500"	3/4-10	7400.00 lb	1.6930 lb
25-2192	M		19.00mm	10.00mm	25.00mm	14.00mm	2.50mm	M6 x 1.00	317.00 kg	.0213 kg
65-2212	M		26.00mm	13.00mm	32.00mm	18.00mm	3.50mm	M8 x 1.25	453.00 kg	.0487 kg
65-2190	M		32.00mm	16.00mm	51.00mm	22.00mm	4.00mm	M10 x 1.50	1701.00 kg	.1049 kg
65-2200	M		48.00mm	19.00mm	51.00mm	29.00mm	5.50mm	M12 x 1.75	2268.00 kg	.2183 kg
65-2213	M		64.00mm	22.00mm	51.00mm	32.00mm	8.00mm	M16 x 2.00	2721.00 kg	.4490 kg
65-2202	M		76.00mm	27.00mm	51.00mm	38.00mm	10.00mm	M20 x 2.50	3357.00 kg	.7580 kg

Material Specifications

Material	Grade	Process	Finish
Steel	12L14	Machined	Zinc

Required Machining Services

Machining Type	Machined	Reference Page
Tap Profile End	Mounting Profile	861

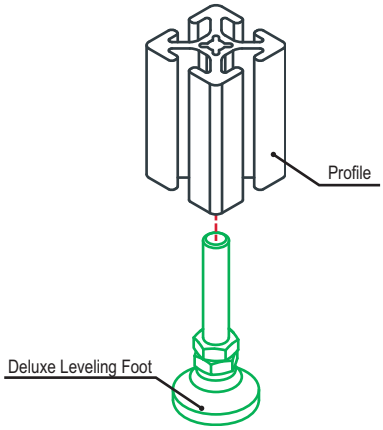

Part Description:

The economy leveling foot includes a jam nut to accommodate uneven floors. It is a cost-effective option ideal for heavy-duty projects. There are options available with load capacities ranging from 1050-4700 pounds (475-2130 kilograms). The economy leveling foot can be mounted directly to a profile end or to the side or end with a base plate (pages 638-643 and 653-654). For tapping services see page 861.

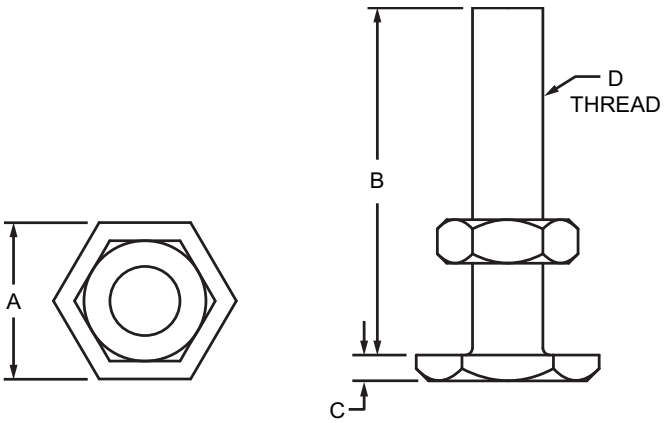

Part No.	Series	Material	Grade	Process	Finish	Color	A	B	C	D	Load Capacity	Weight
2193	F	Steel	C1010	Cold Formed	Zinc	Black	.563"	1.250"	.094"	1/4-20	1050.00 lb	.025 lb
2195	F						.750"	1.500"	.109"	5/16-18	1750.00 lb	.046 lb
2191	F						.875"	2.000"	.141"	3/8-16	2550.00 lb	.082 lb
2201	F						1.063"	2.500"	.172"	1/2-13	4700.00 lb	.180 lb
25-2193	M					Bright	14.00mm	30.00mm	2.40mm	M6 x 1.00	475.00 kg	.0089 kg
65-2195	M						18.00mm	40.00mm	3.10mm	M8 x 1.25	790.00 kg	.0213 kg
65-2191	M						22.00mm	60.00mm	3.70mm	M10 x 1.50	1150.00 kg	.0471 kg
65-2201	M						25.00mm	63.00mm	4.40mm	M12 x 1.75	2130.00 kg	.0721kg

Required Machining Services

Machining Type	Machined	Reference Page
Tap Profile End	Mounting Profile	861

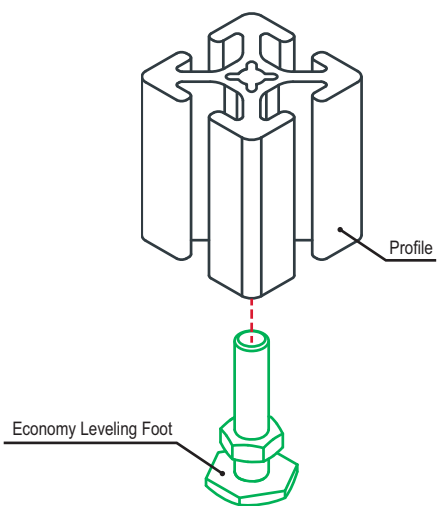

Swivel Foot Base

Part Description:

The swivel foot base is made of stainless steel. It is a heavy-duty leveling foot with a rubber pad that provides resistance to vibration, making it useful for precision applications. There are load capacity options available ranging from 4400-8800 pounds (1995.80-3991.61 kilograms). The swivel foot base requires a threaded stem; see pages 620-621.

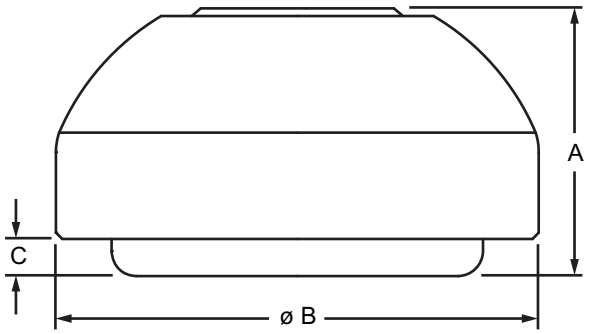

Part No.	Series	Material	Process	Finish	Color	A	B	C	Load Capacity	Weight
12170	F M	Stainless-Steel / Thermoplastic Elastomer	Metal Injection Molded	Stainless	Satin / Black	20.00mm	29.00mm	2.00mm	1995.80 kg	.0670 kg
12172	F M					20.00mm	39.00mm	2.00mm	2993.71 kg	.1092 kg
12174	F M					20.00mm	44.00mm	2.00mm	2993.71 kg	.1300 kg
12176	F M					20.00mm	49.00mm	2.00mm	3492.66 kg	.1680 kg
12178	F M					20.00mm	59.00mm	2.00mm	3492.66 kg	.2324 kg
12182	F M					20.00mm	79.00mm	2.00mm	3991.61 kg	.4065 kg
12186	F M					20.00mm	99.00mm	2.00mm	3991.61 kg	.6451 kg

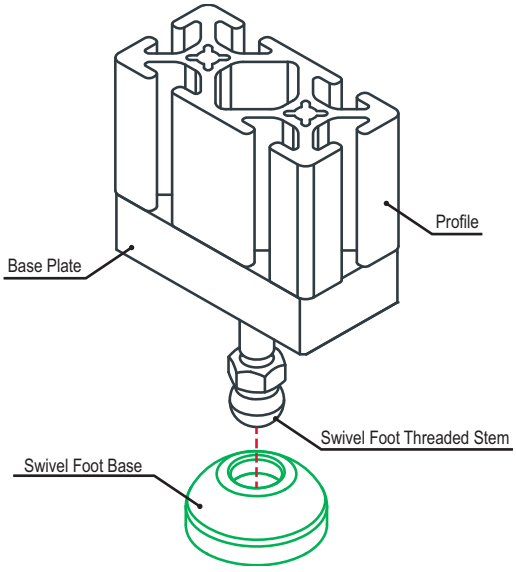

Part Description:

The swivel foot base with mount holes is made of stainless steel. It is a heavy-duty leveling foot with a rubber pad that provides resistance to vibration, making it useful for precision applications. There are options available with load capacities ranging from 6600-8800 pounds (2993.71-3991.61 kilograms). The holes enable mounting of the fixture directly to a concrete floor. See page 625 for information on floor anchors. It requires a threaded stem; see pages 620-621.

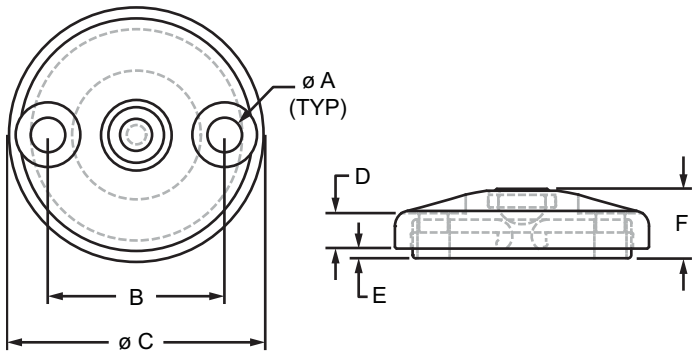

Part No.	Series	A	B	C	D	E	F	Load Capacity	Weight
12181	F M	9.00mm	55.00mm	79.00mm	11.00mm	2.00mm	20.00mm	2993.71 kg	.3865 kg
12185	F M	9.00mm	74.00mm	99.00mm	11.00mm	2.00mm	20.00mm	3991.61 kg	.6238 kg

Material Specifications

Material	Process	Finish	Color
Stainless-Steel / Thermoplastic Elastomer	Metal Injection Molded	Stainless	Satin / Black

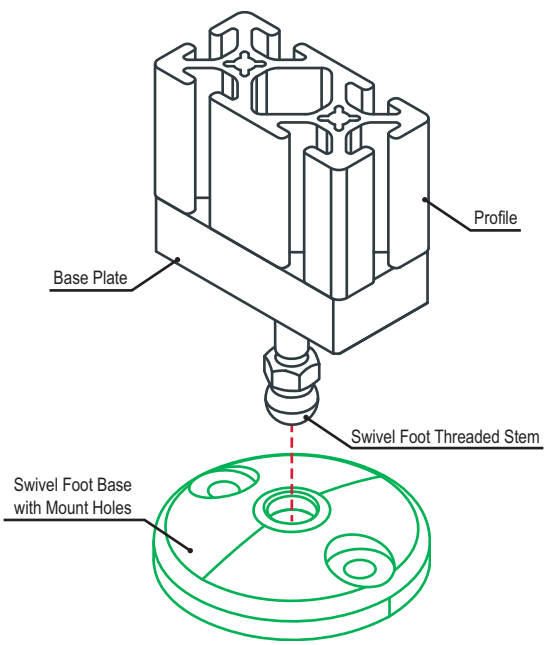

Swivel Foot Threaded Stem

Part Description:

The swivel foot threaded stem is used with swivel bases and is available in zinc-plated or stainless steel. There are options for medium or heavy-duty applications.

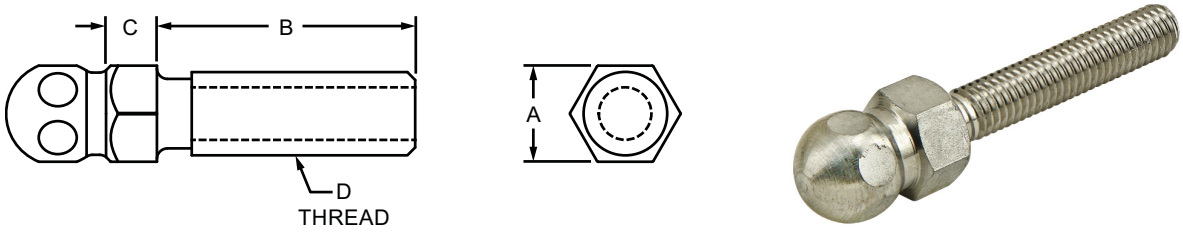

Part No.	Series	Material	Grade	Process	Finish	Color	A	B	C	D	Load Capacity	Weight
12211	F	Steel	5.8		Zinc	Bright	.551"	—	.295"	1/4-20	400.00 lb	.047 lb
12229	F	Stainless-Steel	304		Stainless	Natural	9/16	1.500"	.295"	1/4-20	400.00 lb	.069 lb
12230	F	Steel	5.8		Zinc	Bright	9/16	1.500"	.295"	1/4-20	400.00 lb	.070 lb
12245	F	Stainless-Steel	304		Stainless	Natural	9/16	1.500"	.295"	5/16-18	700.00 lb	.081 lb
12246	F	Steel	5.8		Zinc	Bright	9/16	1.500"	.295"	5/16-18	700.00 lb	.078 lb
12247	F	Stainless-Steel	304		Stainless	Natural	9/16	2.500"	.295"	5/16-18	700.00 lb	.094 lb
12248	F	Steel	5.8		Zinc	Bright	9/16	2.500"	.295"	5/16-18	700.00 lb	.093 lb
12249	F	Stainless-Steel	304		Stainless	Natural	9/16	3.500"	.295"	5/16-18	700.00 lb	.111 lb
12250	F	Steel	5.8		Zinc	Bright	9/16	3.500"	.295"	5/16-18	700.00 lb	.120 lb
12237	F	Stainless-Steel	304		Stainless	Natural	9/16	1.500"	.295"	3/8-16	1000.00 lb	.092 lb
12238	F	Steel	5.8		Zinc	Bright	9/16	1.500"	.295"	3/8-16	1000.00 lb	.090 lb
12239	F	Stainless-Steel	304	Machined	Stainless	Natural	9/16	2.500"	.295"	3/8-16	1000.00 lb	.113 lb
12240	F	Steel	5.8		Zinc	Bright	9/16	2.500"	.295"	3/8-16	1000.00 lb	.112 lb
12241	F	Stainless-Steel	304		Stainless	Natural	9/16	4.000"	.295"	3/8-16	1000.00 lb	.154 lb
12242	F	Steel	5.8		Zinc	Bright	9/16	4.000"	.295"	3/8-16	1000.00 lb	.147 lb
12243	F	Stainless-Steel	304		Stainless	Natural	9/16	6.000"	.295"	3/8-16	1000.00 lb	.200 lb
12213	F	Stainless-Steel	304		Stainless	Natural	9/16	1.500"	.295"	1/2-13	1600.00 lb	.112 lb
12215	F	Stainless-Steel	304		Stainless	Natural	9/16	2.500"	.295"	1/2-13	1600.00 lb	.162 lb
12216	F	Steel	5.8		Zinc	Bright	9/16	2.500"	.295"	1/2-13	1600.00 lb	.162 lb
12217	F	Stainless-Steel	304		Stainless	Natural	9/16	2.000"	.295"	1/2-13	1600.00 lb	.140 lb
12218	F	Steel	5.8		Zinc	Bright	9/16	2.000"	.295"	1/2-13	1600.00 lb	.143 lb
12221	F	Stainless-Steel	304		Stainless	Natural	9/16	3.000"	.295"	1/2-13	1600.00 lb	.188 lb
12222	F	Steel	5.8		Zinc	Bright	9/16	3.000"	.295"	1/2-13	1600.00 lb	.179 lb

CONTINUE

Part No.	Series	Material	Grade	Process	Finish	Color	A	B	C	D	Load Capacity	Weight
12223	F	Stainless-Steel	304	Machined	Stainless	Natural	9/16	4.000"	.295"	1/2-13	1600.00 lb	.234 lb
12224	F	Steel	5.8		Zinc	Bright	9/16	4.000"	.295"	1/2-13	1600.00 lb	.229 lb
12227	F	Stainless-Steel	304		Stainless	Natural	9/16	6.000"	.295"	1/2-13	1600.00 lb	.312 lb
12228	F	Steel	5.8		Zinc	Bright	9/16	6.000"	.295"	1/2-13	1600.00 lb	.322 lb
12231	F	Stainless-Steel	304		Stainless	Natural	7/8	4.000"	.413"	3/4-10	5300.00 lb	.518 lb
12232	F	Steel	5.8		Zinc	Bright	7/8	4.000"	.413"	3/4-10	5300.00 lb	.508 lb
12233	F	Stainless-Steel	304		Stainless	Natural	7/8	6.000"	.413"	3/4-10	5300.00 lb	.731 lb
12234	F	Steel	5.8		Zinc	Bright	7/8	6.000"	.413"	3/4-10	5300.00 lb	.723 lb
12195	M	Stainless-Steel	304		Stainless	Natural	14.00mm	40.00mm	7.50mm	M8 x 1.25	318.00 kg	.0363 kg
12390	M	Steel	5.8		Zinc	Bright	14.00mm	40.00mm	7.50mm	M8 x 1.25	318.00 kg	.0358 kg
12392	M	Steel	5.8		Zinc	Bright	14.00mm	80.00mm	7.50mm	M8 x 1.25	318.00 kg	.0484 kg
12197	M	Stainless-Steel	304		Stainless	Natural	14.00mm	45.00mm	7.50mm	M10 x 1.50	454.00 kg	.0459 kg
12394	M	Steel	5.8		Zinc	Bright	14.00mm	45.00mm	7.50mm	M10 x 1.50	454.00 kg	.0456 kg
12198	M	Stainless-Steel	304		Stainless	Natural	14.00mm	90.00mm	7.50mm	M10 x 1.50	454.00 kg	.0671 kg
12396	M	Steel	5.8		Zinc	Bright	14.00mm	90.00mm	7.50mm	M10 x 1.50	454.00 kg	.0680 kg
12200	M	Stainless-Steel	304		Stainless	Natural	14.00mm	45.00mm	7.50mm	M12 x 1.75	726.00 kg	.0563 kg
12400	M	Steel	5.8		Zinc	Bright	14.00mm	45.00mm	7.50mm	M12 x 1.75	726.00 kg	.0555 kg
12201	M	Stainless-Steel	304		Stainless	Natural	14.00mm	100.00mm	7.50mm	M12 x 1.75	726.00 kg	.0963 kg
12402	M	Steel	5.8		Zinc	Bright	14.00mm	100.00mm	7.50mm	M12 x 1.75	726.00 kg	.0953 kg
12203	M	Stainless-Steel	304		Stainless	Natural	17.00mm	66.00mm	7.50mm	M16 x 2.00	1406.00 kg	.1133 kg
12204	M	Stainless-Steel	304		Stainless	Natural	17.00mm	125.00mm	7.50mm	M16 x 2.00	1406.00 kg	.1919 kg
12408	M	Steel	5.8		Zinc	Bright	17.00mm	125.00mm	7.50mm	M16 x 2.00	1406.00 kg	.1883 kg

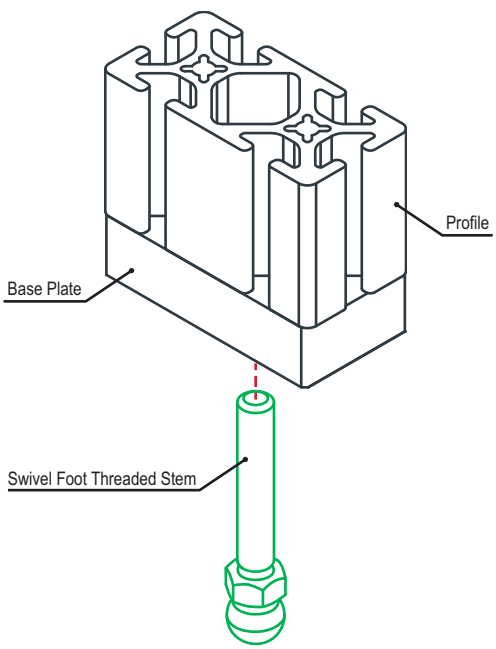

Swivel Foot Extended Base

Part Description:

The swivel foot extended base is a heavy-duty leveling foot with a powder coat which provides extra durability. The extension includes a through-hole to secure directly to a solid concrete floor with a wedge floor anchor (page 625). This base requires a swivel foot threaded stem (page 620-621).

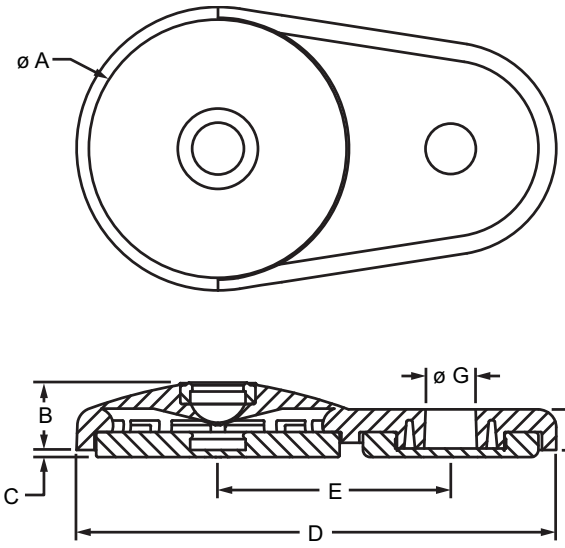

Part No.	Series	Color	A	B	C	D	E	F	G	Load Capacity	Weight
12192	F M	Black	3.110"	.709"	.079"	5.275"	2.559"	.445"	.551"	6600.00 lb	.969 lb

Material Specifications

Material	Process	Finish
Die Cast Zinc	Die-Casting	Black Powder Coated

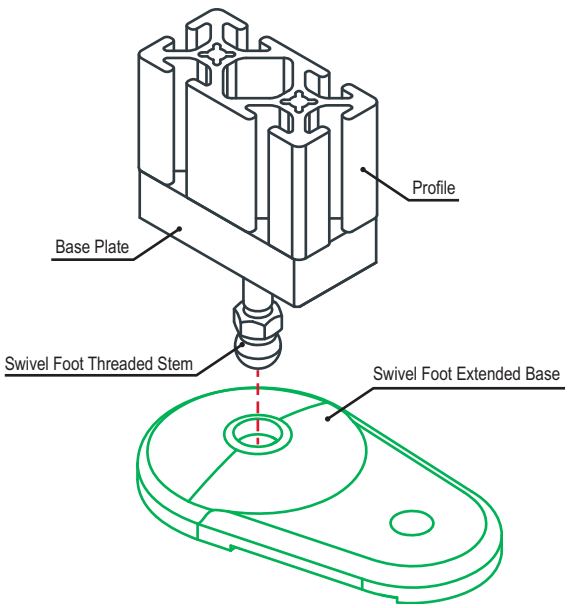

Part Description:

The swivel foot trapezoid base is a heavy-duty leveling foot with a rubber pad that provides resistance to vibration, making it useful for precision applications. It has a powder coat which provides extra durability. The swivel foot trapezoid base requires a threaded stem; see pages 620-621.

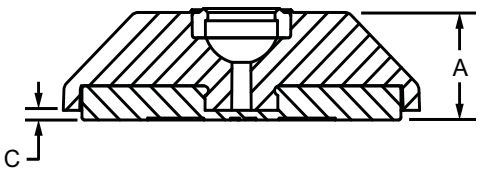

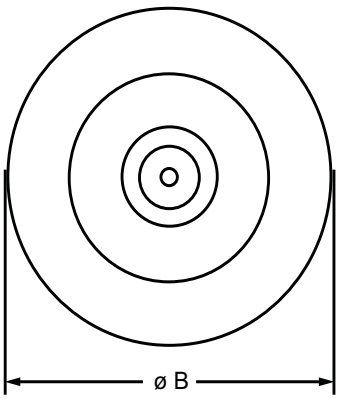

Part No.	Series	Material	Process	Finish	A	B	C	Load Capacity	Weight
12194	F M	Die Cast Zinc	Die-Casting	Black Powder Coated	.866"	2.992"	.079"	6600.00 lb	.480 lb

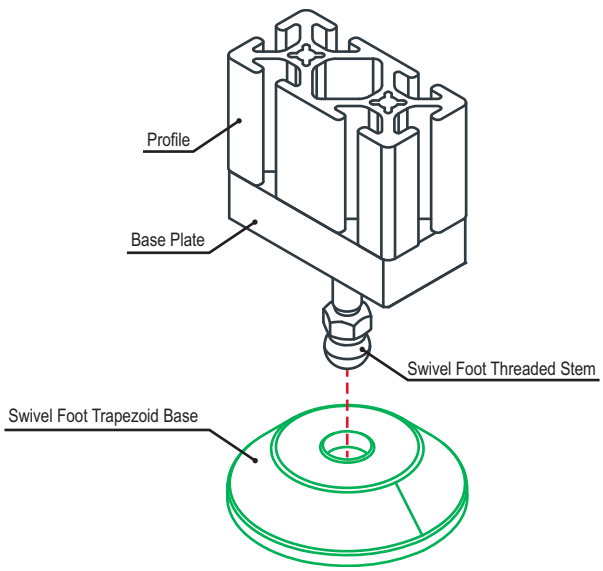

Trapezoid Base Anchor

Part Description:

The trapezoid base anchor is used with the swivel foot trapezoid base (page 623) to securely hold an application in place when used with wedge floor anchors (page 625). It is commonly used when adding to a preexisting build or in instances where the application will need to be moved, for example, when maintenance will be required. It enables repositioning without having to detach the anchor.

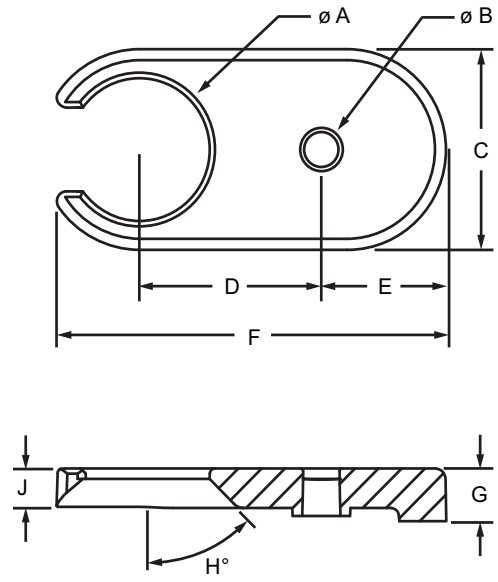

Part No.	Series	A	B	C	D	E	F	G	H	J	Weight
12168	F M	2.126"	.551"	2.992"	2.756"	1.890"	5.905"	.787"	45°	.590"	1.080 lb

Material Specifications

Material	Process	Finish
Die Cast Zinc	Die-Casting	Black Powder Coated

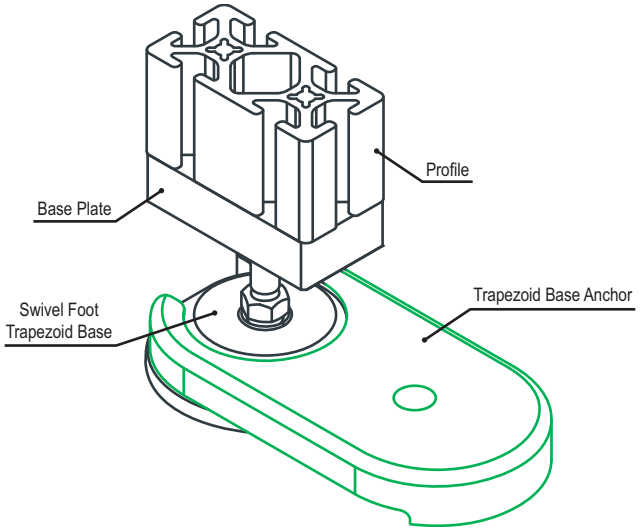

Part Description:

The wedge floor anchor is commonly used with floor to frame options to mount fixtures directly to a solid concrete floor. It's made of high-strength carbon steel for increased durability and longevity and includes a hex nut and washer.

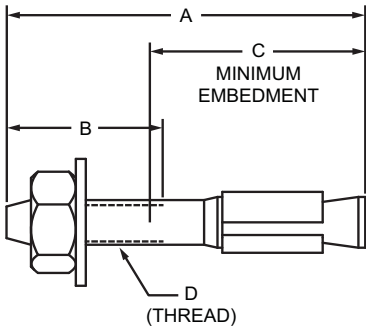

Part No.	Series	Material	Finish	A	B	C	D	Tension	Shear	Weight
2904	F	Steel	Zinc	1.750"	.750"	1.125"	1/4-20	1771.00 lb	1813.00 lb	.033 lb
2905	F			3.250"	2.250"	1.125"	1/4-20	2748.00 lb	2813.00 lb	.049 lb
2901	F			2.750"	1.315"	1.500"	3/8-16	3219.00 lb	4029.00 lb	.095 lb
2902	F			3.750"	2.315"	1.500"	3/8-16	5678.00 lb	4305.00 lb	.121 lb
2903	F			5.000"	3.565"	1.500"	3/8-16	5935.00 lb	4581.00 lb	.153 lb
2906	F			3.750"	1.837"	2.250"	1/2-13	5384.00 lb	6900.00 lb	.229 lb
2907	F			5.500"	3.587"	2.250"	1/2-13	7333.00 lb	7449.00 lb	.307 lb
2908	F			7.000"	5.087"	2.250"	1/2-13	9003.00 lb	7998.00 lb	.371 lb
65-2904	M			44.45mm	19.05mm	28.57mm	1/4-20	803.30 kg	822.35 kg	.0150 kg
65-2905	M			82.55mm	57.15mm	28.57mm	1/4-20	1246.50 kg	1275.95 kg	.0223 kg
65-2901	M			69.85mm	33.40mm	38.10mm	3/8-16	1460.10 kg	1827.50 kg	.0425 kg
65-2902	M			95.25mm	58.80mm	38.10mm	3/8-16	2575.50 kg	1952.70 kg	.0535 kg
65-2903	M			127.00mm	90.55mm	38.10mm	3/8-16	2692.00 kg	2077.90 kg	.0714 kg
65-2906	M			95.25mm	46.67mm	57.16mm	1/2-13	2442.15 kg	3129.80 kg	.1030 kg
65-2907	M			139.70mm	91.10mm	57.16mm	1/2-13	3326.20 kg	3378.80 kg	.1405 kg
65-2908	M			177.80mm	129.22mm	57.16mm	1/2-13	4083.70 kg	3627.85 kg	.1696 kg

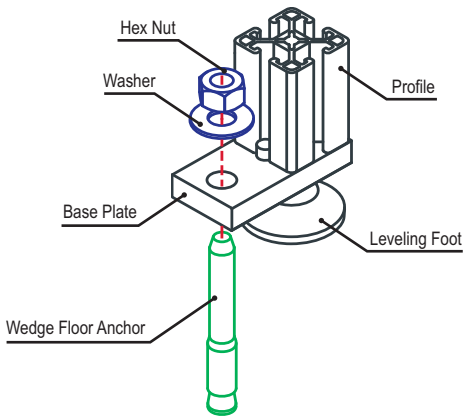

Die-Cast Floor Bracket

Part Description:

The die-cast floor bracket is used with wedge floor anchors (page 625) to secure a fixture directly to a solid concrete floor. It has a black powder-coat finish that helps add durability. The die-cast floor bracket mounts directly to a T-slot profile.

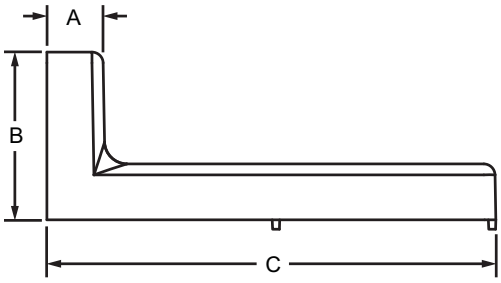

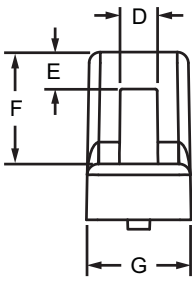

Part No.	Series	Material	Process	Finish	Color	A	B	C	D	E	F	G	Weight
14000	10 25	Die Cast Zinc	Die-Casting	Powder Coated	Black	15.20mm	45.30mm	120.80mm	10.10mm	10.10mm	30.20mm	28.20mm	.1927 kg
14002	15 30 40					15.20mm	45.30mm	120.80mm	10.10mm	10.10mm	30.20mm	28.20mm	.1932 kg
14006	15 40		Formed	Black		20.00mm	60.00mm	160.00mm	11.10mm	8.00mm	40.00mm	40.00mm	.2123 kg
14004	45		Die-Casting	Powder Coated		15.20mm	45.30mm	120.80mm	10.10mm	10.10mm	30.20mm	28.20mm	.1889 kg
14008	45					20.00mm	60.00mm	160.00mm	10.30mm	8.60mm	40.00mm	38.00mm	.4610 kg

Suggested Hardware (Mount to T-Slot)

Part No.	Bolt Assy.	Series	Qty.	Bolt	T-Nut
14000	3486	10	2	1/4-20 x 3/8 SHCS	Economy
14002	3493	15	2	1/4-20 x 5/8 SHCS	Economy
14006	3454	15	2	5/16-18 x 5/8 SHCS	Economy
14000	75-3520	25	2	M6 x 10mm SHCS	Economy
14002	75-3590	30	2	M6 x 10mm SHCS	Drop-In
14002	75-3593	40	2	M6 x 14mm SHCS	Drop-In
14006	75-3625	40	2	M8 x 16mm SHCS	Slide-In
14004	75-3594	45	2	M6 x 14mm SHCS	Drop-In
14008	75-3623	45	2	M8 x 16mm SHCS	Drop-In

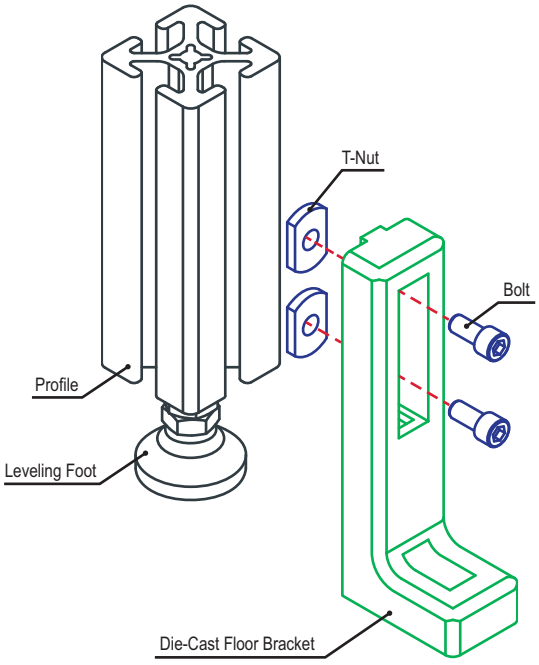

Part Description:

The adjustable die-cast floor bracket is used with wedge floor anchors (page 625) to secure a fixture directly to a solid concrete floor. It has a black powder-coat finish that helps add durability. The bracket includes a screw and stop plate that enables it to be adjusted up and down without having to lift the entire fixture. The adjustable die-cast floor bracket mounts directly to a T-slot profile.

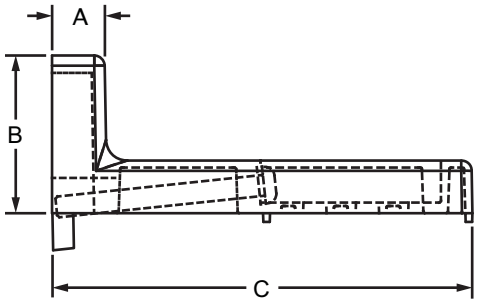

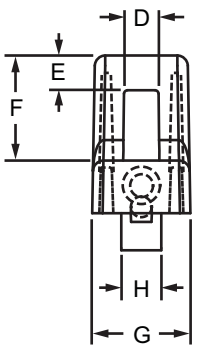

Part No.	Series	A	B	C	D	E	F	G	H	Lifting Height	Weight
14001	10 25	15.20mm	45.30mm	120.80mm	10.10mm	10.10mm	30.20mm	28.20mm	11.50mm	52.00mm	.2141 kg
14003	15 30 40	15.20mm	45.30mm	120.80mm	10.10mm	10.10mm	30.20mm	28.20mm	11.50mm	52.00mm	.2122 kg
14007	15 40	20.00mm	60.00mm	160.00mm	10.30mm	8.60mm	40.00mm	38.00mm	15.00mm	72.00mm	.5175 kg
14005	45	15.20mm	45.30mm	120.80mm	10.10mm	10.10mm	30.20mm	28.20mm	11.50mm	52.00mm	.2155 kg
14009	45	20.00mm	60.00mm	160.00mm	10.30mm	8.60mm	40.00mm	38.00mm	15.00mm	72.00mm	.5224 kg

Material Specifications

Material	Process	Finish	Color
Die Cast Zinc	Die-Casting	Powder Coated	Black

Suggested Hardware (Mount to T-Slot)

Part No.	Bolt Assy.	Series	Qty.	Bolt	T-Nut
14001	3486	10	2	1/4-20 x 3/8 SHCS	Economy
14003	3493	15	2	1/4-20 x 5/8 SHCS	Economy
14007	3454	15	2	5/16-18 x 5/8 SHCS	Economy
14001	75-3520	25	2	M6 x 10mm SHCS	Economy
14003	75-3590	30	2	M6 x 10mm SHCS	Drop-In
14003	75-3593	40	2	M6 x 14mm SHCS	Drop-In
14007	75-3625	40	2	M8 x 16mm SHCS	Slide-In
14005	75-3594	45	2	M6 x 14mm SHCS	Drop-In
14009	75-3623	45	2	M8 x 16mm SHCS	Drop-In

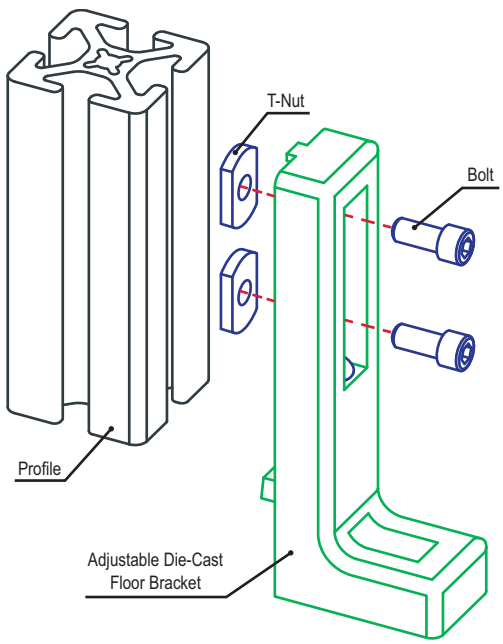

Steel Floor Bracket

Part Description:

The steel floor bracket is zinc-plated and attaches directly to a T-slot profile with the suggested hardware (see chart below). Use wedge anchors (pages 625) to mount the bracket directly to a concrete floor. The design of the steel floor bracket is compact, making it perfect in tight or smaller locations.

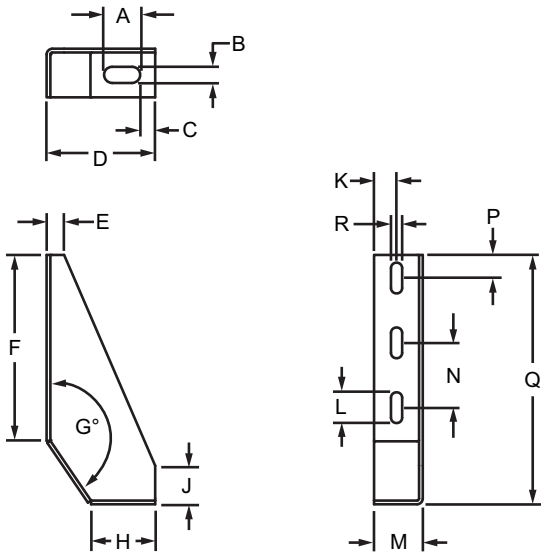

Part No.	Series	A	B	C	D	E	F	G	H	J	K	L	M	N	P	Q	R	Weight
14010	15 40 45	29.00mm	13.00mm	12.00mm	87.00mm	14.00mm	150.00mm	145.78°	53.00mm	31.00mm	19.50mm	25.00mm	39.00mm	52.00mm	18.50mm	200.00mm	9.00mm	.4273 kg

Material Specifications

Material	Process	Finish	Color
Steel	Die-Casting	Zinc	Bright

Suggested Hardware (Mount to T-Slot)

Part No.	Series	Qty.	Bolt	T-Nut
3450	15	3	5/16-18 x 1/2 SHCS	Economy
75-3624	40	3	M8 x 12mm SHCS	Slide-In
75-3623	45	3	M8 x 16mm SHCS	Drop-In

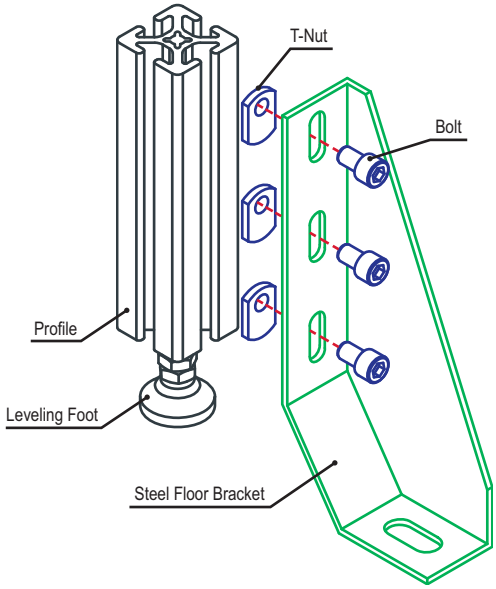

Part Description:

The aluminum floor bracket is a strong, die-cast option that attaches directly to a 45-series profile with the suggested hardware (see chart). The slot tab enables easy alignment. This bracket is commonly used with wedge anchors (page 625) to mount directly to a concrete floor.

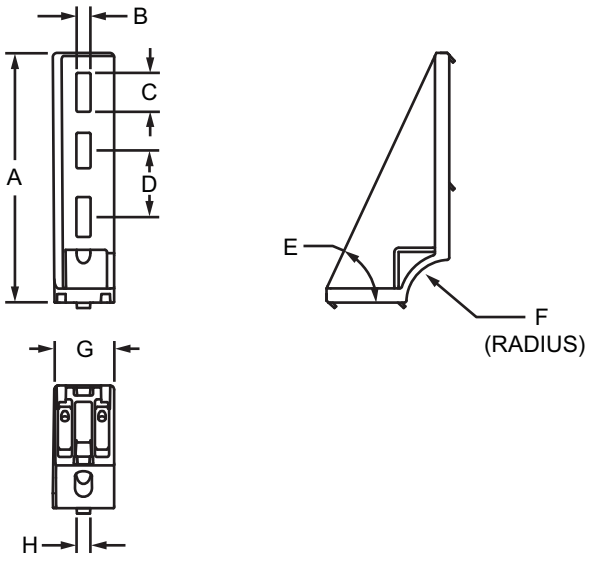

Part No.	Series	A	B	C	D	E	F	G	H	Weight
12028	45	175.00mm	10.00mm	25.00mm	45.00mm	65°	30.00mm	43.00mm	10.00mm	.2600 kg

Material Specifications

Material	Process	Finish
Aluminum	Die-Casting	Natural

Suggested Hardware (Mount to T-Slot)

Part No.	Series	Qty.	Bolt	T-Nut
75-3630	45	2	M8 x 20mm SHCS	Drop-In

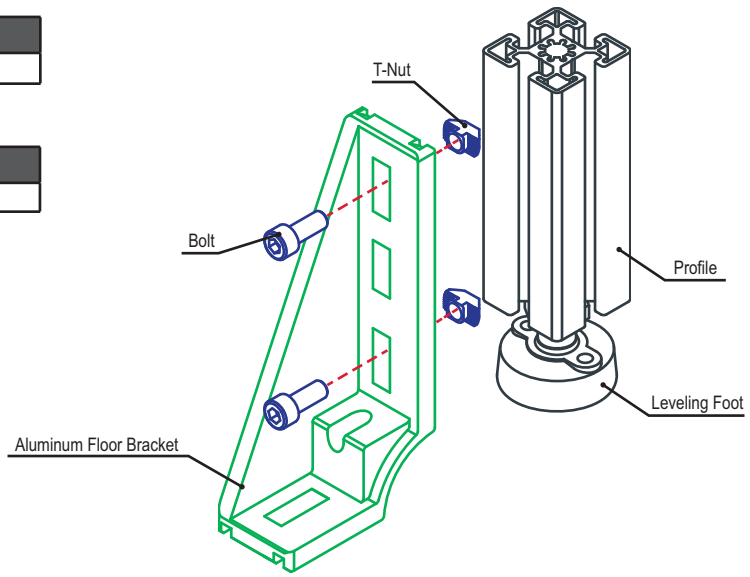

Threaded End Bracket

Part Description:

The threaded end bracket is made of steel and is used to add a leveling foot to a Quick Frame profile.

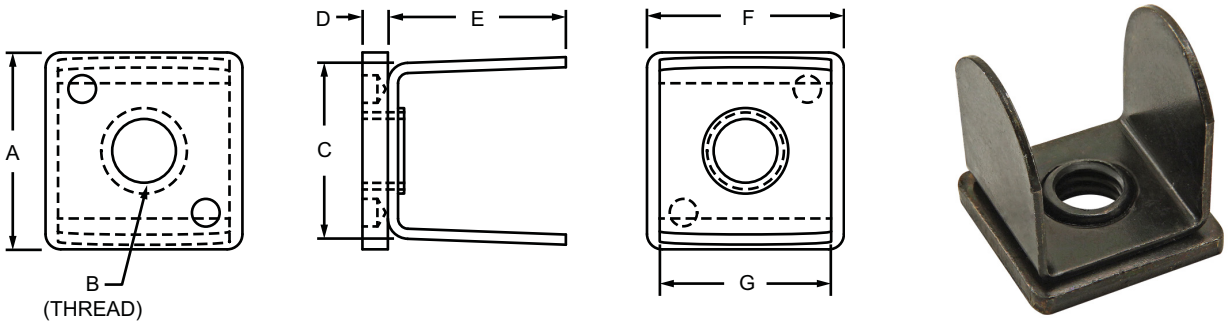

Part No.	Series	A	B	C	D	E	F	G	Weight
9350	QF	.968"	5/16-18	.865"	.125"	.875"	.968"	.843"	.055 lb
9351	QF	.968"	3/8-16	.865"	.125"	.875"	.968"	.843"	.054 lb

Material Specifications

Material	Grade	Process	Finish
Steel	C1010	Stamping	Plain

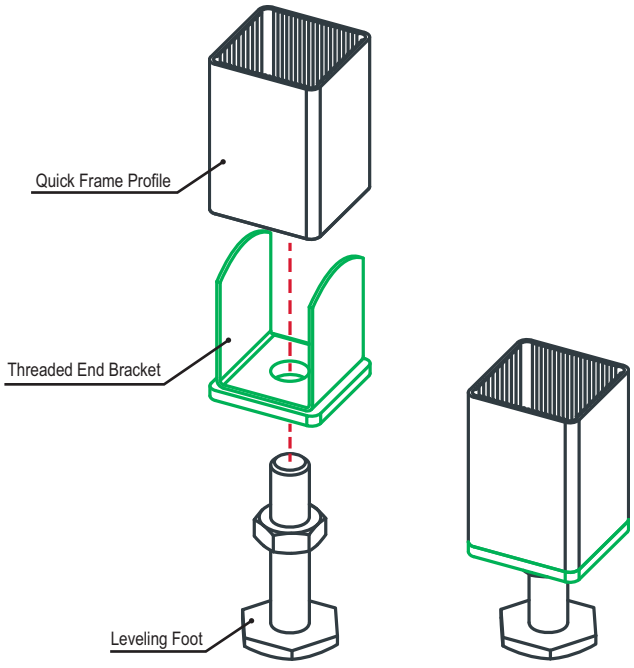

Part Description:

The flange mount caster base plate is made of anodized aluminum to withstand daily use and wear and tear. It bolts to a profile end or side and is commonly used to mount casters for an added layer of strength and durability. It requires a tap (page 861) to mount to the profile end.

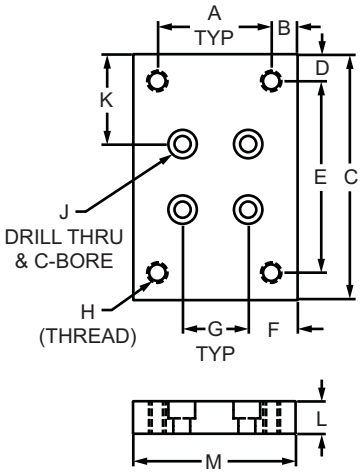

2418, 2420
25-2418, 40-2420

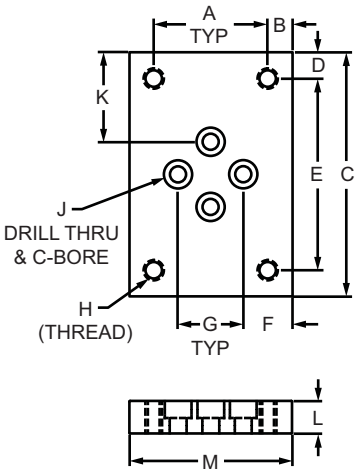

2419, 2426
25-2419, 40-2426

Part No.	Series	A	B	C	D	E	F	G	H	J	K	L	M	Weight
2418	10	1.750"	.375"	3.750"	.405"	2.940"	.750"	1.000"	5/16-18	1/4 SHCS	1.375"	.500"	2.500"	.424 lb
2418-Black	10	1.750"	.375"	3.750"	.405"	2.940"	.750"	1.000"	5/16-18	1/4 SHCS	1.375"	.500"	2.500"	.424 lb
2419	10	1.750"	.375"	3.750"	.405"	2.940"	1.375"	1.000"	5/16-18	1/4 SHCS	1.375"	.500"	2.500"	.423 lb
2419-Black	10	1.750"	.375"	3.750"	.405"	2.940"	1.375"	1.000"	5/16-18	1/4 SHCS	1.375"	.500"	2.500"	.423 lb
2426	15	1.750"	.625"	3.750"	.405"	2.940"	.750"	1.500"	5/16-18	5/16 SHCS	1.125"	.750"	3.000"	.765 lb
2426-Black	15	1.750"	.625"	3.750"	.405"	2.940"	.750"	1.500"	5/16-18	5/16 SHCS	1.125"	.750"	3.000"	.765 lb
2420	15	1.750"	.625"	3.750"	.405"	2.940"	.750"	1.500"	5/16-18	5/16 SHCS	1.125"	.750"	3.000"	.762 lb
2420-Black	15	1.750"	.625"	3.750"	.405"	2.940"	.750"	1.500"	5/16-18	5/16 SHCS	1.125"	.750"	3.000"	.762 lb
25-2418	25	44.50mm	9.00mm	95.00mm	10.20mm	74.60mm	18.70mm	25.00mm	M8 x 1.25	M6 SHCS	35.00mm	12.00mm	62.50mm	.1800 kg
25-2418-Black	25	44.50mm	9.00mm	95.00mm	10.20mm	74.60mm	18.70mm	25.00mm	M8 x 1.25	M6 SHCS	35.00mm	12.00mm	62.50mm	.1800 kg
25-2419	25	44.50mm	9.00mm	95.00mm	10.20mm	74.60mm	18.75mm	25.00mm	M8 x 1.25	M6 SHCS	35.00mm	12.00mm	62.50mm	.1800 kg
25-2419-Black	25	44.50mm	9.00mm	95.00mm	10.20mm	74.60mm	18.75mm	25.00mm	M8 x 1.25	M6 SHCS	35.00mm	12.00mm	62.50mm	.1800 kg
40-2426	40	44.40mm	17.80mm	97.00mm	11.20mm	74.60mm	20.00mm	40.00mm	M8 x 1.25	M8 SHCS	28.50mm	19.00mm	80.00mm	.3648 kg
40-2426-Black	40	44.40mm	17.80mm	97.00mm	11.20mm	74.60mm	20.00mm	40.00mm	M8 x 1.25	M8 SHCS	28.50mm	19.00mm	80.00mm	.3648 kg
40-2420	40	44.40mm	17.80mm	97.00mm	11.20mm	74.60mm	20.00mm	40.00mm	M8 x 1.25	M8 SHCS	28.50mm	19.00mm	80.00mm	.3682 kg
40-2420-Black	40	44.40mm	17.80mm	97.00mm	11.20mm	74.60mm	20.00mm	40.00mm	M8 x 1.25	M8 SHCS	28.50mm	19.00mm	80.00mm	.3682 kg

CONTINUE

Flange Mount Caster Base Plate (Continued)

Material Specifications

Part No.	Material	Alloy*	Process	Finish
2418	Aluminum	6105-T5	Milled	Clear Anodize
2418-Black				Black Anodize
2419				Clear Anodize
2419-Black				Black Anodize
2426				Clear Anodize
2426-Black				Black Anodize
2420				Clear Anodize
2420-Black				Black Anodize
25-2418				Clear Anodize
25-2418-Black				Black Anodize
25-2419				Clear Anodize
25-2419-Black				Black Anodize
40-2426				Clear Anodize
40-2426-Black				Black Anodize
40-2420				Clear Anodize
40-2420-Black				Black Anodize

* Or comparable

Required Machining Services

Machining Type	Machined	Reference Page
Tap Profile End	Mount to Profile End	861

Suggested Hardware (Mount to T-Slot)

Part No.	Series	Qty.	Bolt	T-Nut
3491	10	4	1/4-20 x 1/2" SHCS	Economy
3458	15	4	5/16-18 x 7/8" SHCS	Economy
75-3412	25	4	M6 x 12mm SHCS	Economy
75-3430	40	4	M8 x 20mm SHCS	Economy

Suggested Hardware (Mount to Profile End)

Part No.	Series	Qty.	Bolt
3064	10	4	1/4-20 x 3/4" SHCS
3123	15	4	5/16-18 x 1.25" SHCS
13-6516	25	4	M6 x 16mm SHCS (Blue)
13-8525	40	4	M8 x 25mm SHCS (Blue)

Mount to End of Profile

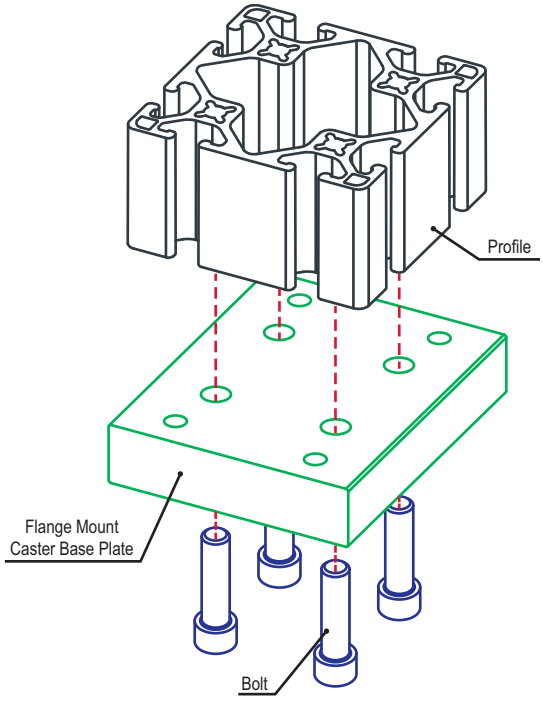

Mount to T-Slot

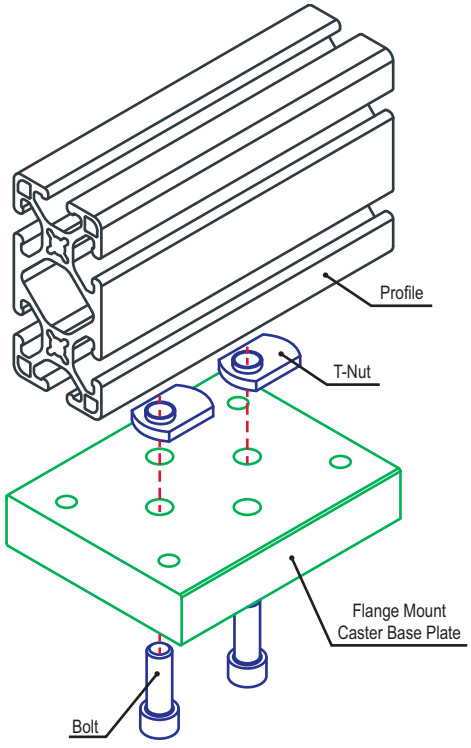

Heavy-Duty Flange Mount Caster Base Plate

Part Description:

The heavy-duty flange mount caster base plate is made of anodized aluminum to withstand daily use and wear and tear. It bolts to a profile end or side and is commonly used to mount casters with high load capacities for an added layer of strength and durability. The heavy-duty flange mount caster base plate requires a tap (page 861) to mount to the profile end.

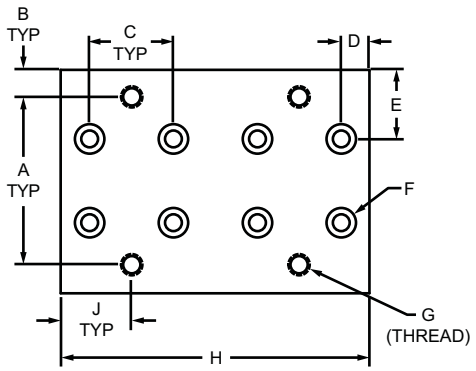

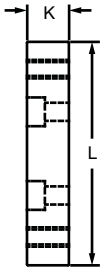

Part No.	Series	A	B	C	D	E	F	G	H	J	K	L	Weight
2147	15	3.000"	.500"	1.500"	.500"	1.250"	5/16 SHCS	3/8-16	5.500"	1.250"	.750"	4.000"	1.493 lb
2147-Black	15	3.000"	.500"	1.500"	.500"	1.250"	5/16 SHCS	3/8-16	5.500"	1.250"	.750"	4.000"	1.493 lb
40-2147	40	76.20mm	11.90mm	40.00mm	13.00mm	30.00mm	M8 SHCS	M10 x 1.5	146.00mm	34.90mm	19.00mm	100.00mm	.6917 kg
40-2147-Black	40	76.20mm	11.90mm	40.00mm	13.00mm	30.00mm	M8 SHCS	M10 x 1.5	146.00mm	34.90mm	19.00mm	100.00mm	.6917 kg

Material Specifications

Part No.	Material	Alloy*	Process	Finish
2147	Aluminum	6105-T5	Milled	Clear Anodize
2147-Black				Black Anodize
40-2147				Clear Anodize
40-2147-Black				Black Anodize

* Or comparable

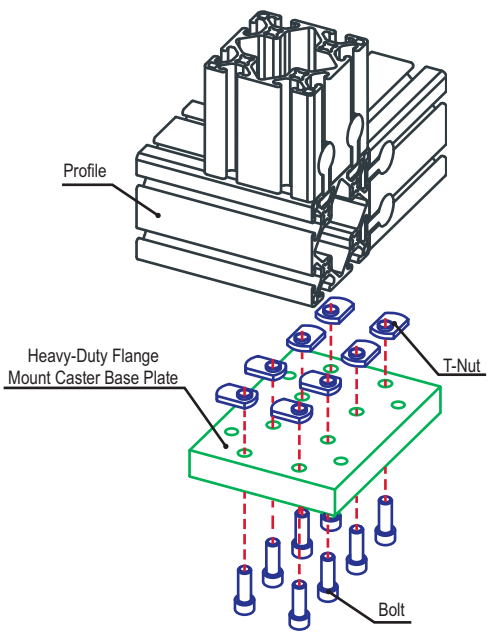

Required Machining Services

Machining Type	Machined	Reference Page
Tap Profile End	Mount to Profile End	861

Suggested Hardware (Mount to T-Slot)

Part No.	Series	Qty.	Bolt	T-Nut
3458	15	4 TO 8	5/16-18 x 7/8" SHCS	Economy
75-3430	40	4 TO 8	M8 x 20mm SHCS (Blue)	Economy

Suggested Hardware (Mount to Profile End)

Part No.	Series	Qty.	Bolt
3123	15	2 TO 4	5/16-18 x 1.25" SHCS
13-8530	40	2 TO 4	M8 x 30mm SHCS (Blue)

Leveling Caster Base Plate

Part Description:

The leveling caster base plate is made of anodized aluminum to withstand daily use and wear and tear. It bolts to a profile end or side and is commonly used to mount heavy-duty casters for an added layer of strength and durability. It requires a tap (page 861) to mount to the profile end.

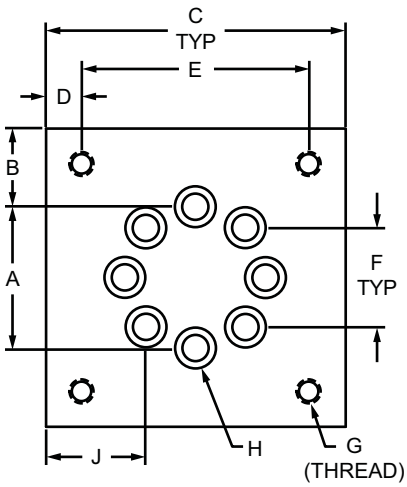

Part No.	Series	A	B	C	D	E	F	G	H	J	K	L	Weight
2406	10	1.414"	.793"	3.000"	.358"	2.284"	1.000"	1/4-20	1/4 SHCS	1.000"	.500"	3.000"	.396 lb
2406-Black	10	1.414"	.793"	3.000"	.358"	2.284"	1.000"	1/4-20	1/4 SHCS	1.000"	.500"	3.000"	.396 lb
2407	15	2.122"	.439"	3.000"	.358"	2.284"	1.500"	1/4-20	5/16 SHCS	.750"	.750"	3.000"	.567 lb
2407-Black	15	2.122"	.439"	3.000"	.358"	2.284"	1.500"	1/4-20	5/16 SHCS	.750"	.750"	3.000"	.567 lb
2408	15	2.122"	.689"	3.500"	.372"	2.756"	1.500"	5/16-18	5/16 SHCS	1.000"	.750"	3.500"	.793 lb
2408-Black	15	2.122"	.689"	3.500"	.372"	2.756"	1.500"	5/16-18	5/16 SHCS	1.000"	.750"	3.500"	.793 lb
2409	15	2.122"	.939"	4.000"	.622"	2.756"	1.500"	3/8-16	5/16 SHCS	1.250"	.750"	4.000"	1.057 lb
2409-Black	15	2.122"	.939"	4.000"	.622"	2.756"	1.500"	3/8-16	5/16 SHCS	1.250"	.750"	4.000"	1.057 lb
25-2406	25	35.36mm	20.42mm	76.20mm	9.09mm	58.02mm	25.00mm	M6 x 1.0	M6 SHCS	25.60mm	12.70mm	76.20mm	.1800 kg
25-2406-Black	25	35.36mm	20.42mm	76.20mm	9.09mm	58.02mm	25.00mm	M6 x 1.0	M6 SHCS	25.60mm	12.70mm	76.20mm	.1800 kg
40-2407	40	58.02mm	9.82mm	76.20mm	9.09mm	58.02mm	40.00mm	M6 x 1.0	M8 SHCS	18.10mm	19.05mm	76.20mm	.2558 kg
40-2407-Black	40	58.02mm	9.82mm	76.20mm	9.09mm	58.02mm	40.00mm	M6 x 1.0	M8 SHCS	18.10mm	19.05mm	76.20mm	.2558 kg
40-2408	40	56.56mm	16.17mm	88.90mm	9.45mm	70.00mm	40.00mm	M8 x 1.25	M8 SHCS	24.45mm	19.05mm	88.90mm	.3574 kg
40-2408-Black	40	56.56mm	16.17mm	88.90mm	9.45mm	70.00mm	40.00mm	M8 x 1.25	M8 SHCS	24.45mm	19.05mm	88.90mm	.3574 kg
40-2409	40	56.56mm	22.52mm	101.60mm	15.80mm	70.00mm	40.00mm	M10 x 1.50	M8 SHCS	30.80mm	19.05mm	101.60mm	.4779 kg
40-2409-Black	40	56.56mm	22.52mm	101.60mm	15.80mm	70.00mm	40.00mm	M10 x 1.50	M8 SHCS	30.80mm	19.05mm	101.60mm	.4779 kg

CONTINUE

Leveling Caster Base Plate (Continued)

Material Specifications

Part No.	Material	Alloy*	Process	Finish
2406	Aluminum	6105-T5	Milled	Clear Anodize
2406-Black				Black Anodize
2407				Clear Anodize
2407-Black				Black Anodize
2408				Clear Anodize
2408-Black				Black Anodize
2409				Clear Anodize
2409-Black				Black Anodize
25-2406				Clear Anodize
25-2406-Black				Black Anodize
40-2407				Clear Anodize
40-2407-Black				Black Anodize
40-2408				Clear Anodize
40-2408-Black				Black Anodize
40-2409				Clear Anodize
40-2409-Black				Black Anodize

* Or comparable

Required Machining Services

Machining Type	Machined	Reference Page
Tap Profile End	Mount to Profile End	861

Suggested Hardware (Mount to T-Slot)

Part No.	Series	Qty.	Bolt	T-Nut
3491	10	4	1/4-20 x 1/2" SHCS	Economy
3458	15	4	5/16-18 x 7/8" SHCS	Economy
75-3412	25	4	M6 x 12mm SHCS	Economy
75-3430	40	4	M8 x 20mm SHCS	Economy

Suggested Hardware (Mount to Profile End)

Part No.	Series	Qty.	Bolt
3064	10	4	1/4-20 x 3/4" SHCS
3123	15	4	5/16-18 x 1.25" SHCS
13-6516	25	4	M6 x 16mm SHCS (Blue)
13-8525	40	4	M8 x 25mm SHCS (Blue)

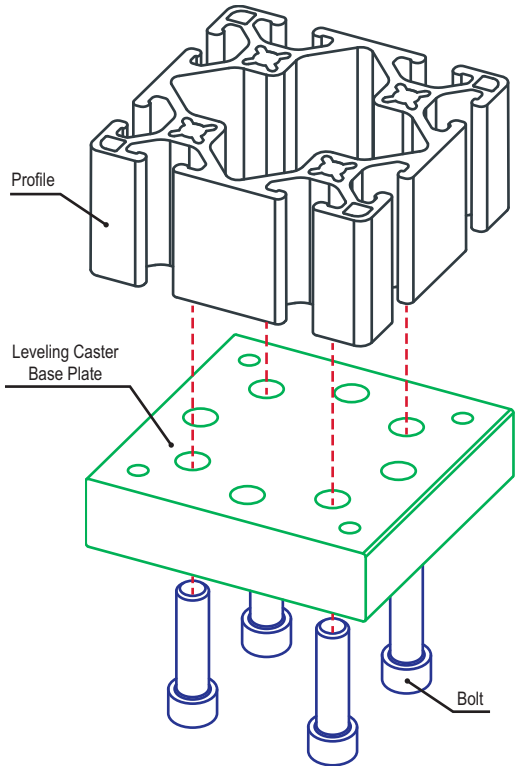

Position Floor Lock Base Plate

Part Description:

The position floor lock base plate is made of anodized aluminum to withstand daily use and wear and tear. It bolts to a profile end or side and is commonly used to mount position floor locks for an added layer of strength and durability. It requires a tap (page 861) to mount to a profile end.

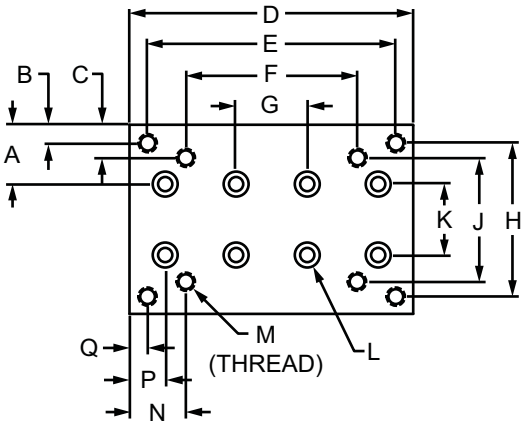

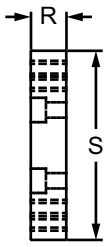

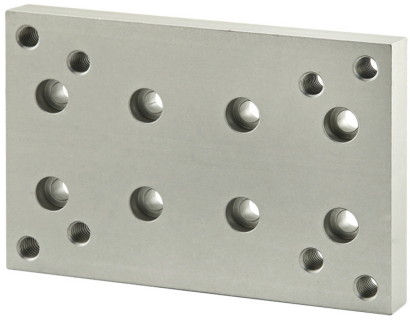

Part No.	Series	A	B	C	D	E	F	G	H	J
2148	15	1.250"	.375"	.688"	6.000"	5.250"	3.624"	1.500"	3.250"	2.624"
2148-Black	15	1.250"	.375"	.688"	6.000"	5.250"	3.624"	1.500"	3.250"	2.624"
40-2148	40	30.00mm	8.73mm	16.68mm	158.00mm	133.34mm	92.00mm	40.00mm	82.54mm	66.64mm
40-2148-Black	40	30.00mm	8.73mm	16.68mm	158.00mm	133.34mm	92.00mm	40.00mm	82.54mm	66.64mm

Part No.	Series	K	L	M	N	P	Q	R	S	Weight
2148	15	1.500"	5/16 SHCS	3/8-16	1.188"	.750"	.375"	.750"	4.000"	1.595 lb
2148-Black	15	1.500"	5/16 SHCS	3/8-16	1.188"	.750"	.375"	.750"	4.000"	1.595 lb
40-2148	40	40.00mm	M8 SHCS	M10 x 1.50	33.00mm	19.00mm	12.33mm	19.00mm	100.00mm	.7407 kg
40-2148-Black	40	40.00mm	M8 SHCS	M10 x 1.50	33.00mm	19.00mm	12.33mm	19.00mm	100.00mm	.7407 kg

CONTINUE

Position Floor Lock Base Plate (Continued)

Material Specifications

Part No.	Material	Alloy*	Process	Finish
2148	Aluminum	6105-T5	Milled	Clear Anodize
2148-Black				Black Anodize
40-2148				Clear Anodize
40-2148-Black				Black Anodize

* Or comparable

Required Machining Services

Machining Type	Machined	Reference Page
Tap Profile End	Mounting Profile	861

Suggested Hardware (Mount to T-Slot)

Part No.	Series	Qty.	Bolt	T-Nut
3458	15	4 TO 8	5/16-18 x 7/8" SHCS	Economy
75-3430	40	4 TO 8	M8 x 20mm SHCS	Economy

Suggested Hardware (Mount to Profile End)

Part No.	Series	Qty.	Bolt
3123	15	4 TO 8	5/16-18 x 1.25" SHCS
13-8530	40	4 TO 8	M8 x 30mm SHCS (Blue)

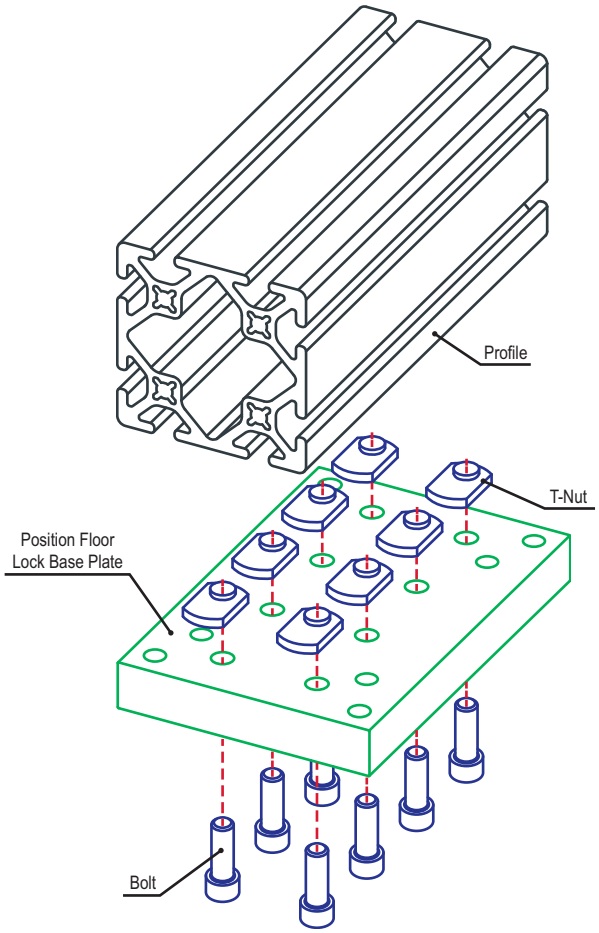

3 Hole - Center Tap Base Plate

Part Description:

The 3 hole – center tap base plate is made of anodized aluminum to withstand daily use and wear and tear. It mounts leveling feet and threaded stem casters, and is commonly used on a rectangular profile end to center mount the foot or caster. The 3 hole – center tap base plate can also be used on a profile side. It requires a tap (page 861) to mount to a profile end.

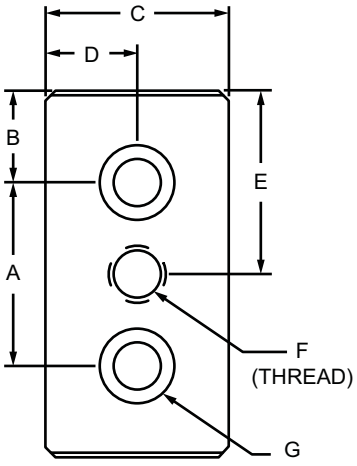

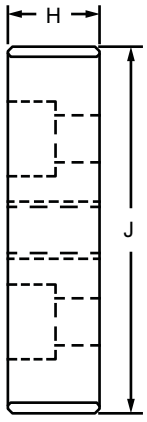

Part No.	Series	Color	A	B	C	D	E	F	G	H	J	Weight
2124	10	Clear	1.000"	.500"	1.000"	.500"	1.000"	5/16-18	1/4 SHCS	.500"	2.000"	.084 lb
2124-Black	10	Black	1.000"	.500"	1.000"	.500"	1.000"	5/16-18	1/4 SHCS	.500"	2.000"	.084 lb
2128	10	Clear	1.000"	.500"	1.000"	.500"	1.000"	1/4-20	1/4 SHCS	.500"	2.000"	.086 lb
2128-Black	10	Black	1.000"	.500"	1.000"	.500"	1.000"	1/4-20	1/4 SHCS	.500"	2.000"	.086 lb
2129	10	Clear	1.000"	.500"	1.000"	.500"	1.000"	3/8-16	1/4 SHCS	.500"	2.000"	.083 lb
2129-Black	10	Black	1.000"	.500"	1.000"	.500"	1.000"	3/8-16	1/4 SHCS	.500"	2.000"	.083 lb
2137	10	Clear	1.000"	.500"	1.000"	.500"	1.000"	7/16-14	1/4 SHCS	.500"	2.000"	.082 lb
2137-Black	10	Black	1.000"	.500"	1.000"	.500"	1.000"	7/16-14	1/4 SHCS	.500"	2.000"	.082 lb
2361	10	Clear	1.000"	.500"	1.000"	.500"	1.000"	1/2-13	1/4 SHCS	.500"	2.000"	.079 lb
2361-Black	10	Black	1.000"	.500"	1.000"	.500"	1.000"	1/2-13	1/4 SHCS	.500"	2.000"	.079 lb
2130	15	Clear	1.500"	.750"	1.500"	.750"	1.500"	3/8-16	5/16 SHCS	.750"	3.000"	.298 lb
2130-Black	15	Black	1.500"	.750"	1.500"	.750"	1.500"	3/8-16	5/16 SHCS	.750"	3.000"	.298 lb
2135	15	Clear	1.500"	.750"	1.500"	.750"	1.500"	1/2-13	5/16 SHCS	.750"	3.000"	.294 lb
2135-Black	15	Black	1.500"	.750"	1.500"	.750"	1.500"	1/2-13	5/16 SHCS	.750"	3.000"	.294 lb
2138	15	Clear	1.500"	.750"	1.500"	.750"	1.500"	7/16-14	5/16 SHCS	.750"	3.000"	.297 lb
2138-Black	15	Black	1.500"	.750"	1.500"	.750"	1.500"	7/16-14	5/16 SHCS	.750"	3.000"	.297 lb
2365	15	Clear	1.500"	.750"	1.500"	.750"	1.500"	3/4-10	5/16 SHCS	.750"	3.000"	.277 lb
2365-Black	15	Black	1.500"	.750"	1.500"	.750"	1.500"	3/4-10	5/16 SHCS	.750"	3.000"	.277 lb

CONTINUE

3 Hole - Center Tap Base Plate (Continued)

Part No.	Series	Color	A	B	C	D	E	F	G	H	J	Weight
25-2128	25	Clear	25.00mm	12.50mm	25.00mm	12.50mm	25.00mm	M6 x 1.0	M6 SHCS	12.00mm	50.00mm	.0358 kg
25-2128-Black	25	Black	25.00mm	12.50mm	25.00mm	12.50mm	25.00mm	M6 x 1.0	M6 SHCS	12.00mm	50.00mm	.0358 kg
25-2129	25	Clear	25.00mm	12.50mm	25.00mm	12.50mm	25.00mm	M8 x 1.25	M6 SHCS	12.00mm	50.00mm	.0347 kg
25-2129-Black	25	Black	25.00mm	12.50mm	25.00mm	12.50mm	25.00mm	M8 x 1.25	M6 SHCS	12.00mm	50.00mm	.0347 kg
25-2137	25	Clear	25.00mm	12.50mm	25.00mm	12.50mm	25.00mm	M10 x 1.50	M6 SHCS	12.00mm	50.00mm	.0340 kg
25-2137-Black	25	Black	25.00mm	12.50mm	25.00mm	12.50mm	25.00mm	M10 x 1.50	M6 SHCS	12.00mm	50.00mm	.0340 kg
25-2361	25	Clear	25.00mm	12.50mm	25.00mm	12.50mm	25.00mm	M12 x 1.75	M6 SHCS	12.00mm	50.00mm	.0327 kg
25-2361-Black	25	Black	25.00mm	12.50mm	25.00mm	12.50mm	25.00mm	M12 x 1.75	M6 SHCS	12.00mm	50.00mm	.0327 kg
40-2130	40	Clear	40.00mm	20.00mm	40.00mm	20.00mm	40.00mm	M10 x 1.50	M8 SHCS	19.00mm	80.00mm	.1485 kg
40-2130-Black	40	Black	40.00mm	20.00mm	40.00mm	20.00mm	40.00mm	M10 x 1.50	M8 SHCS	19.00mm	80.00mm	.1485 kg
40-2135	40	Clear	40.00mm	20.00mm	40.00mm	20.00mm	40.00mm	M12 x 1.75	M8 SHCS	19.00mm	80.00mm	.1471 kg
40-2135-Black	40	Black	40.00mm	20.00mm	40.00mm	20.00mm	40.00mm	M12 x 1.75	M8 SHCS	19.00mm	80.00mm	.1471 kg
40-2138	40	Clear	40.00mm	20.00mm	40.00mm	20.00mm	40.00mm	M16 x 2.0	M8 SHCS	19.00mm	80.00mm	.1433 kg
40-2138-Black	40	Black	40.00mm	20.00mm	40.00mm	20.00mm	40.00mm	M16 x 2.0	M8 SHCS	19.00mm	80.00mm	.1433 kg
40-2365	40	Clear	40.00mm	20.00mm	40.00mm	20.00mm	40.00mm	M20 x 2.5	M8 SHCS	19.00mm	80.00mm	.1380 kg
40-2365-Black	40	Black	40.00mm	20.00mm	40.00mm	20.00mm	40.00mm	M20 x 2.5	M8 SHCS	19.00mm	80.00mm	.1380 kg

Material Specifications

Material	Alloy*	Process	Finish
Aluminum	6105-T5	Milled	Anodize

* Or comparable

Required Machining Services

Machining Type	Machined	Reference Page
Tap Profile End	Mount to Profile End	861

Suggested Hardware (Mount to T-Slot)

Part No.	Series	Qty.	Bolt	T-Nut
3491	10	2	1/4-20 x 1/2" SHCS	Economy
3458	15	2	5/16-18 x 7/8" SHCS	Economy
75-3412	25	2	M6 x 12mm SHCS	Economy
75-3430	40	2	M8 x 20mm SHCS	Economy

Suggested Hardware (Mount to Profile End)

Part No.	Series	Qty.	Bolt
3064	10	2	1/4-20 x 3/4" SHCS
3123	15	2	5/16-18 x 1.25" SHCS
13-6516	25	2	M6 x 16mm SHCS (Blue)
13-8525	40	2	M8 x 25mm SHCS (Blue)

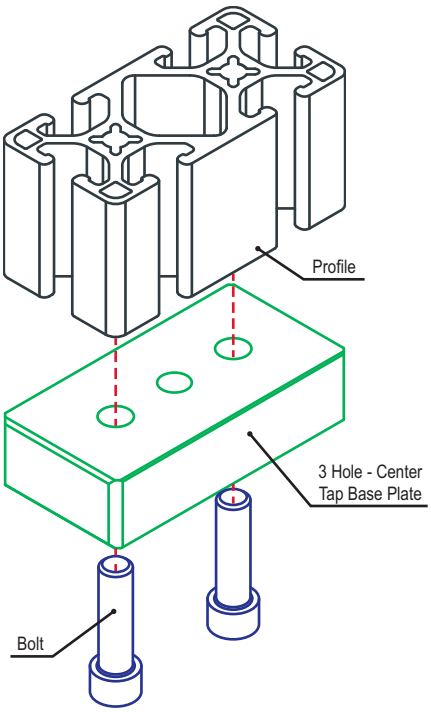

5 Hole - Center Tap Base Plate

Part Description:

The 5 hole – center tap base plate is made of anodized aluminum to withstand daily use and wear and tear. It mounts leveling feet and threaded stem casters, and is commonly used on profiles to center mount a foot or caster. The 5 hole – center tap base plate can also be used on a profile side. It requires a tap (page 861) to mount to a profile end.

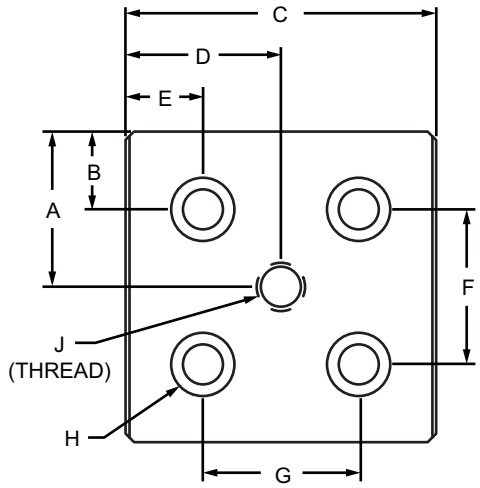

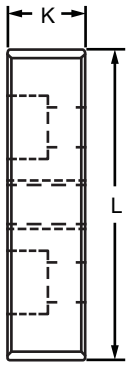

Part No.	Series	Color	A	B	C	D	E	F	G	H	J	K	L	Weight
2127	10	Clear	1.000"	.500"	2.000"	1.000"	.500"	1.000"	1.000"	1/4 SHCS	5/16-18	.500"	2.000"	.172 lb
2127-Black	10	Black	1.000"	.500"	2.000"	1.000"	.500"	1.000"	1.000"	1/4 SHCS	5/16-18	.500"	2.000"	.172 lb
2131	10	Clear	1.000"	.500"	2.000"	1.000"	.500"	1.000"	1.000"	1/4 SHCS	3/8-16	.500"	2.000"	.169 lb
2131-Black	10	Black	1.000"	.500"	2.000"	1.000"	.500"	1.000"	1.000"	1/4 SHCS	3/8-16	.500"	2.000"	.169 lb
2132	10	Clear	1.000"	.500"	2.000"	1.000"	.500"	1.000"	1.000"	1/4 SHCS	1/2-13	.500"	2.000"	.166 lb
2132-Black	10	Black	1.000"	.500"	2.000"	1.000"	.500"	1.000"	1.000"	1/4 SHCS	1/2-13	.500"	2.000"	.166 lb
2139	10	Clear	1.000"	.500"	2.000"	1.000"	.500"	1.000"	1.000"	1/4 SHCS	7/16-14	.500"	2.000"	.168 lb
2139-Black	10	Black	1.000"	.500"	2.000"	1.000"	.500"	1.000"	1.000"	1/4 SHCS	7/16-14	.500"	2.000"	.168 lb
2362	10	Clear	1.000"	.500"	2.000"	1.000"	.500"	1.000"	1.000"	1/4 SHCS	3/4-10	.500"	2.000"	.156 lb
2362-Black	10	Black	1.000"	.500"	2.000"	1.000"	.500"	1.000"	1.000"	1/4 SHCS	3/4-10	.500"	2.000"	.156 lb
2140	15	Clear	1.500"	.750"	3.000"	1.500"	.750"	1.500"	1.500"	5/16 SHCS	1/2-13	.750"	3.000"	.604 lb
2140-Black	15	Black	1.500"	.750"	3.000"	1.500"	.750"	1.500"	1.500"	5/16 SHCS	1/2-13	.750"	3.000"	.604 lb
2145	15	Clear	1.500"	.750"	3.000"	1.500"	.750"	1.500"	1.500"	5/16 SHCS	7/16-14	.750"	3.000"	.607 lb
2145-Black	15	Black	1.500"	.750"	3.000"	1.500"	.750"	1.500"	1.500"	5/16 SHCS	7/16-14	.750"	3.000"	.607 lb
2366	15	Clear	1.500"	.750"	3.000"	1.500"	.750"	1.500"	1.500"	5/16 SHCS	3/4-10	.750"	3.000"	.588 lb
2366-Black	15	Black	1.500"	.750"	3.000"	1.500"	.750"	1.500"	1.500"	5/16 SHCS	3/4-10	.750"	3.000"	.588 lb

CONTINUE

5 Hole - Center Tap Base Plate (Continued)

Part No.	Series	Color	A	B	C	D	E	F	G	H	J	K	L	Weight
25-2131	25	Clear	25.00mm	12.50mm	50.00mm	25.00mm	12.50mm	25.00mm	25.00mm	M6 SHCS	M10 x 1.50	12.00mm	50.00mm	.0700 kg
25-2131-Black	25	Black	25.00mm	12.50mm	50.00mm	25.00mm	12.50mm	25.00mm	25.00mm	M6 SHCS	M10 x 1.50	12.00mm	50.00mm	.0700 kg
25-2132	25	Clear	25.00mm	12.50mm	50.00mm	25.00mm	12.50mm	25.00mm	25.00mm	M6 SHCS	M16 x 2.0	12.00mm	50.00mm	.0700 kg
25-2132-Black	25	Black	25.00mm	12.50mm	50.00mm	25.00mm	12.50mm	25.00mm	25.00mm	M6 SHCS	M16 x 2.0	12.00mm	50.00mm	.0700 kg
25-2139	25	Clear	25.00mm	12.50mm	50.00mm	25.00mm	12.50mm	25.00mm	25.00mm	M6 SHCS	M12 x 1.75	12.00mm	50.00mm	.0689 kg
25-2139-Black	25	Black	25.00mm	12.50mm	50.00mm	25.00mm	12.50mm	25.00mm	25.00mm	M6 SHCS	M12 x 1.75	12.00mm	50.00mm	.0689 kg
25-2362	25	Clear	25.00mm	12.50mm	50.00mm	25.00mm	12.50mm	25.00mm	25.00mm	M6 SHCS	M20 x 2.5	12.00mm	50.00mm	.0630 kg
25-2362-Black	25	Black	25.00mm	12.50mm	50.00mm	25.00mm	12.50mm	25.00mm	25.00mm	M6 SHCS	M20 x 2.5	12.00mm	50.00mm	.0630 kg
40-2140	40	Clear	40.00mm	20.00mm	80.00mm	40.00mm	20.00mm	40.00mm	40.00mm	M8 SHCS	M12 x 1.75	19.00mm	80.00mm	.3002 kg
40-2140-Black	40	Black	40.00mm	20.00mm	80.00mm	40.00mm	20.00mm	40.00mm	40.00mm	M8 SHCS	M12 x 1.75	19.00mm	80.00mm	.3002 kg
40-2145	40	Clear	40.00mm	20.00mm	80.00mm	40.00mm	20.00mm	40.00mm	40.00mm	M8 SHCS	M16 x 2.0	19.00mm	80.00mm	.2950 kg
40-2145-Black	40	Black	40.00mm	20.00mm	80.00mm	40.00mm	20.00mm	40.00mm	40.00mm	M8 SHCS	M16 x 2.0	19.00mm	80.00mm	.2950 kg
40-2366	40	Clear	40.00mm	20.00mm	80.00mm	40.00mm	20.00mm	40.00mm	40.00mm	M8 SHCS	M20 x 2.5	19.00mm	80.00mm	.2921 kg
40-2366-Black	40	Black	40.00mm	20.00mm	80.00mm	40.00mm	20.00mm	40.00mm	40.00mm	M8 SHCS	M20 x 2.5	19.00mm	80.00mm	.2921 kg

Material Specifications

Material	Alloy*	Process	Finish
Aluminum	6105-T5	Milled	Anodize

* Or comparable

Required Machining Services

Machining Type	Machined	Reference Page
Tap Profile End	Mounting Profile	861

Suggested Hardware (Mount to T-Slot)

Part No.	Series	Qty.	Bolt	T-Nut
3491	10	4	1/4-20 x 1/2" SHCS	Economy
3458	15	4	5/16-18 x 7/8" SHCS	Economy
75-3412	25	4	M6 x 12mm SHCS	Economy
75-3430	40	4	M8 x 20mm SHCS	Economy

Suggested Hardware (Mount to Profile End)

Part No.	Series	Qty.	Bolt
3064	10	4	1/4-20 x 3/4" SHCS
3123	15	4	5/16-18 x 1.25" SHCS
13-6516	25	4	M6 x 16mm SHCS (Blue)
13-8525	40	4	M8 x 25mm SHCS (Blue)

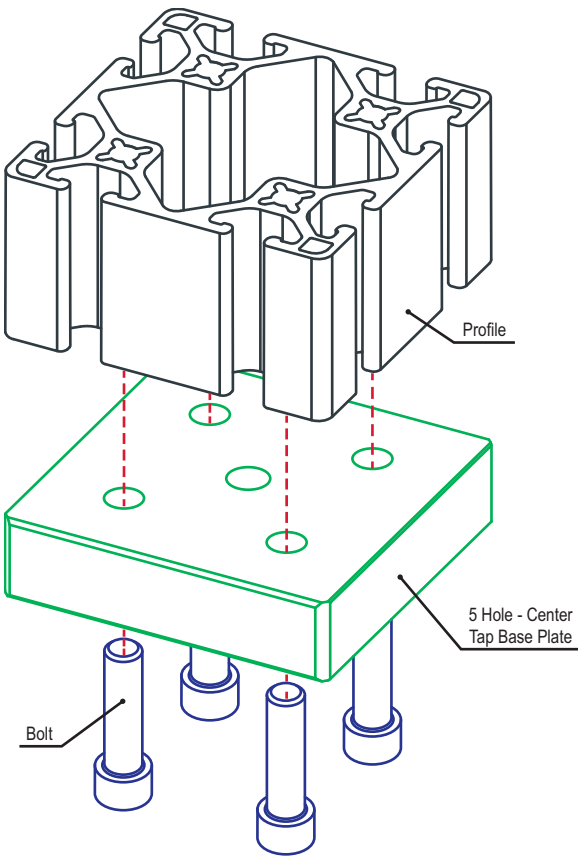

4 Hole - Offset Tap Base Plate

Part Description:

The 4 hole – offset tap base plate is made of anodized aluminum to withstand daily use and wear and tear. It mounts leveling feet and threaded stem casters to a profile end or side for an added layer of strength and durability. The offset provides clearance for the threaded stem providing a greater clearance area. It requires a tap (page 861) to mount to a profile end.

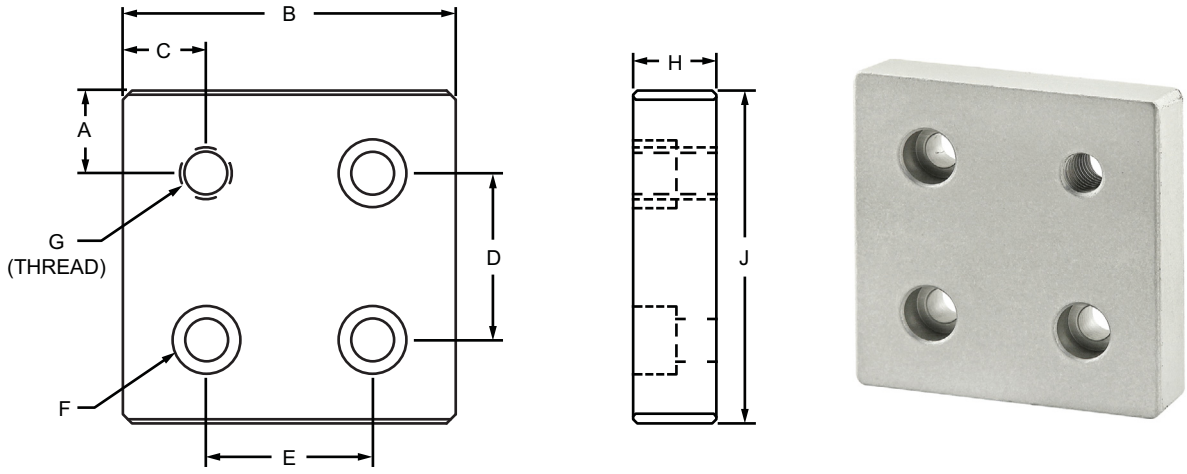

Part No.	Series	Color	A	B	C	D	E	F	G	H	J	Weight
2136	10	Clear	.500"	2.000"	.500"	1.000"	1.000"	1/4 SHCS	5/16-18	.500"	2.000"	.176 lb
2136-Black	10	Black	.500"	2.000"	.500"	1.000"	1.000"	1/4 SHCS	5/16-18	.500"	2.000"	.176 lb
2142	10	Clear	.500"	2.000"	.500"	1.000"	1.000"	1/4 SHCS	3/8-16	.500"	2.000"	.175 lb
2142-Black	10	Black	.500"	2.000"	.500"	1.000"	1.000"	1/4 SHCS	3/8-16	.500"	2.000"	.175 lb
2143	10	Clear	.500"	2.000"	.500"	1.000"	1.000"	1/4 SHCS	7/16-14	.500"	2.000"	.173 lb
2143-Black	10	Black	.500"	2.000"	.500"	1.000"	1.000"	1/4 SHCS	7/16-14	.500"	2.000"	.173 lb
2363	10	Clear	.500"	2.000"	.500"	1.000"	1.000"	1/4 SHCS	1/2-13	.500"	2.000"	.171 lb
2363-Black	10	Black	.500"	2.000"	.500"	1.000"	1.000"	1/4 SHCS	1/2-13	.500"	2.000"	.171 lb
2364	10	Clear	.500"	2.000"	.500"	1.000"	1.000"	1/4 SHCS	3/4-10	.500"	2.000"	.160 lb
2364-Black	10	Black	.500"	2.000"	.500"	1.000"	1.000"	1/4 SHCS	3/4-10	.500"	2.000"	.160 lb
2141	15	Clear	.750"	3.000"	.750"	1.500"	1.500"	5/16 SHCS	1/2-13	.750"	3.000"	.616 lb
2141-Black	15	Black	.750"	3.000"	.750"	1.500"	1.500"	5/16 SHCS	1/2-13	.750"	3.000"	.616 lb
2146	15	Clear	.750"	3.000"	.750"	1.500"	1.500"	5/16 SHCS	7/16-14	.750"	3.000"	.618 lb
2146-Black	15	Black	.750"	3.000"	.750"	1.500"	1.500"	5/16 SHCS	7/16-14	.750"	3.000"	.618 lb
2367	15	Clear	.750"	3.000"	.750"	1.500"	1.500"	5/16 SHCS	3/4-10	.750"	3.000"	.599 lb
2367-Black	15	Black	.750"	3.000"	.750"	1.500"	1.500"	5/16 SHCS	3/4-10	.750"	3.000"	.599 lb

CONTINUE

4 Hole - Offset Tap Base Plate (Continued)

Part No.	Series	Color	A	B	C	D	E	F	G	H	J	Weight
25-2142	25	Clear	12.50mm	50.00mm	12.50mm	25.00mm	25.00mm	M6 SHCS	M10 x 1.50	12.00mm	50.00mm	.0717 kg
25-2142-Black	25	Black	12.50mm	50.00mm	12.50mm	25.00mm	25.00mm	M6 SHCS	M10 x 1.50	12.00mm	50.00mm	.0717 kg
40-2141	40	Clear	20.00mm	80.00mm	20.00mm	40.00mm	40.00mm	M8 SHCS	M12 x 1.75	19.00mm	80.00mm	.3065 kg
40-2141-Black	40	Black	20.00mm	80.00mm	20.00mm	40.00mm	40.00mm	M8 SHCS	M12 x 1.75	19.00mm	80.00mm	.3065 kg
40-2146	40	Clear	20.00mm	80.00mm	20.00mm	40.00mm	40.00mm	M8 SHCS	M16 x 2.0	19.00mm	80.00mm	.3030 kg
40-2146-Black	40	Black	20.00mm	80.00mm	20.00mm	40.00mm	40.00mm	M8 SHCS	M16 x 2.0	19.00mm	80.00mm	.3030 kg
40-2367	40	Clear	20.00mm	80.00mm	20.00mm	40.00mm	40.00mm	M8 SHCS	M20 x 2.5	19.00mm	80.00mm	.2963 kg
40-2367-Black	40	Black	20.00mm	80.00mm	20.00mm	40.00mm	40.00mm	M8 SHCS	M20 x 2.5	19.00mm	80.00mm	.2963 kg

Material Specifications

Material	Alloy*	Process	Finish
Aluminum	6105-T5	Milled	Anodize

* Or comparable

Required Machining Services

Machining Type	Machined	Reference Page
Tap Profile End	Mount to Profile End	861

Suggested Hardware (Mount to T-Slot)

Part No.	Series	Qty.	Bolt	T-Nut
3491	10	3	1/4-20 x 1/2" SHCS	Economy
3458	15	3	5/16-18 x 7/8" SHCS	Economy
75-3412	25	3	M6 x 12mm SHCS	Economy
75-3430	40	3	M8 x 20mm SHCS	Economy

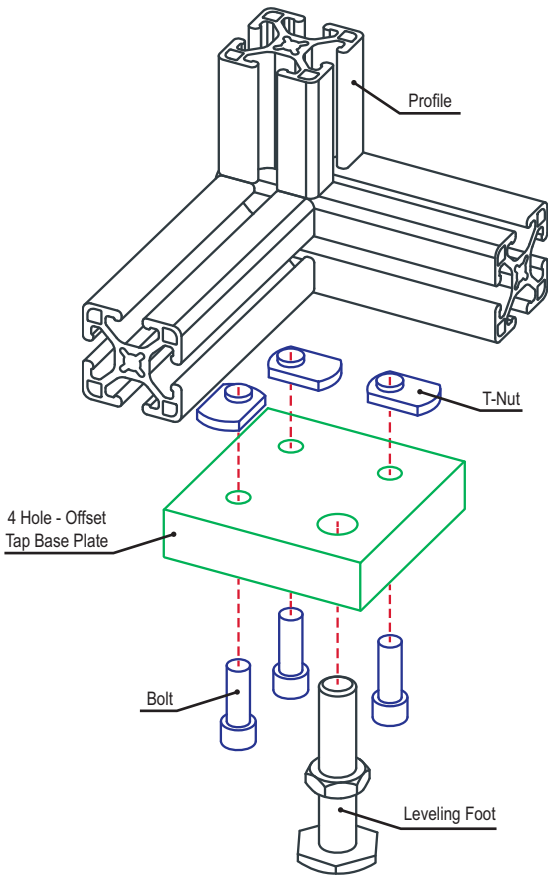

2 Hole - Leveling Anchoring Base Plate

Part Description:

The 2 hole – leveling anchoring base plate is made of anodized aluminum to withstand daily use and wear and tear. It mounts to a profile end and provides an offset hole that allows a leveling foot and floor anchor to be used at the same time. The extension pin helps align the base plate within the T-slot to keep the profile from rotating. A tap is required (page 861) to mount to the profile end.

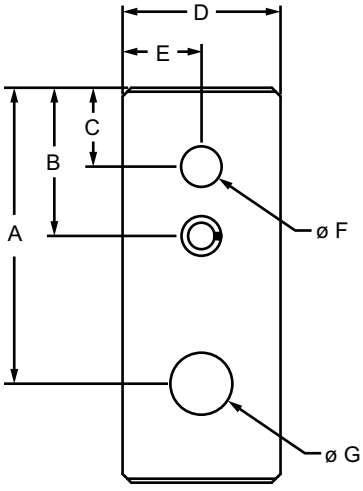

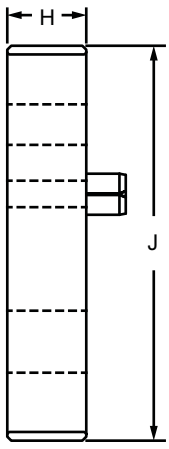

Part No.	Series	Color	A	B	C	D	E	F	G	H	J	Weight
2166	10	Clear	1.875"	.940"	.500"	1.000"	.500"	.257"	.390"	.500"	2.500"	.116 lb
2166-Black	10	Black	1.875"	.940"	.500"	1.000"	.500"	.257"	.390"	.500"	2.500"	.116 lb
2165	15	Clear	2.500"	1.410"	.750"	1.500"	.750"	.390"	.531"	.500"	3.000"	.215 lb
2165-Black	15	Black	2.500"	1.410"	.750"	1.500"	.750"	.390"	.531"	.500"	3.000"	.215 lb
40-2165	40	Clear	66.68mm	37.90mm	20.00mm	40.00mm	20.00mm	9.91mm	13.49mm	12.00mm	80.00mm	.1009 kg
40-2165-Black	40	Black	66.68mm	37.90mm	20.00mm	40.00mm	20.00mm	9.91mm	13.49mm	12.00mm	80.00mm	.1009 kg

Material Specifications

Material	Alloy*	Process	Finish
Aluminum	6105-T5	Milled	Anodize

* Or comparable

Required Machining Services

Machining Type	Machined	Reference Page
Tap Profile End	Mounting Profile	861

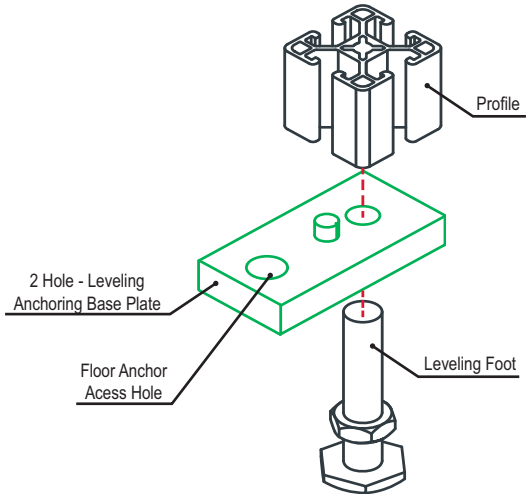

Part Description:

The 4 hole – leveling anchoring base plate is made of anodized aluminum to withstand daily use and wear and tear. It mounts to a profile end and provides an offset hole that allows a leveling foot and floor anchor to be used at the same time. The mounting hardware helps align the base plate within the T-slot to keep the profile from rotating. A tap is required (page 861) to mount to the profile end.

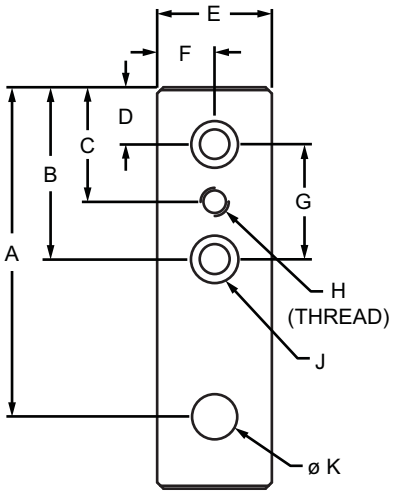

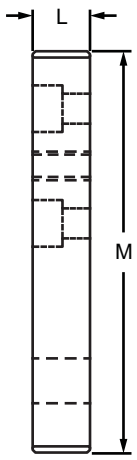

Part No.	Series	Color	A	B	C	D	E	F	G	H	J	K	L	M	Weight
2167	10	Clear	2.875"	1.500"	1.000"	.500"	1.000"	.500"	1.000"	1/4-20	1/4 SHCS	.390"	.500"	3.500"	.153 lb
2167-Black	10	Black	2.875"	1.500"	1.000"	.500"	1.000"	.500"	1.000"	1/4-20	1/4 SHCS	.390"	.500"	3.500"	.153 lb
2168	10	Clear	2.875"	1.500"	1.000"	.500"	1.000"	.500"	1.000"	3/8-16	1/4 SHCS	.390"	.500"	3.500"	.150 lb
2168-Black	10	Black	2.875"	1.500"	1.000"	.500"	1.000"	.500"	1.000"	3/8-16	1/4 SHCS	.390"	.500"	3.500"	.150 lb
2170	15	Clear	4.000"	2.250"	1.500"	.750"	1.500"	.750"	1.500"	3/8-16	5/16 SHCS	.531"	.750"	4.500"	.445 lb
2170-Black	15	Black	4.000"	2.250"	1.500"	.750"	1.500"	.750"	1.500"	3/8-16	5/16 SHCS	.531"	.750"	4.500"	.445 lb
2175	15	Clear	4.000"	2.250"	1.500"	.750"	1.500"	.750"	1.500"	1/2-13	5/16 SHCS	.531"	.750"	4.500"	.441 lb
2175-Black	15	Black	4.000"	2.250"	1.500"	.750"	1.500"	.750"	1.500"	1/2-13	5/16 SHCS	.531"	.750"	4.500"	.441 lb
40-2170	40	Clear	106.68mm	60.00mm	40.00mm	20.00mm	40.00mm	20.00mm	40.00mm	M10 x 1.50	M8 SHCS	13.50mm	19.00mm	120.00mm	.2216 kg
40-2170-Black	40	Black	106.68mm	60.00mm	40.00mm	20.00mm	40.00mm	20.00mm	40.00mm	M10 x 1.50	M8 SHCS	13.50mm	19.00mm	120.00mm	.2216 kg
40-2175	40	Clear	106.68mm	60.00mm	40.00mm	20.00mm	40.00mm	20.00mm	40.00mm	M12 x 1.75	M8 SHCS	13.50mm	19.00mm	120.00mm	.2199 kg
40-2175-Black	40	Black	106.68mm	60.00mm	40.00mm	20.00mm	40.00mm	20.00mm	40.00mm	M12 x 1.75	M8 SHCS	13.50mm	19.00mm	120.00mm	.2199 kg

CONTINUE

4 Hole - Leveling Anchoring Base Plate (Continued)

Material Specifications

Material	Alloy*	Process	Finish
Aluminum	6105-T5	Milled	Anodize

* Or comparable

Required Machining Services

Machining Type	Machined	Reference Page
Tap Profile End	Mounting Profile	861

Suggested Hardware (Mount to T-Slot)

Part No.	Series	Qty.	Bolt	T-Nut
3491	10	2	1/4-20 x 1/2" SHCS	Economy
3458	15	2	5/16-18 x 7/8" SHCS	Economy
75-3430	40	2	M8 x 20mm SHCS	Economy

Suggested Hardware (Mount to Profile End)

Part No.	Series	Qty.	Bolt
3064	10	2	1/4-20 x 3/4" SHCS
3123	15	2	5/16-18 x 1.25" SHCS
13-8525	40	2	M8 x 25mm SHCS (Blue)

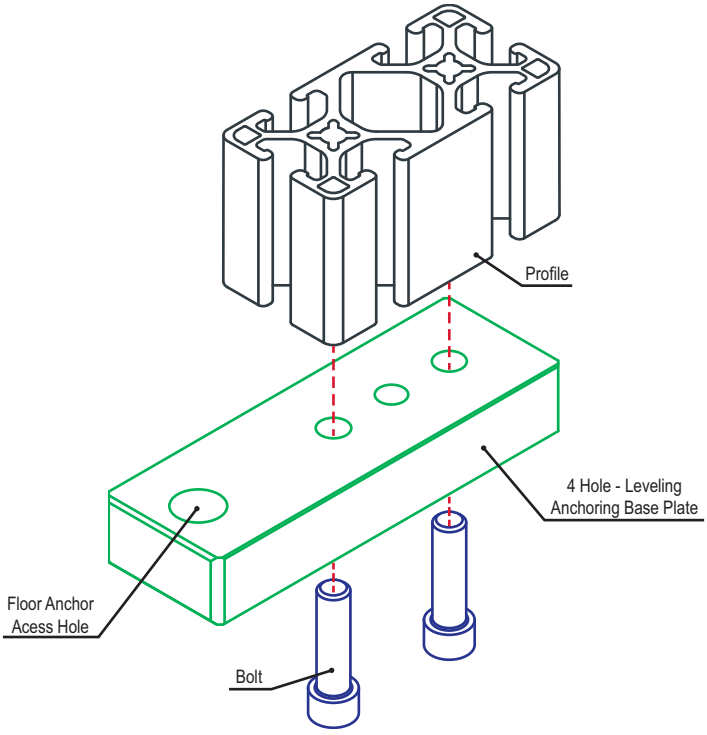

Part Description:

The 6 hole – leveling anchoring base plate is made of anodized aluminum to withstand daily use and wear and tear. It mounts to a profile end and provides an offset hole that allows a leveling foot and floor anchor to be used at the same time. A tap is required (page 861) to mount to the profile end.

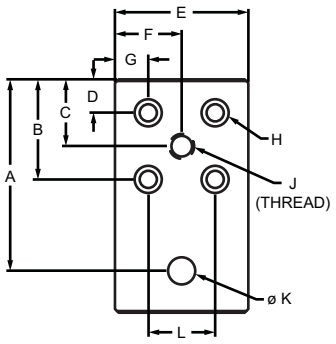

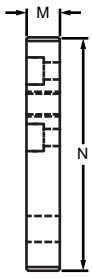

Part No.	Series	Color	A	B	C	D	E	F	G	H	J	K	L	M	N	Weight
2169	10	Clear	2.875"	1.500"	1.000"	.500"	2.000"	1.000"	.500"	1/4 SHCS	3/8-16	.390"	1.000"	.500"	3.500"	.308 lb
2169-Black	10	Black	2.875"	1.500"	1.000"	.500"	2.000"	1.000"	.500"	1/4 SHCS	3/8-16	.390"	1.000"	.500"	3.500"	.308 lb
2171	10	Clear	2.875"	1.500"	1.000"	.500"	2.000"	1.000"	.500"	1/4 SHCS	1/2-13	.390"	1.000"	.500"	3.500"	.305 lb
2171-Black	10	Black	2.875"	1.500"	1.000"	.500"	2.000"	1.000"	.500"	1/4 SHCS	1/2-13	.390"	1.000"	.500"	3.500"	.305 lb
2180	15	Clear	4.000"	2.250"	1.500"	.750"	3.000"	1.500"	.750"	5/16 SHCS	1/2-13	.531"	1.500"	.750"	4.500"	.921 lb
2180-Black	15	Black	4.000"	2.250"	1.500"	.750"	3.000"	1.500"	.750"	5/16 SHCS	1/2-13	.531"	1.500"	.750"	4.500"	.921 lb
40-2180	40	Clear	106.68mm	60.00mm	40.00mm	20.00mm	80.00mm	40.00mm	20.00mm	M8 SHCS	M12 x 1.75	13.50mm	40.00mm	19.00mm	120.00mm	.4557 kg
40-2180-Black	40	Black	106.68mm	60.00mm	40.00mm	20.00mm	80.00mm	40.00mm	20.00mm	M8 SHCS	M12 x 1.75	13.50mm	40.00mm	19.00mm	120.00mm	.4557 kg

Material Specifications

Material	Alloy*	Process	Finish
Aluminum	6105-T5	Milled	Anodize

* Or comparable

Required Machining Services

Machining Type	Machined	Reference Page
Tap Profile End	Mounting Profile	861

Suggested Hardware (Mount to T-Slot)

Part No.	Series	Qty.	Bolt	T-Nut
3491	10	4	1/4-20 x 1/2" SHCS	Economy
3458	15	4	5/16-18 x 7/8" SHCS	Economy
75-3430	40	4	M8 x 20mm SHCS	Economy

Suggested Hardware (Mount to Profile End)

Part No.	Series	Qty.	Bolt
3064	10	4	1/4-20 x 3/4" SHCS
3123	15	4	5/16-18 x 1.25" SHCS
13-8525	40	4	M8 x 25mm SHCS (Blue)

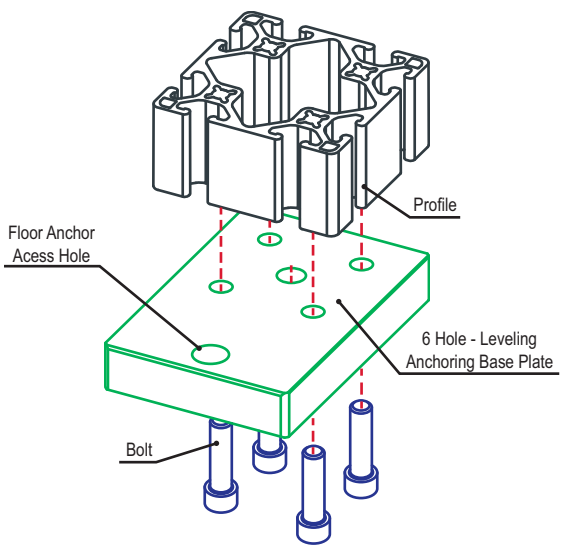

Floor Mount Base Plate

Part Description:

The floor mount base plate is made of anodized aluminum to withstand daily use and wear and tear. It has two upright plates that support the sides of the profile and enable vertical adjustments.The mount also has anchoring slots to bolt the frame to the floor; the slots allow lateral adjustments.

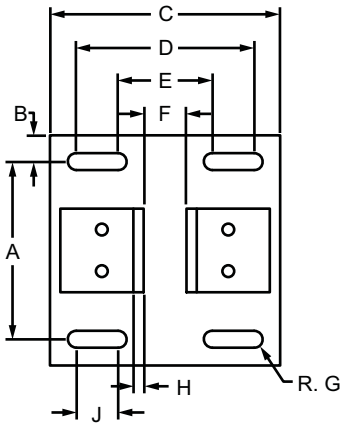

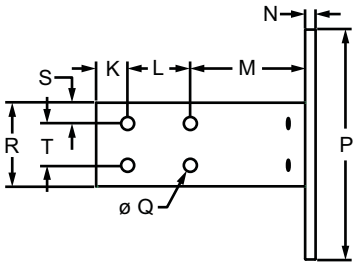

Part No.	Series	Color	A	B	C	D	E	F	G	H	J
2380	10	Clear	2.750"	.625"	5.500"	4.250"	2.250"	1.020"	.203"	.250"	1.000"
2380-Black	10	Black	2.750"	.625"	5.500"	4.250"	2.250"	1.020"	.203"	.250"	1.000"
2385	10	Clear	4.250"	.625"	5.500"	4.250"	2.250"	1.020"	.203"	.250"	1.000"
2385-Black	10	Black	4.250"	.625"	5.500"	4.250"	2.250"	1.020"	.203"	.250"	1.000"
2387	10	Clear	4.250"	.625"	6.500"	5.250"	3.250"	2.020"	.203"	.250"	1.000"
2387-Black	10	Black	4.250"	.625"	6.500"	5.250"	3.250"	2.020"	.203"	.250"	1.000"
2390	15	Clear	3.750"	.625"	6.000"	4.750"	2.750"	1.520"	.265"	.250"	1.000"
2390-Black	15	Black	3.750"	.625"	6.000"	4.750"	2.750"	1.520"	.265"	.250"	1.000"
2400	15	Clear	4.750"	.625"	6.500"	5.250"	3.250"	1.520"	.265"	.250"	1.000"
2400-Black	15	Black	4.750"	.625"	6.500"	5.250"	3.250"	1.520"	.265"	.250"	1.000"
2410	15	Clear	4.750"	.625"	8.000"	6.750"	4.750"	3.020"	.265"	.250"	1.000"
2410-Black	15	Black	4.750"	.625"	8.000"	6.750"	4.750"	3.020"	.265"	.250"	1.000"

		K	L	M	N	P	Q	R	S	T	Weight
2380	10	.750"	1.500"	2.750"	.250"	4.000"	.281"	1.000"	.500"	—	.869 lb
2380-Black	10	.750"	1.500"	2.750"	.250"	4.000"	.281"	1.000"	.500"	—	.869 lb
2385	10	.750"	1.500"	2.750"	.250"	5.500"	.281"	2.000"	.500"	1.000"	1.474 lb
2385-Black	10	.750"	1.500"	2.750"	.250"	5.500"	.281"	2.000"	.500"	1.000"	1.474 lb
2387	10	.750"	1.500"	2.750"	.250"	5.500"	.281"	2.000"	.500"	1.000"	1.606 lb
2387-Black	10	.750"	1.500"	2.750"	.250"	5.500"	.281"	2.000"	.500"	1.000"	1.606 lb
2390	15	.750"	1.500"	2.750"	.375"	5.000"	.328"	1.500"	.750"	—	1.584 lb
2390-Black	15	.750"	1.500"	2.750"	.375"	5.000"	.328"	1.500"	.750"	—	1.584 lb
2400	15	.750"	1.500"	2.750"	.375"	6.000"	.328"	3.000"	.750"	1.500"	2.489 lb
2400-Black	15	.750"	1.500"	2.750"	.375"	6.000"	.328"	3.000"	.750"	1.500"	2.489 lb
2410	15	.750"	1.500"	2.750"	.375"	6.000"	.328"	3.000"	.750"	1.500"	2.822 lb
2410-Black	15	.750"	1.500"	2.750"	.375"	6.000"	.328"	3.000"	.750"	1.500"	2.822 lb

CONTINUE

Floor Mount Base Plate (Continued)

Part No.	Series	Color	A	B	C	D	E	F	G	H	J
25-2380	25	Clear	70.00mm	15.00mm	160.00mm	130.00mm	70.00mm	25.20mm	6.50mm	6.00mm	30.00mm
25-2380-Black	25	Black	70.00mm	15.00mm	160.00mm	130.00mm	70.00mm	25.20mm	6.50mm	6.00mm	30.00mm
25-2385	25	Clear	110.00mm	15.00mm	160.00mm	130.00mm	70.00mm	25.20mm	6.50mm	6.00mm	30.00mm
25-2385-Black	25	Black	110.00mm	15.00mm	160.00mm	130.00mm	70.00mm	25.20mm	6.50mm	6.00mm	30.00mm
25-2387	25	Clear	110.00mm	15.00mm	182.00mm	152.00mm	92.00mm	50.40mm	6.50mm	6.00mm	30.00mm
25-2387-Black	25	Black	110.00mm	15.00mm	182.00mm	152.00mm	92.00mm	50.40mm	6.50mm	6.00mm	30.00mm
40-2390	40	Clear	110.00mm	15.00mm	160.00mm	130.00mm	70.00mm	40.40mm	6.75mm	6.00mm	30.00mm
40-2390-Black	40	Black	110.00mm	15.00mm	160.00mm	130.00mm	70.00mm	40.40mm	6.75mm	6.00mm	30.00mm
40-2400	40	Clear	130.00mm	15.00mm	160.00mm	130.00mm	70.00mm	40.40mm	6.75mm	6.00mm	30.00mm
40-2400-Black	40	Black	130.00mm	15.00mm	160.00mm	130.00mm	70.00mm	40.40mm	6.75mm	6.00mm	30.00mm
40-2410	40	Clear	130.00mm	15.00mm	200.00mm	170.00mm	110.00mm	80.40mm	6.75mm	6.00mm	30.00mm
40-2410-Black	40	Black	130.00mm	15.00mm	200.00mm	170.00mm	110.00mm	80.40mm	6.75mm	6.00mm	30.00mm

Part No.	Series	K	L	M	N	P	Q	R	S	T	Weight
25-2380	25	20.00mm	40.00mm	80.00mm	6.00mm	100.00mm	7.14mm	25.00mm	12.50mm	—	.4074 kg
25-2380-Black	25	20.00mm	40.00mm	80.00mm	6.00mm	100.00mm	7.14mm	25.00mm	12.50mm	—	.4074 kg
25-2385	25	20.00mm	40.00mm	80.00mm	6.00mm	140.00mm	7.14mm	50.00mm	12.50mm	25.00mm	.6977 kg
25-2385-Black	25	20.00mm	40.00mm	80.00mm	6.00mm	140.00mm	7.14mm	50.00mm	12.50mm	25.00mm	.6977 kg
25-2387	25	20.00mm	40.00mm	80.00mm	6.00mm	140.00mm	7.14mm	50.00mm	12.50mm	25.00mm	.7395 kg
25-2387-Black	25	20.00mm	40.00mm	80.00mm	6.00mm	140.00mm	7.14mm	50.00mm	12.50mm	25.00mm	.7395 kg
40-2390	40	20.00mm	40.00mm	80.00mm	9.00mm	140.00mm	8.33mm	40.00mm	20.00mm	—	.7951 kg
40-2390-Black	40	20.00mm	40.00mm	80.00mm	9.00mm	140.00mm	8.33mm	40.00mm	20.00mm	—	.7951 kg
40-2400	40	20.00mm	40.00mm	80.00mm	9.00mm	160.00mm	8.33mm	80.00mm	20.00mm	40.00mm	1.1653 kg
40-2400-Black	40	20.00mm	40.00mm	80.00mm	9.00mm	160.00mm	8.33mm	80.00mm	20.00mm	40.00mm	1.1653 kg
40-2410	40	20.00mm	40.00mm	80.00mm	9.00mm	160.00mm	8.33mm	80.00mm	20.00mm	40.00mm	1.3245 kg
40-2410-Black	40	20.00mm	40.00mm	80.00mm	9.00mm	160.00mm	8.33mm	80.00mm	20.00mm	40.00mm	1.3245 kg

Material Specifications

Material	Alloy*	Process	Finish
Aluminum	6105-T5	Milled	Anodize

* Or comparable

Suggested Hardware (Mount to T-Slot)

Part No.	Series	Qty.	Bolt Assembly
3321	10	4 TO 8	1/4-20 x 1/2" FBHSCS & Economy T-Nut
3325	15	4 TO 8	5/16-18 x 3/4" Economy T-Slot Stud w/ Washer & Hex Nut
3320	15	4 TO 8	5/16-18 x 11/16" FBHSCS & Economy T-Nut
75-3412	25	4 TO 8	M6 x 12mm SHCS & Economy T-Nut
75-3500	40	4 TO 8	M8 x 20mm Economy T-Slot Stud w/ Washer & Hex Nut
75-3422	40	4 TO 8	M8 x 16mm BHSCS & Economy T-Nut

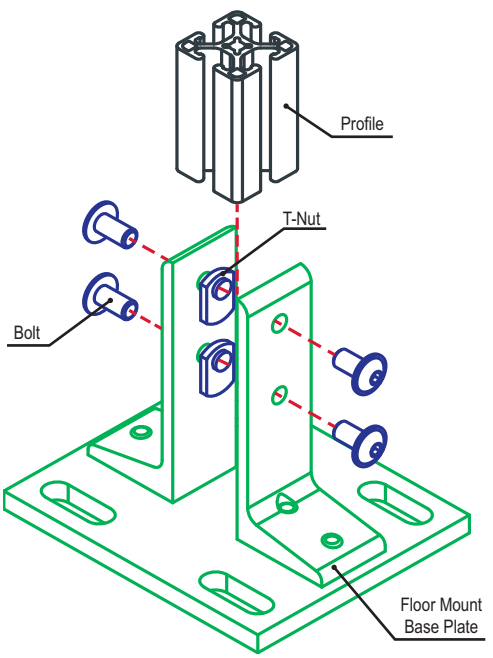

Economy Floor Mount Base Plate

Part Description:

The economy floor mount base plate is made of anodized aluminum to withstand daily use and wear and tear. It bolts directly to the T-slot to allow vertical adjustments and is designed with countersunk holes to incorporate floor anchors.

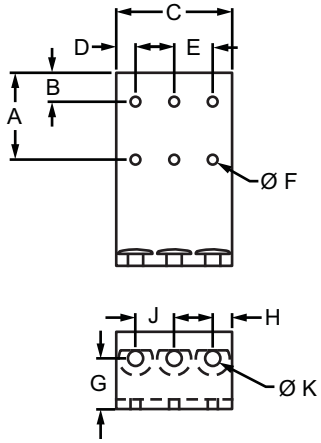

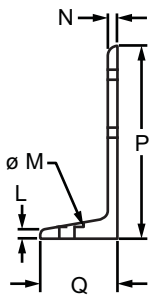

Part No.	Series	Color	A	B	C	D	E	F	G	H
2414	10	Clear	2.250"	.750"	1.000"	.500"	—	.257"	1.312"	.500"
2414-Black	10	Black	2.250"	.750"	1.000"	.500"	—	.257"	1.312"	.500"
2416	10	Clear	2.250"	.750"	2.000"	.500"	1.000"	.257"	1.312"	.500"
2416-Black	10	Black	2.250"	.750"	2.000"	.500"	1.000"	.257"	1.312"	.500"
2404	10	Clear	2.250"	.750"	3.000"	.500"	1.000"	.257"	1.312"	.500"
2404-Black	10	Black	2.250"	.750"	3.000"	.500"	1.000"	.257"	1.312"	.500"
2415	15	Clear	2.250"	.750"	1.500"	.750"	—	.328"	1.312"	.750"
2415-Black	15	Black	2.250"	.750"	1.500"	.750"	—	.328"	1.312"	.750"
2417	15	Clear	2.250"	.750"	3.000"	.750"	1.500"	.328"	1.312"	.750"
2417-Black	15	Black	2.250"	.750"	3.000"	.750"	1.500"	.328"	1.312"	.750"
2405	15	Clear	2.250"	.750"	4.500"	.750"	1.500"	.328"	1.312"	.750"
2405-Black	15	Black	2.250"	.750"	4.500"	.750"	1.500"	.328"	1.312"	.750"

Part No.	Series	Color	J	K	L	M	N	P	Q	Weight
2414	10	Clear	—	.390"	.312"	.875"	.250"	5.000"	2.000"	.178 lb
2414-Black	10	Black	—	.390"	.312"	.875"	.250"	5.000"	2.000"	.178 lb
2416	10	Clear	1.000"	.390"	.312"	.875"	.250"	5.000"	2.000"	.270 lb
2416-Black	10	Black	1.000"	.390"	.312"	.875"	.250"	5.000"	2.000"	.270 lb
2404	10	Clear	1.000"	.390"	.312"	.875"	.250"	5.000"	2.000"	.545 lb
2404-Black	10	Black	1.000"	.390"	.312"	.875"	.250"	5.000"	2.000"	.545 lb
2415	15	Clear	—	.531"	.312"	1.125"	.250"	5.000"	2.000"	.263 lb
2415-Black	15	Black	—	.531"	.312"	1.125"	.250"	5.000"	2.000"	.263 lb
2417	15	Clear	1.500"	.531"	.312"	1.125"	.250"	5.000"	2.000"	.545 lb
2417-Black	15	Black	1.500"	.531"	.312"	1.125"	.250"	5.000"	2.000"	.545 lb
2405	15	Clear	1.500"	.531"	.312"	1.125"	.250"	5.000"	2.000"	.785 lb
2405-Black	15	Black	1.500"	.531"	.312"	1.125"	.250"	5.000"	2.000"	.785 lb

CONTINUE

Economy Floor Mount Base Plate (Continued)

Part No.	Series	Color	A	B	C	D	E	F	G	H
25-2414	25	Clear	60.00mm	20.00mm	25.00mm	12.50mm	—	6.30mm	36.00mm	12.50mm
25-2414-Black	25	Black	60.00mm	20.00mm	25.00mm	12.50mm	—	6.30mm	36.00mm	12.50mm
25-2416	25	Clear	60.00mm	20.00mm	50.00mm	12.50mm	25.00mm	6.30mm	36.00mm	12.50mm
25-2416-Black	25	Black	60.00mm	20.00mm	50.00mm	12.50mm	25.00mm	6.30mm	36.00mm	12.50mm
40-2415	40	Clear	60.00mm	20.00mm	40.00mm	20.00mm	—	8.33mm	36.00mm	20.00mm
40-2415-Black	40	Black	60.00mm	20.00mm	40.00mm	20.00mm	—	8.33mm	36.00mm	20.00mm
40-2417	40	Clear	60.00mm	20.00mm	80.00mm	20.00mm	40.00mm	8.33mm	36.00mm	20.00mm
40-2417-Black	40	Black	60.00mm	20.00mm	80.00mm	20.00mm	40.00mm	8.33mm	36.00mm	20.00mm

Part No.	Series	Color	J	K	L	M	N	P	Q	Weight
25-2414	25	Clear	—	10.49mm	8.00mm	22.00mm	6.00mm	140.00mm	50.00mm	.0846 kg
25-2414-Black	25	Black	—	10.49mm	8.00mm	22.00mm	6.00mm	140.00mm	50.00mm	.0846 kg
25-2416	25	Clear	25.00mm	10.49mm	8.00mm	22.00mm	6.00mm	140.00mm	56.00mm	.1679 kg
25-2416-Black	25	Black	25.00mm	10.49mm	8.00mm	22.00mm	6.00mm	140.00mm	56.00mm	.1679 kg
40-2415	40	Clear	—	13.49mm	8.00mm	28.00mm	6.00mm	140.00mm	56.00mm	.1406 kg
40-2415-Black	40	Black	—	13.49mm	8.00mm	28.00mm	6.00mm	140.00mm	56.00mm	.1406 kg
40-2417	40	Clear	40.00mm	13.49mm	8.00mm	28.00mm	6.00mm	140.00mm	56.00mm	.2680 kg
40-2417-Black	40	Black	40.00mm	13.49mm	8.00mm	28.00mm	6.00mm	140.00mm	56.00mm	.2680 kg

Material Specifications

Material	Alloy*	Process	Finish
Aluminum	6105-T5	Milled	Anodize

* Or comparable

Suggested Hardware (Mount to T-Slot)

Part No.	Series	Qty.	Bolt Assembly
3321	10	2 TO 6	1/4-20 x 1/2" FBHSCS & Economy T-Nut
3325	15	2 TO 6	5/16-18 x 3/4" Economy T-Slot Stud w/ Washer & Hex Nut
3320	15	2 TO 6	5/16-18 x 11/16" FBHSCS & Economy T-Nut
75-3412	25	2 TO 6	M6 x 12mm SHCS & Economy T-Nut
75-3500	40	2 TO 6	M8 x 20mm Economy T-Slot Stud w/ Washer & Hex Nut
75-3422	40	2 TO 6	M8 x 16mm BHSCS & Economy T-Nut

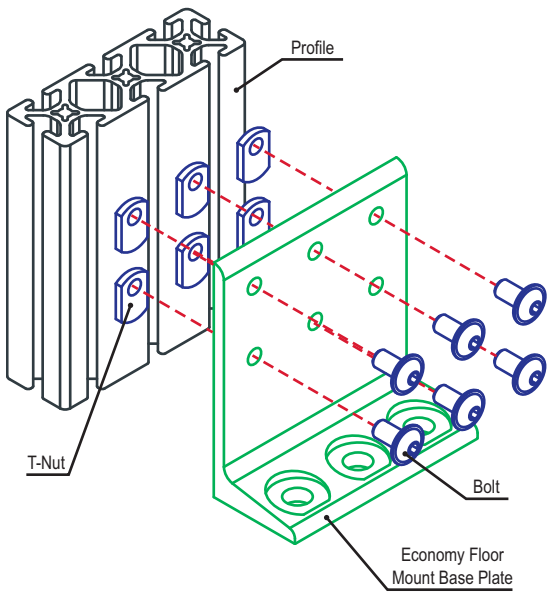

Slotted Economy Floor Mount Base Plate

Part Description:

The slotted economy floor mount base plate is available in clear or black anodized aluminum to withstand daily use and wear and tear. It has slotted holes to assist with positioning and adjustments, making it a common choice for use with Ready Tube®. The base plate is designed with a countersunk hole to incorporate floor anchors.

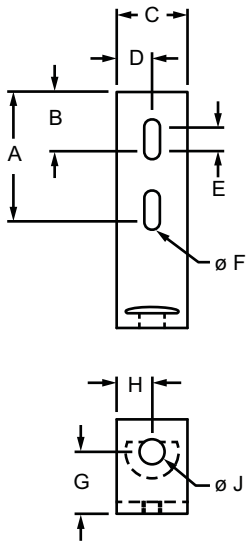

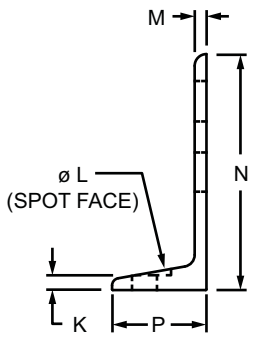

Part No.	Series	Color	A	B	C	D	E	F	G
2413	15 RT	Clear	2.750"	1.250"	1.500"	.750"	.500"	.328"	1.312"
2413-Black	15 RT	Black	2.750"	1.250"	1.500"	.750"	.500"	.328"	1.312"

Part No.	Series	H	J	K	L	M	N	P	Weight
2413	15 RT	.750"	.530"	.312"	1.125"	.250"	5.000"	2.000"	.255 lb
2413-Black	15 RT	.750"	.530"	.312"	1.125"	.250"	5.000"	2.000"	.255 lb

Material Specifications

Material	Alloy*	Process	Finish
Aluminum	6105-T5	Milled	Anodize

* Or comparable

Suggested Hardware (Mount to T-Slot)

Part No.	Series	Qty.	Bolt	T-Nut
3320	15	2	5/16-18 x .687" FBHSCS	Economy
3960	RT	2	5/16-18 x 2.000" Flanged Hex Head Bolt	Flanged Hex Nut

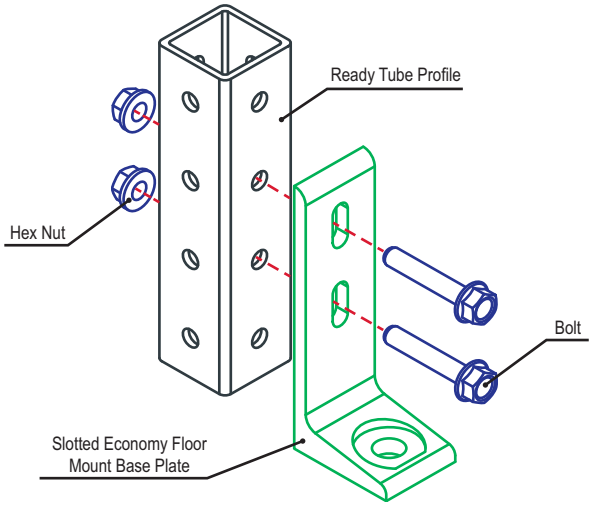

Part Description:

The 3 hole – die-cast center tap base plate has a black powder coat finish. It mounts leveling feet and threaded stem casters, and is commonly used on a rectangular profile end to center mount the foot or caster. This base plate can also be used on a profile side. It requires a tap (page 861) to mount to a profile end. **Additional Information:** When using an M12 socket head cap screw (SHCS) the base plate can only be mounted to the profile end.

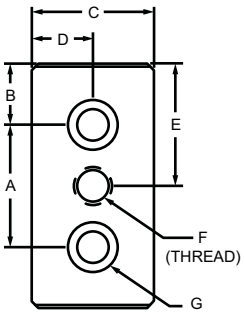

Part No.	Series	Color	A	B	C	D	E	F	G	H	J	Weight
14021	30	Black	30.00mm	15.00mm	30.00mm	15.00mm	30.00mm	M8 x 1.25	M8 SHCS	12.00mm	60.00mm	.2100 kg
14023	30		30.00mm	15.00mm	30.00mm	15.00mm	30.00mm	M10 x 1.50	M8 SHCS	12.00mm	60.00mm	.2030 kg
14025	30		30.00mm	15.00mm	30.00mm	15.00mm	30.00mm	M12 x 1.75	M8 SHCS	12.00mm	60.00mm	.2000 kg
14027	45		45.00mm	22.50mm	45.00mm	22.50mm	45.00mm	M10 x 1.50	M8 SHCS	16.00mm	90.00mm	.2803 kg
14028	45		45.00mm	22.50mm	45.00mm	22.50mm	45.00mm	M10 x 1.50	M12 SHCS	16.00mm	90.00mm	.2521 kg
14029	45		45.00mm	22.50mm	45.00mm	22.50mm	45.00mm	M12 x 1.75	M8 SHCS	16.00mm	90.00mm	.6160 kg
14030	45		45.00mm	22.50mm	45.00mm	22.50mm	45.00mm	M12 x 1.75	M12 SHCS	16.00mm	90.00mm	.5570 kg
14032	45		45.00mm	22.50mm	45.00mm	22.50mm	45.00mm	M16 x 2.0	M12 SHCS	16.00mm	90.00mm	.5390 kg

Material Specifications

Material	Grade	Process	Finish
Zinc	GD-ZnAlCU1	Die Cast	Powder Coat

Required Machining Services

Machining Type	Machined	Reference Page
Tap Profile End	Mount to Profile End	861

Suggested Hardware (Mount to T-Slot)

Series	Qty.	Part No.	Bolt	Qty.	Part No.	T-Nut
30	2	11-8512	M8 x 12mm SHCS	2	13095	Roll-in
45	2	11-8520	M8 x 20mm SHCS	2	13132	Drop-in

Suggested Hardware (Mount to Profile End)

Part No.	Series	Qty.	Bolt
11-8520	30	2	M8 x 20mm SHCS
11-2525	45	2	M12 x 25mm LHSCS

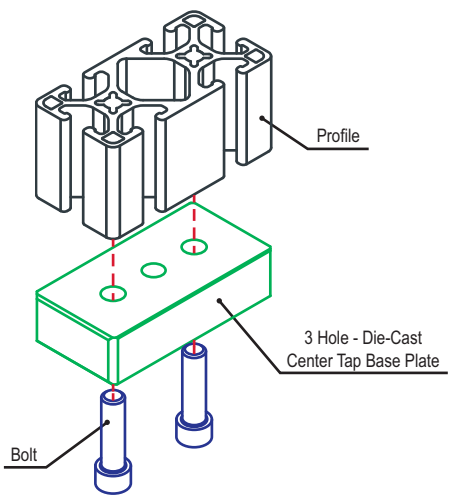

5 Hole - Die-Cast Center Tap Base Plate

Part Description:

The 5 hole – die-cast center tap base plate has a black powder coat finish. It mounts leveling feet and threaded stem casters, and is commonly used on profiles with eight slots to center mount the foot or caster. This base plate can also be used on a profile side. It requires a tap (page 861) to mount to a profile end. **Additional Information:** When using an M12 socket head cap screw (SHCS) the base plate can only be mounted to the profile end.

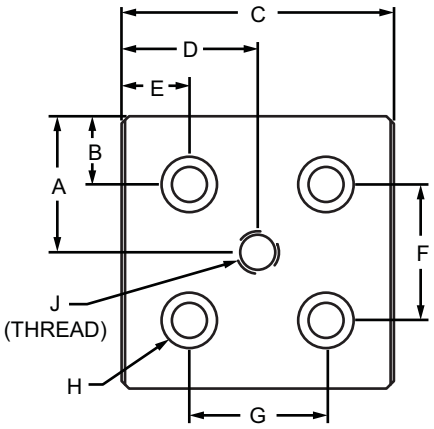

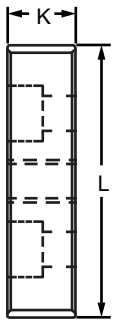

Part No.	Series	Color	A	B	C	D	E	F	G	H	J	K	L	Weight
14035	30	Black	30.00mm	15.00mm	60.00mm	30.00mm	15.00mm	30.00mm	30.00mm	M8 SHCS	M8 x 1.25	12.00mm	60.00mm	.3710 kg
14037	30		30.00mm	15.00mm	60.00mm	30.00mm	15.00mm	30.00mm	30.00mm	M8 SHCS	M10 x 1.50	12.00mm	60.00mm	.3520 kg
14039	30		30.00mm	15.00mm	60.00mm	30.00mm	15.00mm	30.00mm	30.00mm	M8 SHCS	M12 x 1.75	12.00mm	60.00mm	.3470 kg
14041	30		30.00mm	15.00mm	60.00mm	30.00mm	15.00mm	30.00mm	30.00mm	M8 SHCS	M16 x 2.0	12.00mm	60.00mm	.3390 kg
14043	45		45.00mm	22.50mm	90.00mm	45.00mm	22.50mm	45.00mm	45.00mm	M12 SHCS	M10 x 1.50	16.00mm	90.00mm	1.0680 kg
14045	45		45.00mm	22.50mm	90.00mm	45.00mm	22.50mm	45.00mm	45.00mm	M12 SHCS	M12 x 1.75	16.00mm	90.00mm	1.0680 kg
14047	45		45.00mm	22.50mm	90.00mm	45.00mm	22.50mm	45.00mm	45.00mm	M12 SHCS	M16 x 2.0	16.00mm	90.00mm	1.0380 kg

Material Specifications

Material	Grade	Process	Finish
Zinc	GD-ZnAlCU1	Die Cast	Powder Coat

Required Machining Services

Machining Type	Machined	Reference Page
Tap Profile End	Mount to Profile End	861

Suggested Hardware (Mount to T-Slot)

Part No.	Series	Qty.	Bolt	T-Nut
75-3595	30	4	M6 x 16mm SHCS	Drop-in

Suggested Hardware (Mount to Profile End)

Part No.	Series	Qty.	Bolt
11-8518	30	4	M8 x 18mm SHCS
11-2525	45	4	M12 x 25mm LHSCS

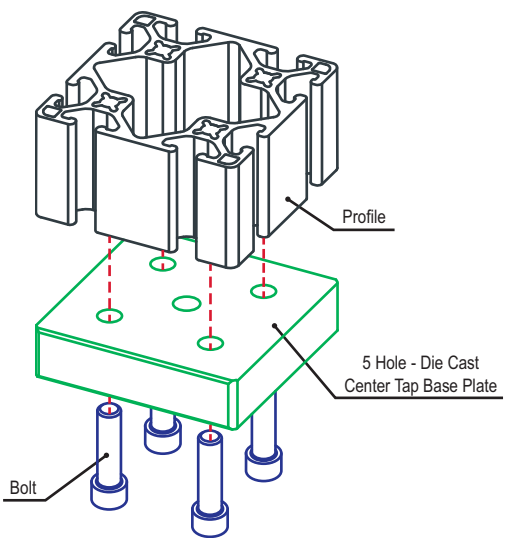

Pictorial Table Of Contents

Linear Bearing Concept
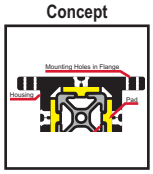

Page 660

Bearing Pad Types
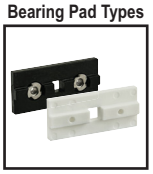
Page 660

UniBearings™
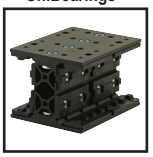
Page 661

Introduction to Axial Motion
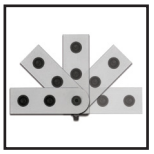
Page 711

Dynamic Pivot Components

Page 711

Introduction to Pressure Manifolds

Page 751

Introduction to Stanchions
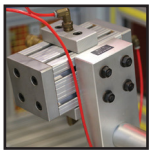
Page 767

Linear Motion

3 Slot Mount - Single Flange Short Standard Linear Bearing

Page 662

3 Slot Mount - Single Flange Long Standard Linear Bearing

Page 664

3 Slot Mount - Double Flange Short Standard Linear Bearing

Page 666

3 Slot Mount - Double Flange Long Standard Linear Bearing

Page 668

4 Slot Mount - Double Flange Short Standard Linear Bearing

Page 670

4 Slot Mount - Double Flange Long Standard Linear Bearing

Page 672

3 Slot Mount - Single Flange Short High-Cycle Linear Bearing

Page 674

3 Slot Mount - Single Flange Long High-Cycle Linear Bearing

Page 676

3 Slot Mount - Double Flange Short High-Cycle Linear Bearing

Page 678

3 Slot Mount - Double Flange Long High-Cycle Linear Bearing

Page 680

4 Slot Mount - Double Flange Short High-Cycle Linear Bearing

Page 682

4 Slot Mount - Double Flange Long High-Cycle Linear Bearing

Page 684

Single Short UniBearing™

Page 686

Single Long UniBearing™

Page 687

Double Short UniBearing™

Page 688

Double Long UniBearing™

Page 689

Short - Single Mount Unibearing™ Assy.

Page 690

Long - Single Mount Unibearing™ Assy.

Page 691

Short - Double Mount Unibearing™ Assy.
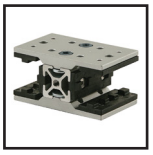
Page 692

Long - Double Mount Unibearing™ Assy.

Page 693

CONTINUE

Pictorial Table Of Contents

Linear Bearing Pads, Shims, Brakes

Single-Keyed Standard Linear Bearing Pad

Page 698

Single-Keyed High-Cycle Linear Bearing Pad

Page 699

T-Slot Insert Linear Bearing Pad

Page 700

Single-Keyed UniBearing™ Pad

Page 701

Double-Keyed UniBearing™ Pad

Page 702

Single-Keyed Standard Bearing Pad Profile

Page 703

Double-Keyed Standard Bearing Pad Profile

Page 704

Linear Bearing Shim Stock

Page 705

"L" Handle Linear Bearing Brake Kit

Page 706

"T" Handle Linear Bearing Brake Kit

Page 707

Hex Nut Linear Bearing Brake Kit

Page 708

Wing Nut Linear Bearing Brake Kit

Page 709

Star Handle Linear Bearing Brake Kit

Page 710

Dynamic Pivots

0 Degree Dynamic Pivot Nub

Page 712

90 Degree Dynamic Pivot Nub

Page 713

Universal Dynamic Pivot Nub

Page 714

0 Degree Dynamic Right Angle Pivot Nub

Page 715

90 Degree Dynamic Right Angle Pivot Nub

Page 716

Universal Dynamic Right Angle Pivot Nub

Page 717

"L" Dynamic Pivot Arm

Page 718

Standard Straight Dynamic Pivot Arm

Page 719

Standard 0 Degree Dynamic Pivot Assy. with Dual Straight Arms

Page 720

Standard 90 Degree Dynamic Pivot Assy. with Dual Straight Arms

Page 721

Standard Universal Dynamic Pivot Assy. with Dual Straight Arms

Page 722

Standard 0 Degree Dynamic Pivot Assy. with Dual "L" Arms

Page 723

Standard 90 Degree Dynamic Pivot Assy. with Dual "L" Arms

Page 724

Standard Universal Dynamic Pivot Assy. with Dual "L" Arms

Page 725

CONTINUE

Pictorial Table Of Contents

Standard 0 Degree Dynamic Pivot Assy. with Straight and "L" Arm

Page 726

Standard 90 Degree Dynamic Pivot Assy. with Straight and "L" Arm

Page 727

Standard Universal Dynamic Pivot Assy. with Straight and "L" Arm

Page 728

Right Angle 0 Degree Dynamic Pivot Assy. with Dual Straight Arms

Page 729

Right Angle 90 Degree Dynamic Pivot Assy. with Dual Straight Arms

Page 730

Right Angle Universal Dynamic Pivot Assy. with Dual Straight Arms

Page 731

Right Angle 0 Degree Dynamic Pivot Assy. with Dual "L" Arms

Page 732

Right Angle 90 Degree Dynamic Pivot Assy. with Dual "L" Arms

Page 733

Right Angle Universal Dynamic Pivot Assy. with Dual "L" Arms

Page 734

90 Degree Left Hand Pivot Bracket Plate

Page 735

90 Degree Right Hand Pivot Bracket Plate

Page 736

90 Degree Left Hand Pivot Bracket Assy. with "L" Handle

Page 737

90 Degree Left Hand Pivot Bracket Assy. with "T" Handle

Page 738

90 Degree Right Hand Pivot Bracket Assy. with "L" Handle

Page 739

90 Degree Right Hand Pivot Bracket Assy. with "T" Handle

Page 740

90 Degree Double Pivot Bracket Assy. with "L" Handles

Page 741

90 Degree Double Pivot Bracket Assy. with "T" Handles

Page 742

90 Degree Wide Double Pivot Bracket Assy. with "L" Handles

Page 743

90 Degree Wide Double Pivot Bracket Assy. with "T" Handles

Page 744

180 Degree Pivot Bracket

Page 745

180 Degree Right Hand Pivot Bracket Assy. with "L" Handle

Page 746

180 Degree Double Pivot Bracket Assy. with "L" Handles

Page 747

180 Degree Wide Double Pivot Bracket Assy. with "L" Handles

Page 748

"L" Handle Kit - Dynamic Pivot

Page 749

"T" Handle Kit - Dynamic Pivot

Page 750

CONTINUE

Pictorial Table Of Contents

Manifolds and Gravity Rollers

3-Hole Pressure Manifold Feed Plate

Page 752

3-Hole Gasket for Pressure Manifold

Page 752

2-Hole Pressure Manifold Stopper Plate

Page 753

5-Hole Square Pressure Manifold Feed Plate

Page 754

5-Hole Square Gasket for Pressure Manifold

Page 754

4-Hole Pressure Manifold Stopper Plate

Page 755

5-Hole Rectangular Pressure Manifold Feed Plate

Page 756

5-Hole Rectangular Gasket for Pressure Manifold

Page 756

3-Hole Pressure Manifold Stopper Plate

Page 757

12-Hole Pressure Manifold Feed Plate

Page 758

12-Hole Gasket for Pressure Manifold

Page 758

8-Hole Pressure Manifold Stopper Plate

Page 759

Pressure Manifold Access Plate

Page 760

Pressure Manifold Tap Ready Access Plate

Page 761

Gravity Roller

Page 762

Gravity Roller Mounting Block

Page 763

Connector Rod

Page 764

Connector Rod Profile

Page 764

P-Tube Stopper

Page 765

Stanchions

Single Shaft Stanchion Base

Page 768

Double Shaft Stanchion Base

Page 769

Single Shaft Blank Stanchion Mounting Plate

Page 770

Single Shaft Pre-Drilled Stanchion Mounting Plate

Page 771

Double Shaft Blank Stanchion Mounting Plate

Page 772

Stanchion Cross Clamp

Page 773

Single Shaft Stanchion Mounting Block

Page 774

Double Shaft Stanchion Mounting Block

Page 777

Narrow Horizontal Stanchion Base

Page 778

Wide Horizontal Stanchion Base

Page 779

Horizontal Stanchion Quick Clamp

Page 780

Quick Stanchion Cross Clamp

Page 781

Stanchion Clamp Handle

Page 782

Visit the Channel at youtube.com/8020inc

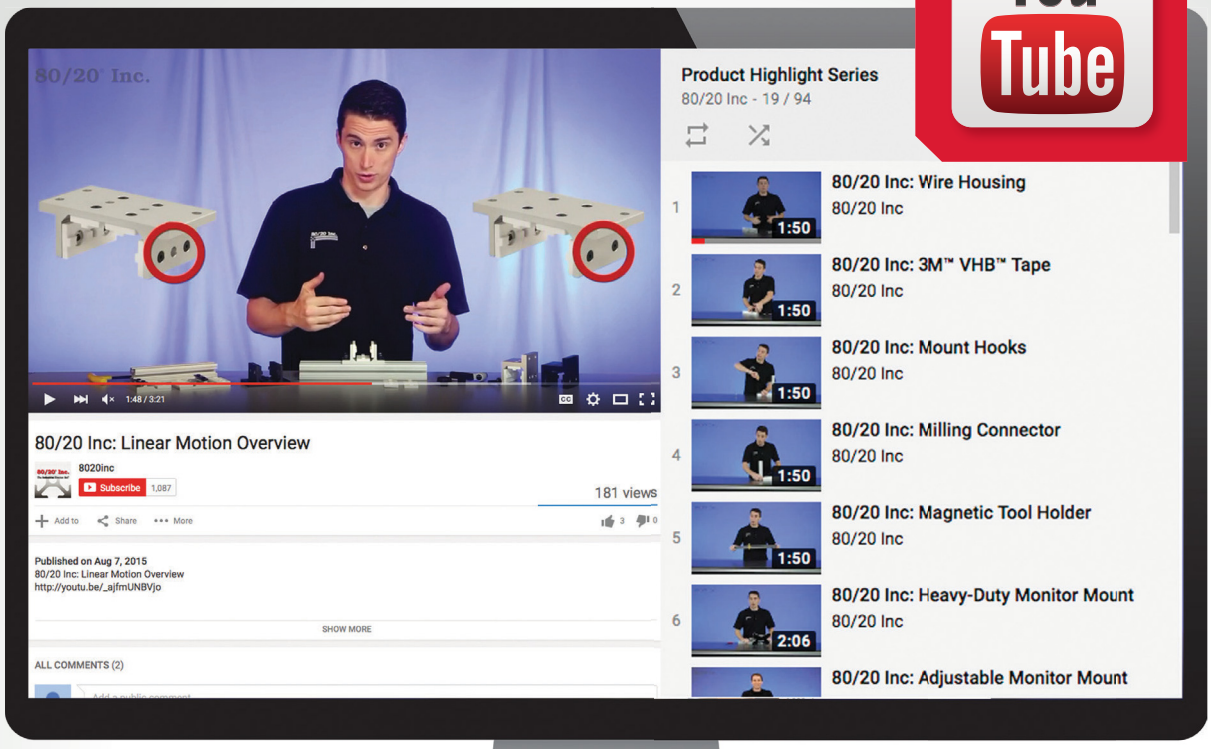

80/20 CHANNEL

FIND ALL THE LATEST VIDEOS HERE FIRST

Learn more about 80/20 by browsing through the library of videos on our YouTube Channel. See how products come together and are used in our Product Highlights Series. Get helpful Tips & Tricks when building with 80/20. See the latest build in the Xtreme DIY® Series. Find out more about all the Services 80/20 offers.

- Product Highlights
- Tips & Tricks
- Xtreme DIY® Series
- Services

Subscribe Get All the latest videos from 80/20's Channel

Linear Bearing Concept

Linear bearings enable you to add repeated motion and movement to your project. As an example, linear bearings are commonly found in material transportation applications such as picking tools.

The core concept is that profiles act as guiderails and pads are inserted into the T-slot to enable movement. Pads are available in two options: standard or high-cycle.

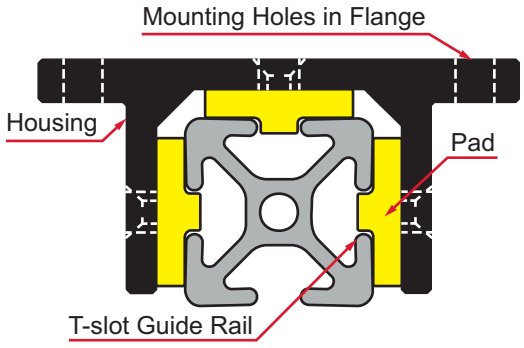

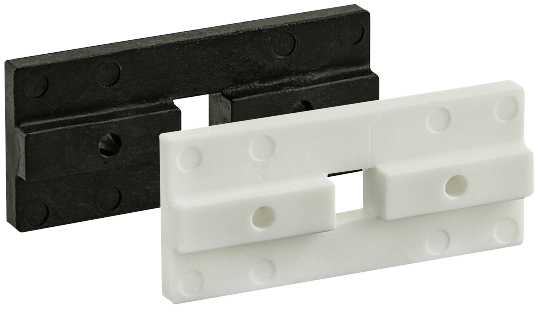

Standard Pad

Perfect for solutions such as drawer glides, table saw fences, ergonomic workstations or adjustable stands. All pads are available in white and black styles.

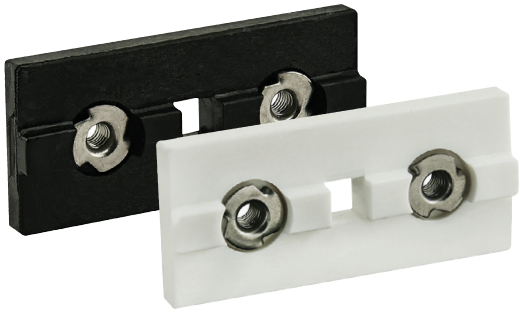

High-Cycle Pad

These bearings have a special threaded insert designed for sudden acceleration and deceleration without deteriorating. This durable pad lends itself to actuators and parts-transfer equipment.

Linear Bearing Shims

Linear bearing shim stock is used to create a precise fit. Each shim is .005 inches (.127mm) thick and has a slotted design that enables easy installation without having to dismantle the bearing; simply loosen the bearing pad and slide the shim(s) between the pad and housing while the bearing is still in place. Shims are sold in packs of 10 and are compatible with all 80/20 bearings.

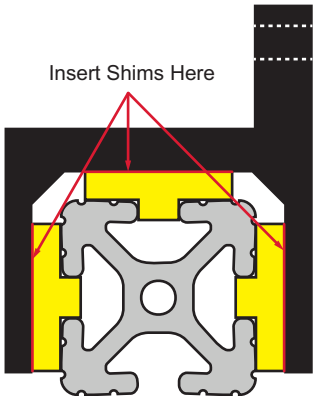

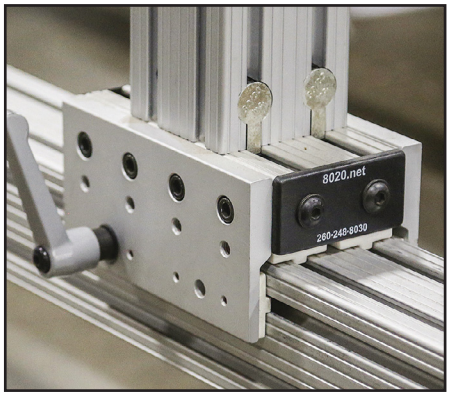

UniBearing™ Concept

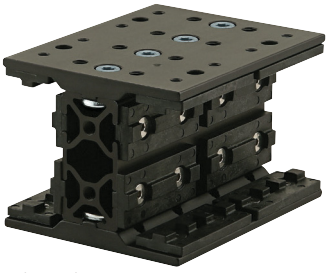

80/20 offers a custom UniBearing™. It differs from the traditional linear bearing in that it is adjustable for a range of profiles and can be installed even when a T-slot profile is captivated.

These are easily integrated into existing structures and are commonly used in applications such as automation equipment or guards that require frequent movement.

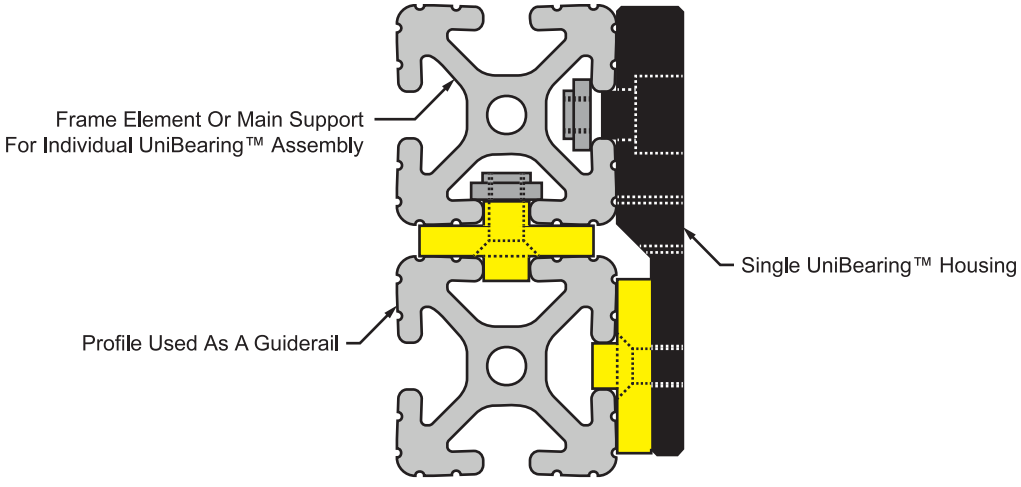

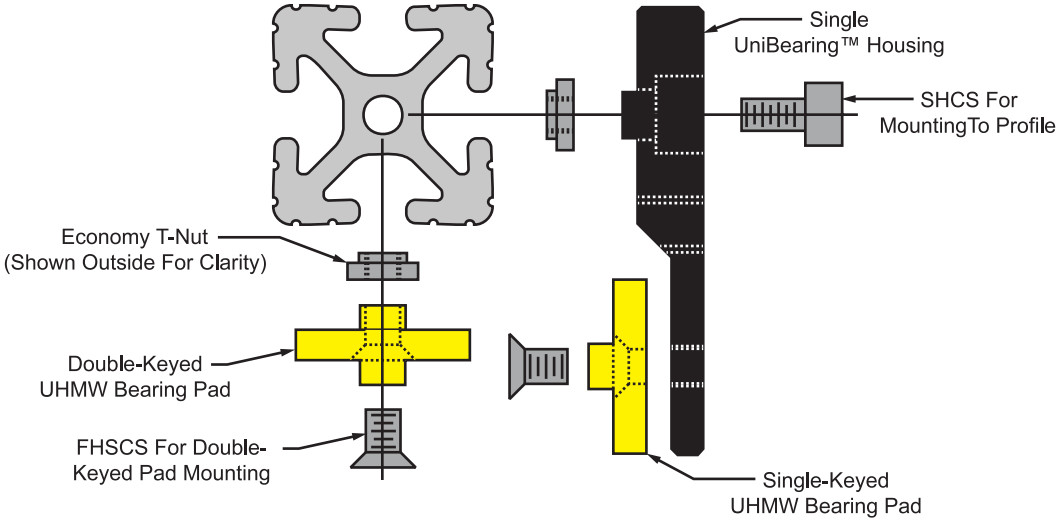

3 Slot Mount - Single Flange Short Standard Linear Bearing

Part Description:

The 3 slot mount – single flange short standard linear bearing with or without brake holes is typically used in linear motion applications. It houses profiles with a minimum of three open T-slots, has a single flange and is a shorter option. The bearing includes pads, screws and shims; the pads are made of self-lubricating UHMW. All 80/20 bearings are designed for compression loads only and not intended to support hanging loads.

Fractional

Metric

Black Anodized

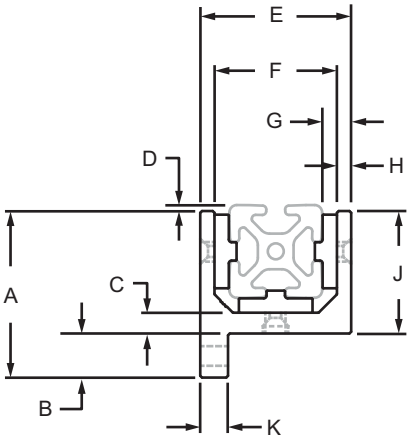

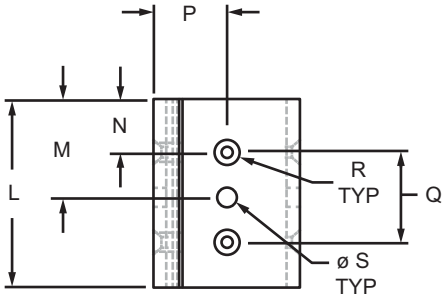

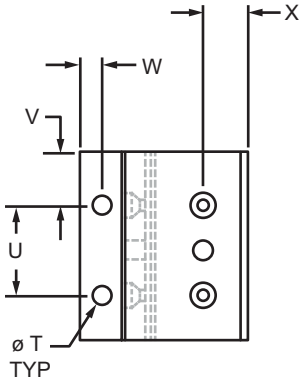

CONTINUE

3 Slot Mount - Single Flange Short Standard Linear Bearing

Part No.	Series	Color	A	B	C	D	E	F	G	H	J	K	L
6715	10	Clear	1.968"	.656"	.250"	.094"	1.624"	1.312"	.306"	.156"	1.312"	.311"	1.875"
6715-Black	10	Black	1.968"	.656"	.250"	.094"	1.624"	1.312"	.306"	.156"	1.312"	.311"	1.875"
6815	15	Clear	2.750"	.750"	.375"	.125"	2.505"	2.005"	.493"	.250"	2.000"	.500"	2.812"
6815-Black	15	Black	2.750"	.750"	.375"	.125"	2.505"	2.005"	.493"	.250"	2.000"	.500"	2.812"
25-6715	25	Clear	49.73mm	16.48mm	5.99mm	1.80mm	41.12mm	33.15mm	7.80mm	3.99mm	33.25mm	7.98mm	47.00mm
25-6715-Black	25	Black	49.73mm	16.48mm	5.99mm	1.80mm	41.12mm	33.15mm	7.80mm	3.99mm	33.25mm	7.98mm	47.00mm
40-6815	40	Clear	71.83mm	19.00mm	8.99mm	2.58mm	65.13mm	52.83mm	12.32mm	6.15mm	52.83mm	11.99mm	75.00mm
40-6815-Black	40	Black	71.83mm	19.00mm	8.99mm	2.58mm	65.13mm	52.83mm	12.32mm	6.15mm	52.83mm	11.99mm	75.00mm

Part No.	Series	M	N	P	Q	R	S	T	U	V	W	X	Weight
6715	10	—	.438"	.812"	1.000"	#8 FHS	—	.257"	1.000"	.438"	.343"	.406"	.198 lb
6715-Black	10		.438"	.812"	1.000"	#8 FHS		.257"	1.000"	.438"	.343"	.406"	.198 lb
6815	15		.656"	1.253"	1.500"	#10 FHS		.328"	1.500"	.656"	.375"	.625"	.688 lb
6815-Black	15		.656"	1.253"	1.500"	#10 FHS		.328"	1.500"	.656"	.375"	.625"	.688 lb
25-6715	25		11.00mm	20.56mm	25.00mm	#8 FHS		6.30mm	25.00mm	11.00mm	8.23mm	10.69mm	.0866 kg
25-6715-Black	25		11.00mm	20.56mm	25.00mm	#8 FHS		6.30mm	25.00mm	11.00mm	8.23mm	10.69mm	.0866 kg
40-6815	40		17.50mm	32.56mm	40.00mm	#10 FHS		8.33mm	40.00mm	17.50mm	9.53mm	17.42mm	.3262 kg
40-6815-Black	40		17.50mm	32.56mm	40.00mm	#10 FHS		8.33mm	40.00mm	17.50mm	9.53mm	17.42mm	.3262 kg

3 Slot Mount - Single Flange Short Standard Linear Bearing with Brake Holes

Part No.	Series	Color	A	B	C	D	E	F	G	H	J	K	L
6415	10	Clear	1.968"	.656"	.250"	.094"	1.624"	1.312"	.306"	.156"	1.312"	.311"	1.875"
6415-Black	10	Black	1.968"	.656"	.250"	.094"	1.624"	1.312"	.306"	.156"	1.312"	.311"	1.875"
6515	15	Clear	2.750"	.750"	.375"	.125"	2.505"	2.005"	.493"	.250"	2.000"	.500"	2.812"
6515-Black	15	Black	2.750"	.750"	.375"	.125"	2.505"	2.005"	.493"	.250"	2.000"	.500"	2.812"
25-6415	25	Clear	49.73mm	16.48mm	5.99mm	1.80mm	41.12mm	33.15mm	7.80mm	3.99mm	33.25mm	7.98mm	47.00mm
25-6415-Black	25	Black	49.73mm	16.48mm	5.99mm	1.80mm	41.12mm	33.15mm	7.80mm	3.99mm	33.25mm	7.98mm	47.00mm
40-6515	40	Clear	71.83mm	19.00mm	8.99mm	2.58mm	65.13mm	52.83mm	12.32mm	6.15mm	52.83mm	11.99mm	75.00mm
40-6515-Black	40	Black	71.83mm	19.00mm	8.99mm	2.58mm	65.13mm	52.83mm	12.32mm	6.15mm	52.83mm	11.99mm	75.00mm

Part No.	Series	M	N	P	Q	R	S	T	U	V	W	X	Weight
6415	10	.938"	.438"	.812"	1.000"	#8 FHS	.265"	.257"	1.000"	.438"	.343"	.406"	.196 lb
6415-Black	10	.938"	.438"	.812"	1.000"	#8 FHS	.265"	.257"	1.000"	.438"	.343"	.406"	.196 lb
6515	15	1.406"	.656"	1.253"	1.500"	#10 FHS	.344"	.328"	1.500"	.656"	.375"	.625"	.679 lb
6515-Black	15	1.406"	.656"	1.253"	1.500"	#10 FHS	.344"	.328"	1.500"	.656"	.375"	.625"	.679 lb
25-6415	25	23.50mm	11.00mm	20.56mm	25.00mm	#8 FHS	6.53mm	6.30mm	25.00mm	11.00mm	8.23mm	10.69mm	.0857 kg
25-6415-Black	25	23.50mm	11.00mm	20.56mm	25.00mm	#8 FHS	6.53mm	6.30mm	25.00mm	11.00mm	8.23mm	10.69mm	.0857 kg
40-6515	40	37.50mm	17.50mm	32.56mm	40.00mm	#10 FHS	8.71mm	8.33mm	40.00mm	17.50mm	9.53mm	17.42mm	.3253 kg
40-6515-Black	40	37.50mm	17.50mm	32.56mm	40.00mm	#10 FHS	8.71mm	8.33mm	40.00mm	17.50mm	9.53mm	17.42mm	.3253 kg

Material Specifications

Material	Alloy*	Process	Finish
Aluminum	6105-T5	Extrude	Anodize

* Or comparable

3 Slot Mount - Single Flange Long Standard Linear Bearing

Part Description:

The 3 slot mount – single flange long standard linear bearing with or without brake holes is typically used in linear motion applications. It houses profiles with a minimum of three open T-slots, has a single flange and is a longer option. The bearing includes pads, screws and shims; the pads are made of self-lubricating UHMW. All 80/20 bearings are designed for compression loads only and not intended to support hanging loads.

Fractional

Metric

Black Anodized

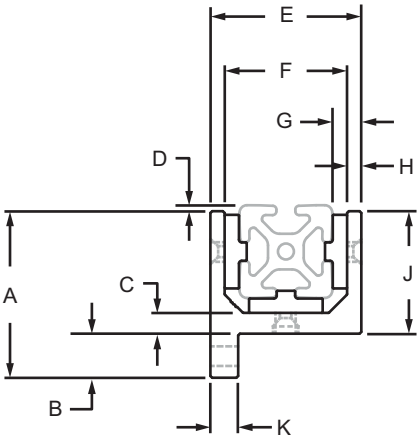

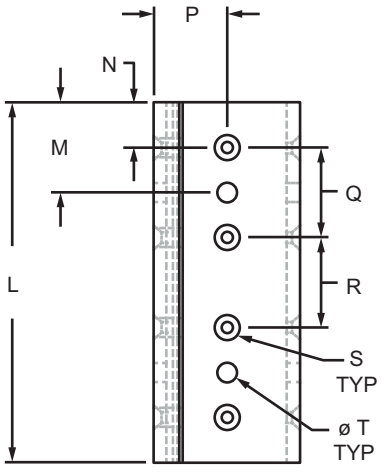

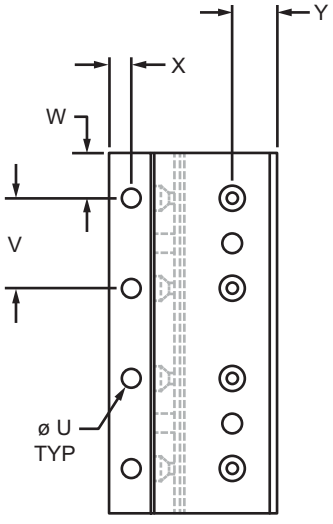

CONTINUE

3 Slot Mount - Single Flange Long Standard Linear Bearing

Part No.	Series	Color	A	B	C	D	E	F	G	H	J	K	L	M
6716	10	Clear	1.968"	.656"	.250"	.094"	1.624"	1.312"	.306"	.156"	1.312"	.311"	4.000"	—
6716-Black	10	Black	1.968"	.656"	.250"	.094"	1.624"	1.312"	.306"	.156"	1.312"	.311"	4.000"	
6816	15	Clear	2.750"	.750"	.375"	.125"	2.505"	2.005"	.493"	.250"	2.000"	.500"	6.000"	
6816-Black	15	Black	2.750"	.750"	.375"	.125"	2.505"	2.005"	.493"	.250"	2.000"	.500"	6.000"	
25-6716	25	Clear	49.73mm	16.48mm	5.99mm	1.80mm	41.12mm	33.15mm	7.80mm	3.99mm	33.25mm	7.98mm	100.00mm	
25-6716-Black	25	Black	49.73mm	16.48mm	5.99mm	1.80mm	41.12mm	33.15mm	7.80mm	3.99mm	33.25mm	7.98mm	100.00mm	
40-6816	40	Clear	71.83mm	19.00mm	8.99mm	2.58mm	65.13mm	52.83mm	12.32mm	6.15mm	52.83mm	11.99mm	160.00mm	
40-6816-Black	40	Black	71.83mm	19.00mm	8.99mm	2.58mm	65.13mm	52.83mm	12.32mm	6.15mm	52.83mm	11.99mm	160.00mm	

Part No.	Series	Color	N	P	Q	R	S	T	U	V	W	X	Y	Weight
6716	10	Clear	.500"	.812"	1.000"	1.000"	#8 FHS	—	.257"	1.000"	.500"	.343"	.406"	.417 lb
6716-Black	10	Black	.500"	.812"	1.000"	1.000"	#8 FHS		.257"	1.000"	.500"	.343"	.406"	.417 lb
6816	15	Clear	.750"	1.253"	1.500"	1.500"	#10 FHS		.328"	1.500"	.656"	.375"	.625"	1.461 lb
6816-Black	15	Black	.750"	1.253"	1.500"	1.500"	#10 FHS		.328"	1.500"	.656"	.375"	.625"	1.461 lb
25-6716	25	Clear	12.50mm	20.56mm	25.00mm	25.00mm	#8 FHS		6.30mm	25.00mm	12.50mm	8.23mm	10.69mm	.190 kg
25-6716-Black	25	Black	12.50mm	20.56mm	25.00mm	25.00mm	#8 FHS		6.30mm	25.00mm	12.50mm	8.23mm	10.69mm	.190 kg
40-6816	40	Clear	20.00mm	32.56mm	40.00mm	40.00mm	#10 FHS		8.33mm	40.00mm	20.00mm	9.53mm	17.42mm	.703 kg
40-6816-Black	40	Black	20.00mm	32.56mm	40.00mm	40.00mm	#10 FHS		8.33mm	40.00mm	20.00mm	9.53mm	17.42mm	.703 kg

3 Slot Mount - Single Flange Long Standard Linear Bearing with Brake Holes

Part No.	Series	Color	A	B	C	D	E	F	G	H	J	K	L	M
6416	10	Clear	1.968"	.656"	.250"	.094"	1.624"	1.312"	.306"	.156"	1.312"	.311"	4.000"	1.000"
6416-Black	10	Black	1.968"	.656"	.250"	.094"	1.624"	1.312"	.306"	.156"	1.312"	.311"	4.000"	1.000"
6516	15	Clear	2.750"	.750"	.375"	.125"	2.505"	2.005"	.493"	.250"	2.000"	.500"	6.000"	1.500"
6516-Black	15	Black	2.750"	.750"	.375"	.125"	2.505"	2.005"	.493"	.250"	2.000"	.500"	6.000"	1.500"
25-6416	25	Clear	49.73mm	16.48mm	5.99mm	1.80mm	41.12mm	33.15mm	7.80mm	3.99mm	33.25mm	7.98mm	100.00mm	25.00mm
25-6416-Black	25	Black	49.73mm	16.48mm	5.99mm	1.80mm	41.12mm	33.15mm	7.80mm	3.99mm	33.25mm	7.98mm	100.00mm	25.00mm
40-6516	40	Clear	71.83mm	19.00mm	8.99mm	2.58mm	65.13mm	52.83mm	12.32mm	6.15mm	52.83mm	11.99mm	160.00mm	40.00mm
40-6516-Black	40	Black	71.83mm	19.00mm	8.99mm	2.58mm	65.13mm	52.83mm	12.32mm	6.15mm	52.83mm	11.99mm	160.00mm	40.00mm

Part No.	Series	Color	N	P	Q	R	S	T	U	V	W	X	Y	Weight
6416	10	Clear	.500"	.812"	1.000"	1.000"	#8 FHS	.265"	.257"	1.000"	.500"	.343"	.406"	.414 lb
6416-Black	10	Black	.500"	.812"	1.000"	1.000"	#8 FHS	.265"	.257"	1.000"	.500"	.343"	.406"	.414 lb
6516	15	Clear	.750"	1.253"	1.500"	1.500"	#10 FHS	.344"	.328"	1.500"	.656"	.375"	.625"	1.443 lb
6516-Black	15	Black	.750"	1.253"	1.500"	1.500"	#10 FHS	.344"	.328"	1.500"	.656"	.375"	.625"	1.443 lb
25-6416	25	Clear	12.50mm	20.56mm	25.00mm	25.00mm	#8 FHS	6.53mm	6.30mm	25.00mm	12.50mm	8.23mm	10.69mm	.190 kg
25-6416-Black	25	Black	12.50mm	20.56mm	25.00mm	25.00mm	#8 FHS	6.53mm	6.30mm	25.00mm	12.50mm	8.23mm	10.69mm	.190 kg
40-6516	40	Clear	20.00mm	32.56mm	40.00mm	40.00mm	#10 FHS	8.71mm	8.33mm	40.00mm	20.00mm	9.53mm	17.42mm	.695 kg
40-6516-Black	40	Black	20.00mm	32.56mm	40.00mm	40.00mm	#10 FHS	8.71mm	8.33mm	40.00mm	20.00mm	9.53mm	17.42mm	.695 kg

Material Specifications

Material	Alloy*	Process	Finish
Aluminum	6105-T5	Extrude	Anodize

* Or comparable

3 Slot Mount - Double Flange Short Standard Linear Bearing

Part Description:

The 3 slot mount – double flange short standard linear bearing with or without brake holes is typically used in linear motion applications. It houses profiles with a minimum of three open T-slots, has a double flange and is a shorter option. The bearing includes pads, screws and shims; the pads are made of self-lubricating UHMW. All 80/20 bearings are designed for compression loads only and not intended to support hanging loads.

Fractional

Metric

Black Anodized

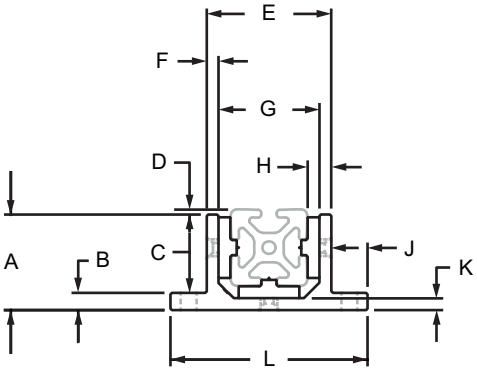

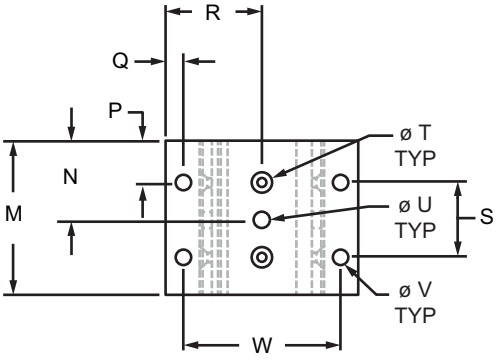

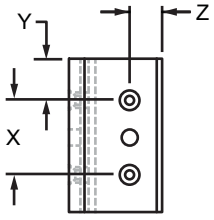

CONTINUE

3 Slot Mount - Double Flange Short Standard Linear Bearing

Part No.	Series	Color	A	B	C	D	E	F	G	H	J	K	L	M
6725	10	Clear	1.218"	.312"	.906"	.094"	1.624"	.156"	1.312"	.306"	.656"	.156"	2.936"	1.875"
6725-Black	10	Black	1.218"	.312"	.906"	.094"	1.624"	.156"	1.312"	.306"	.656"	.156"	2.936"	1.875"
6825	15	Clear	1.875"	.375"	1.500"	.125"	2.505"	.250"	2.005"	.493"	.748"	.250"	4.000"	2.812"
6825-Black	15	Black	1.875"	.375"	1.500"	.125"	2.505"	.250"	2.005"	.493"	.748"	.250"	4.000"	2.812"
25-6725	25	Clear	31.20mm	8.00mm	23.20mm	1.80mm	41.15mm	4.00mm	33.15mm	7.80mm	16.47mm	4.00mm	74.09mm	47.00mm
25-6725-Black	25	Black	31.20mm	8.00mm	23.20mm	1.80mm	41.15mm	4.00mm	33.15mm	7.80mm	16.47mm	4.00mm	74.09mm	47.00mm
40-6825	40	Clear	50.00mm	9.00mm	41.00mm	2.58mm	65.12mm	6.15mm	52.82mm	12.32mm	19.00mm	6.15mm	103.12mm	75.00mm
40-6825-Black	40	Black	50.00mm	9.00mm	41.00mm	2.58mm	65.12mm	6.15mm	52.82mm	12.32mm	19.00mm	6.15mm	103.12mm	75.00mm

Part No.	Series	N	P	Q	R	S	T	U	V	W	X	Y	Z	Weight
6725	10	—	.438"	.343"	1.468"	1.000"	#8 FHS	—	.257"	2.250"	1.000"	.438"	.406"	.207 lb
6725-Black	10		.438"	.343"	1.468"	1.000"	#8 FHS		.257"	2.250"	1.000"	.438"	.406"	.207 lb
6825	15		.656"	.375"	2.000"	1.500"	#10 FHS		.328"	3.250"	1.500"	.656"	.625"	.655 lb
6825-Black	15		.656"	.375"	2.000"	1.500"	#10 FHS		.328"	3.250"	1.500"	.656"	.625"	.655 lb
25-6725	25		11.00mm	8.48mm	37.05mm	25.00mm	#8 FHS		6.30mm	57.12mm	25.00mm	11.00mm	10.64mm	.0929 kg
25-6725-Black	25		11.00mm	8.48mm	37.05mm	25.00mm	#8 FHS		6.30mm	57.12mm	25.00mm	11.00mm	10.64mm	.0929 kg
40-6825	40		17.50mm	9.50mm	51.56mm	40.00mm	#10 FHS		8.33mm	84.12mm	40.00mm	17.50mm	17.42mm	.3137 kg
40-6825-Black	40		17.50mm	9.50mm	51.56mm	40.00mm	#10 FHS		8.33mm	84.12mm	40.00mm	17.50mm	17.42mm	.3137 kg

3 Slot Mount - Double Flange Short Standard Linear Bearing with Brake Holes

Part No.	Series	Color	A	B	C	D	E	F	G	H	J	K	L	M
6425	10	Clear	1.218"	.312"	.906"	.094"	1.624"	.156"	1.312"	.306"	.656"	.156"	2.936"	1.875"
6425-Black	10	Black	1.218"	.312"	.906"	.094"	1.624"	.156"	1.312"	.306"	.656"	.156"	2.936"	1.875"
6525	15	Clear	1.875"	.375"	1.500"	.125"	2.505"	.250"	2.005"	.493"	.748"	.250"	4.000"	2.812"
6525-Black	15	Black	1.875"	.375"	1.500"	.125"	2.505"	.250"	2.005"	.493"	.748"	.250"	4.000"	2.812"
25-6425	25	Clear	31.20mm	8.00mm	23.20mm	1.80mm	41.15mm	4.00mm	33.15mm	7.80mm	16.47mm	4.00mm	74.09mm	47.00mm
25-6425-Black	25	Black	31.20mm	8.00mm	23.20mm	1.80mm	41.15mm	4.00mm	33.15mm	7.80mm	16.47mm	4.00mm	74.09mm	47.00mm
40-6525	40	Clear	50.00mm	9.00mm	41.00mm	2.58mm	65.12mm	6.15mm	52.82mm	12.32mm	19.00mm	6.15mm	103.12mm	75.00mm
40-6525-Black	40	Black	50.00mm	9.00mm	41.00mm	2.58mm	65.12mm	6.15mm	52.82mm	12.32mm	19.00mm	6.15mm	103.12mm	75.00mm

Part No.	Series	N	P	Q	R	S	T	U	V	W	X	Y	Z	Weight
6425	10	.938"	.438"	.343"	1.468"	1.000"	#8 FHS	.265"	.257"	2.250"	1.000"	.438"	.406"	.205 lb
6425-Black	10	.938"	.438"	.343"	1.468"	1.000"	#8 FHS	.265"	.257"	2.250"	1.000"	.438"	.406"	.205 lb
6525	15	1.406"	.656"	.375"	2.000"	1.500"	#10 FHS	.344"	.328"	3.250"	1.500"	.656"	.625"	.653 lb
6525-Black	15	1.406"	.656"	.375"	2.000"	1.500"	#10 FHS	.344"	.328"	3.250"	1.500"	.656"	.625"	.653 lb
25-6425	25	23.50mm	11.00mm	8.48mm	37.05mm	25.00mm	#8 FHS	6.53mm	6.30mm	57.12mm	25.00mm	11.00mm	10.64mm	.0916 kg
25-6425-Black	25	23.50mm	11.00mm	8.48mm	37.05mm	25.00mm	#8 FHS	6.53mm	6.30mm	57.12mm	25.00mm	11.00mm	10.64mm	.0916 kg
40-6525	40	37.50mm	17.50mm	9.50mm	51.56mm	40.00mm	#10 FHS	8.71mm	8.33mm	84.12mm	40.00mm	17.50mm	17.42mm	.3116 kg
40-6525-Black	40	37.50mm	17.50mm	9.50mm	51.56mm	40.00mm	#10 FHS	8.71mm	8.33mm	84.12mm	40.00mm	17.50mm	17.42mm	.3116 kg

Material Specifications

Material	Alloy*	Process	Finish
Aluminum	6105-T5	Extrude	Anodize

* Or comparable

3 Slot Mount - Double Flange Long Standard Linear Bearing

Part Description:

The 3 slot mount – double flange long standard linear bearing with or without brake holes is typically used in linear motion applications. It houses profiles with a minimum of three open T-slots, has a double flange and is a longer option. The bearing includes pads, screws and shims; the pads are made of self-lubricating UHMW. All 80/20 bearings are designed for compression loads only and not intended to support hanging loads.

Fractional

Metric

Black Anodized

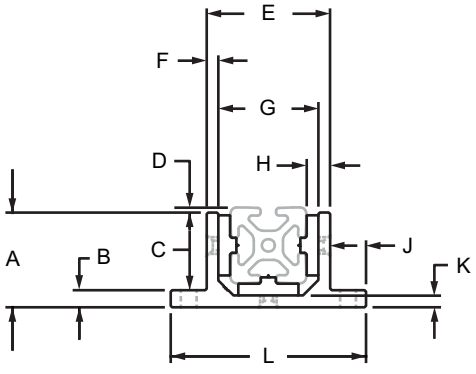

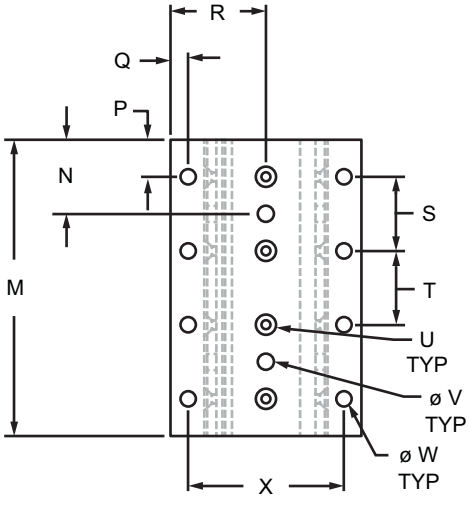

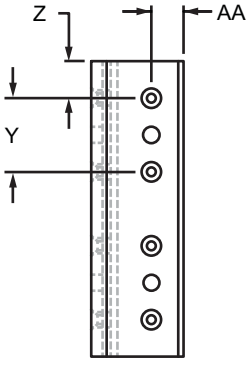

CONTINUE

3 Slot Mount - Double Flange Long Standard Linear Bearing

Part No.	Series	Color	A	B	C	D	E	F	G	H	J	K	L	M	N
6726	10	Clear	1.218"	.312"	.906"	.094"	1.624"	.156"	1.312"	.306"	.656"	.156"	2.936"	4.000"	—
6726-Black	10	Black	1.218"	.312"	.906"	.094"	1.624"	.156"	1.312"	.306"	.656"	.156"	2.936"	4.000"	
6826	15	Clear	1.875"	.375"	1.500"	.125"	2.505"	.250"	2.005"	.493"	.748"	.250"	4.000"	6.000"	
6826-Black	15	Black	1.875"	.375"	1.500"	.125"	2.505"	.250"	2.005"	.493"	.748"	.250"	4.000"	6.000"	
25-6726	25	Clear	31.20mm	8.00mm	23.20mm	1.80mm	41.15mm	4.00mm	33.15mm	7.80mm	16.47mm	4.00mm	74.09mm	100.00mm	
25-6726-Black	25	Black	31.20mm	8.00mm	23.20mm	1.80mm	41.15mm	4.00mm	33.15mm	7.80mm	16.47mm	4.00mm	74.09mm	100.00mm	
40-6826	40	Clear	50.00mm	9.00mm	41.00mm	2.58mm	65.12mm	6.15mm	52.82mm	12.32mm	19.00mm	6.15mm	103.12mm	160.00mm	
40-6826-Black	40	Black	50.00mm	9.00mm	41.00mm	2.58mm	65.12mm	6.15mm	52.82mm	12.32mm	19.00mm	6.15mm	103.12mm	160.00mm	

Part No.	Series	Color	P	Q	R	S	T	U	V	W	X	Y	Z	AA	Weight
6726	10	Clear	.500"	.343"	1.468"	1.000"	1.000"	#8 FHS	—	.257"	2.250"	1.000"	.500"	.406"	.437 lb
6726-Black	10	Black	.500"	.343"	1.468"	1.000"	1.000"	#8 FHS		.257"	2.250"	1.000"	.500"	.406"	.437 lb
6826	15	Clear	.750"	.375"	2.000"	1.500"	1.500"	#10 FHS		.328"	3.250"	1.500"	.750"	.625"	1.394 lb
6826-Black	15	Black	.750"	.375"	2.000"	1.500"	1.500"	#10 FHS		.328"	3.250"	1.500"	.750"	.625"	1.394 lb
25-6726	25	Clear	12.50mm	8.48mm	37.05mm	25.00mm	25.00mm	#8 FHS		6.30mm	57.12mm	25.00mm	12.50mm	10.64mm	.2028 kg
25-6726-Black	25	Black	12.50mm	8.48mm	37.05mm	25.00mm	25.00mm	#8 FHS		6.30mm	57.12mm	25.00mm	12.50mm	10.64mm	.2028 kg
40-6826	40	Clear	20.00mm	9.50mm	51.56mm	40.00mm	40.00mm	#10 FHS		8.33mm	84.12mm	40.00mm	20.00mm	17.42mm	.6651 kg
40-6826-Black	40	Black	20.00mm	9.50mm	51.56mm	40.00mm	40.00mm	#10 FHS		8.33mm	84.12mm	40.00mm	20.00mm	17.42mm	.6651 kg

3 Slot Mount - Double Flange Long Standard Linear Bearing with Brake Holes

Part No.	Series	Color	A	B	C	D	E	F	G	H	J	K	L	M	N
6426	10	Clear	1.218"	.312"	.906"	.094"	1.624"	.156"	1.312"	.306"	.656"	.156"	2.936"	4.000"	1.000"
6426-Black	10	Black	1.218"	.312"	.906"	.094"	1.624"	.156"	1.312"	.306"	.656"	.156"	2.936"	4.000"	1.000"
6526	15	Clear	1.875"	.375"	1.500"	.125"	2.505"	.250"	2.005"	.493"	.748"	.250"	4.000"	6.000"	1.500"
6526-Black	15	Black	1.875"	.375"	1.500"	.125"	2.505"	.250"	2.005"	.493"	.748"	.250"	4.000"	6.000"	1.500"
25-6426	25	Clear	31.20mm	8.00mm	23.20mm	1.80mm	41.15mm	4.00mm	33.15mm	7.80mm	16.47mm	4.00mm	74.09mm	100.00mm	25.00mm
25-6426-Black	25	Black	31.20mm	8.00mm	23.20mm	1.80mm	41.15mm	4.00mm	33.15mm	7.80mm	16.47mm	4.00mm	74.09mm	100.00mm	25.00mm
40-6526	40	Clear	50.00mm	9.00mm	41.00mm	2.58mm	65.12mm	6.15mm	52.82mm	12.32mm	19.00mm	6.15mm	103.12mm	160.00mm	40.00mm
40-6526-Black	40	Black	50.00mm	9.00mm	41.00mm	2.58mm	65.12mm	6.15mm	52.82mm	12.32mm	19.00mm	6.15mm	103.12mm	160.00mm	40.00mm

Part No.	Series	Color	P	Q	R	S	T	U	V	W	X	Y	Z	AA	Weight
6426	10	Clear	.500"	.343"	1.468"	1.000"	1.000"	#8 FHS	.265"	.257"	2.250"	1.000"	.500"	.406"	.433 lb
6426-Black	10	Black	.500"	.343"	1.468"	1.000"	1.000"	#8 FHS	.265"	.257"	2.250"	1.000"	.500"	.406"	.433 lb
6526	15	Clear	.750"	.375"	2.000"	1.500"	1.500"	#10 FHS	.344"	.328"	3.250"	1.500"	.750"	.625"	1.379 lb
6526-Black	15	Black	.750"	.375"	2.000"	1.500"	1.500"	#10 FHS	.344"	.328"	3.250"	1.500"	.750"	.625"	1.379 lb
25-6426	25	Clear	12.50mm	8.48mm	37.05mm	25.00mm	25.00mm	#8 FHS	6.53mm	6.30mm	57.12mm	25.00mm	12.50mm	10.64mm	.1972 kg
25-6426-Black	25	Black	12.50mm	8.48mm	37.05mm	25.00mm	25.00mm	#8 FHS	6.53mm	6.30mm	57.12mm	25.00mm	12.50mm	10.64mm	.1972 kg
40-6526	40	Clear	20.00mm	9.50mm	51.56mm	40.00mm	40.00mm	#10 FHS	8.71mm	8.33mm	84.12mm	40.00mm	20.00mm	17.42mm	.6650 kg
40-6526-Black	40	Black	20.00mm	9.50mm	51.56mm	40.00mm	40.00mm	#10 FHS	8.71mm	8.33mm	84.12mm	40.00mm	20.00mm	17.42mm	.6650 kg

Material Specifications

Material	Alloy*	Process	Finish
Aluminum	6105-T5	Extrude	Anodize

* Or comparable

4 Slot Mount - Double Flange Short Standard Linear Bearing

Part Description:

The 4 slot mount – double flange short standard linear bearing with or without brake holes is typically used in linear motion applications. It houses profiles with a minimum of four open T-slots, has a double flange and is a shorter option. The bearing includes pads, screws and shims; the pads are made of self-lubricating UHMW. All 80/20 bearings are designed for compression loads only and not intended to support hanging loads.

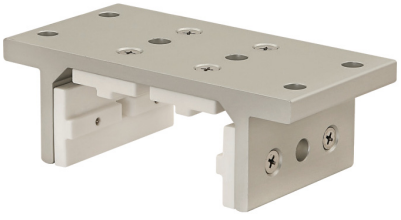

Fractional

Metric

Black Anodized

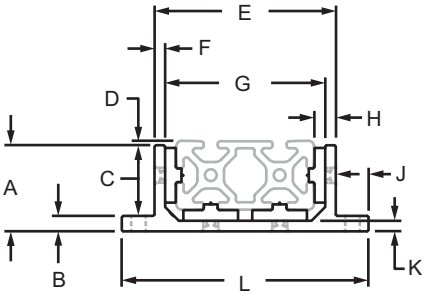

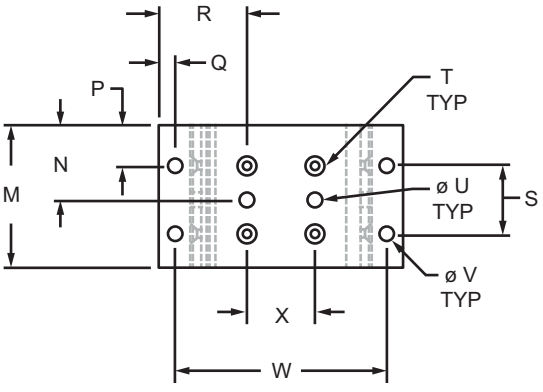

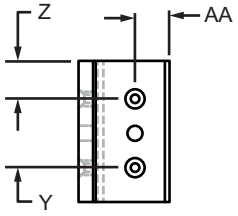

CONTINUE

4 Slot Mount - Double Flange Short Standard Linear Bearing

Part No.	Series	Color	A	B	C	D	E	F	G	H	J	K	L	M	N
6723	10	Clear	1.218"	.312"	.906"	.094"	2.630"	.156"	2.318"	.306"	.654"	.156"	3.938"	1.875"	—
6723-Black	10	Black	1.218"	.312"	.906"	.094"	2.630"	.156"	2.318"	.306"	.654"	.156"	3.938"	1.875"	
6823	15	Clear	1.875"	.375"	1.500"	.125"	4.005"	.250"	3.505"	.493"	.748"	.250"	5.500"	2.812"	
6823-Black	15	Black	1.875"	.375"	1.500"	.125"	4.005"	.250"	3.505"	.493"	.748"	.250"	5.500"	2.812"	
25-6723	25	Clear	31.24mm	8.00mm	23.24mm	1.80mm	66.29mm	3.99mm	58.32mm	7.80mm	16.48mm	3.99mm	99.26mm	47.00mm	
25-6723-Black	25	Black	31.24mm	8.00mm	23.24mm	1.80mm	66.29mm	3.99mm	58.32mm	7.80mm	16.48mm	3.99mm	99.26mm	47.00mm	
40-6823	40	Clear	50.00mm	9.00mm	41.00mm	2.58mm	105.31mm	6.15mm	93.01mm	12.32mm	19.00mm	6.15mm	143.31mm	75.00mm	
40-6823-Black	40	Black	50.00mm	9.00mm	41.00mm	2.58mm	105.31mm	6.15mm	93.01mm	12.32mm	19.00mm	6.15mm	143.31mm	75.00mm	

Part No.	Series	Color	P	Q	R	S	T	U	V	W	X	Y	Z	AA	Weight
6723	10	Clear	.438"	1.469"	.344"	1.000"	#8 FHS	—	.257"	3.250"	1.000"	1.000"	.438"	.406"	.247 lb
6723-Black	10	Black	.438"	1.469"	.344"	1.000"	#8 FHS		.257"	3.250"	1.000"	1.000"	.438"	.406"	.247 lb
6823	15	Clear	.656"	2.000"	.375"	1.500"	#10 FHS		.328"	4.750"	1.500"	1.500"	.656"	.625"	.797 lb
6823-Black	15	Black	.656"	2.000"	.375"	1.500"	#10 FHS		.328"	4.750"	1.500"	1.500"	.656"	.625"	.797 lb
25-6723	25	Clear	11.00mm	37.13mm	8.48mm	25.00mm	#8 FHS		6.53mm	82.23mm	25.00mm	25.00mm	11.00mm	10.69mm	.1154 kg
25-6723-Black	25	Black	11.00mm	37.13mm	8.48mm	25.00mm	#8 FHS		6.53mm	82.23mm	25.00mm	25.00mm	11.00mm	10.69mm	.1154 kg
40-6823	40	Clear	17.50mm	51.66mm	9.50mm	40.00mm	#10 FHS		8.33mm	124.31mm	40.00mm	40.00mm	17.50mm	17.42mm	.3792 kg
40-6823-Black	40	Black	17.50mm	51.66mm	9.50mm	40.00mm	#10 FHS		8.33mm	124.31mm	40.00mm	40.00mm	17.50mm	17.42mm	.3792 kg

4 Slot Mount - Double Flange Short Standard Linear Bearing with Brake Holes

Part No.	Series	Color	A	B	C	D	E	F	G	H	J	K	L	M	N
6423	10	Clear	1.218"	.312"	.906"	.094"	2.630"	.156"	2.318"	.306"	.654"	.156"	3.938"	1.875"	.938"
6423-Black	10	Black	1.218"	.312"	.906"	.094"	2.630"	.156"	2.318"	.306"	.654"	.156"	3.938"	1.875"	.938"
6523	15	Clear	1.875"	.375"	1.500"	.125"	4.005"	.250"	3.505"	.493"	.748"	.250"	5.500"	2.812"	1.406"
6523-Black	15	Black	1.875"	.375"	1.500"	.125"	4.005"	.250"	3.505"	.493"	.748"	.250"	5.500"	2.812"	1.406"
25-6423	25	Clear	31.24mm	8.00mm	23.24mm	1.80mm	66.29mm	3.99mm	58.32mm	7.80mm	16.48mm	3.99mm	99.26mm	47.00mm	23.50mm
25-6423-Black	25	Black	31.24mm	8.00mm	23.24mm	1.80mm	66.29mm	3.99mm	58.32mm	7.80mm	16.48mm	3.99mm	99.26mm	47.00mm	23.50mm
40-6523	40	Clear	50.00mm	9.00mm	41.00mm	2.58mm	105.31mm	6.15mm	93.01mm	12.32mm	19.00mm	6.15mm	143.31mm	75.00mm	37.50mm
40-6523-Black	40	Black	50.00mm	9.00mm	41.00mm	2.58mm	105.31mm	6.15mm	93.01mm	12.32mm	19.00mm	6.15mm	143.31mm	75.00mm	37.50mm

Part No.	Series	Color	P	Q	R	S	T	U	V	W	X	Y	Z	AA	Weight
6423	10	Clear	.438"	1.469"	.344"	1.000"	#8 FHS	.265"	.257"	3.250"	1.000"	1.000"	.438"	.406"	.244 lb
6423-Black	10	Black	.438"	1.469"	.344"	1.000"	#8 FHS	.265"	.257"	3.250"	1.000"	1.000"	.438"	.406"	.244 lb
6523	15	Clear	.656"	2.000"	.375"	1.500"	#10 FHS	.343"	.328"	4.750"	1.500"	1.500"	.656"	.625"	.785 lb
6523-Black	15	Black	.656"	2.000"	.375"	1.500"	#10 FHS	.343"	.328"	4.750"	1.500"	1.500"	.656"	.625"	.785 lb
25-6423	25	Clear	11.00mm	37.13mm	8.48mm	25.00mm	#8 FHS	6.53mm	6.53mm	82.23mm	25.00mm	25.00mm	11.00mm	10.69mm	.1076 kg
25-6423-Black	25	Black	11.00mm	37.13mm	8.48mm	25.00mm	#8 FHS	6.53mm	6.53mm	82.23mm	25.00mm	25.00mm	11.00mm	10.69mm	.1076 kg
40-6523	40	Clear	17.50mm	51.66mm	9.50mm	40.00mm	#10 FHS	8.71mm	8.33mm	124.31mm	40.00mm	40.00mm	17.50mm	17.42mm	.3702 kg
40-6523-Black	40	Black	17.50mm	51.66mm	9.50mm	40.00mm	#10 FHS	8.71mm	8.33mm	124.31mm	40.00mm	40.00mm	17.50mm	17.42mm	.3702 kg

Material Specifications

Material	Alloy*	Process	Finish
Aluminum	6105-T5	Extrude	Anodize

* Or comparable

4 Slot Mount - Double Flange Long Standard Linear Bearing

Part Description:

The 4 slot mount – double flange long standard linear bearing with or without brake holes is typically used in linear motion applications. It houses profiles with a minimum of four open T-slots, has a double flange and is a longer option. The bearing includes pads, screws and shims; the pads are made of self-lubricating UHMW. All 80/20 bearings are designed for compression loads only and not intended to support hanging loads.

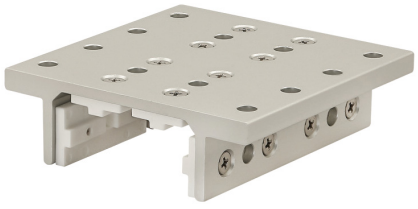

Fractional

Metric

Black Anodized

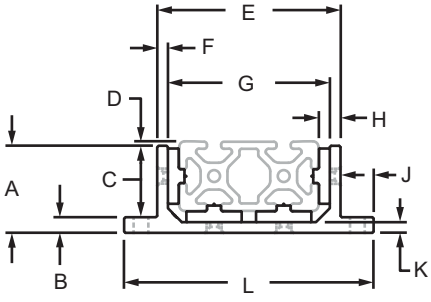

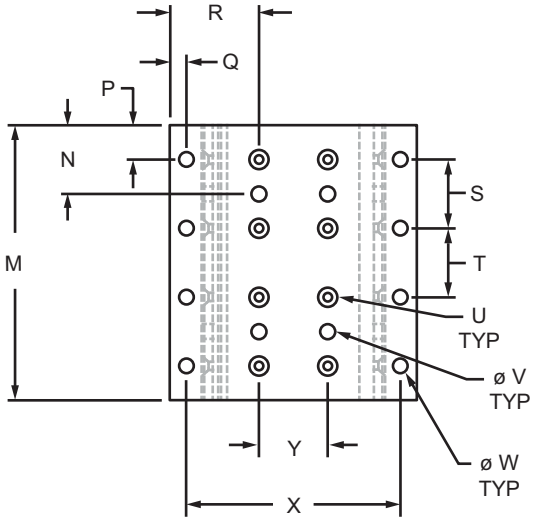

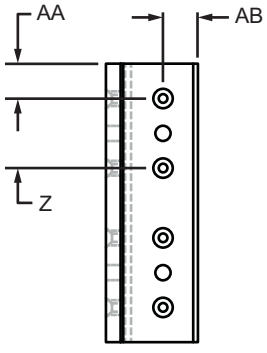

CONTINUE

4 Slot Mount - Double Flange Long Standard Linear Bearing (Continued)

4 Slot Mount - Double Flange Long Standard Linear Bearing

Part No.	Series	Color	A	B	C	D	E	F	G	H	J	K	L	M	N
6724	10	Clear	1.218"	.312"	.906"	.094"	2.630"	.156"	2.318"	.306"	.654"	.156"	3.938"	4.000"	—
6724-Black	10	Black	1.218"	.312"	.906"	.094"	2.630"	.156"	2.318"	.306"	.654"	.156"	3.938"	4.000"	
6824	15	Clear	1.875"	.375"	1.500"	.125"	4.005"	.250"	3.505"	.493"	.748"	.250"	5.500"	6.000"	
6824-Black	15	Black	1.875"	.375"	1.500"	.125"	4.005"	.250"	3.505"	.493"	.748"	.250"	5.500"	6.000"	
25-6724	25	Clear	31.24mm	8.00mm	23.24mm	1.80mm	66.29mm	3.99mm	58.32mm	7.80mm	16.48mm	3.99mm	99.26mm	100.00mm	
25-6724-Black	25	Black	31.24mm	8.00mm	23.24mm	1.80mm	66.29mm	3.99mm	58.32mm	7.80mm	16.48mm	3.99mm	99.26mm	100.00mm	
40-6824	40	Clear	50.00mm	9.00mm	41.00mm	2.58mm	105.31mm	6.15mm	93.01mm	12.32mm	19.00mm	6.15mm	143.31mm	160.00mm	
40-6824-Black	40	Black	50.00mm	9.00mm	41.00mm	2.58mm	105.31mm	6.15mm	93.01mm	12.32mm	19.00mm	6.15mm	143.31mm	160.00mm	

Part No.	Series	P	Q	R	S	T	U	V	W	X	Y	Z	AA	AB	Weight
6724	10	.500"	1.469"	.344"	1.000"	1.000"	#8 FHS	—	.257"	3.250"	1.000"	1.000"	.500"	.406"	.519 lb
6724-Black	10	.500"	1.469"	.344"	1.000"	1.000"	#8 FHS		.257"	3.250"	1.000"	1.000"	.500"	.406"	.519 lb
6824	15	.750"	2.000"	.375"	1.500"	1.500"	#10 FHS		.328"	4.750"	1.500"	1.500"	.750"	.625"	1.691 lb
6824-Black	15	.750"	2.000"	.375"	1.500"	1.500"	#10 FHS		.328"	4.750"	1.500"	1.500"	.750"	.625"	1.691 lb
25-6724	25	12.50mm	37.13mm	8.48mm	25.00mm	25.00mm	#8 FHS		6.53mm	82.23mm	25.00mm	25.00mm	12.50mm	10.69mm	.2393 kg
25-6724-Black	25	12.50mm	37.13mm	8.48mm	25.00mm	25.00mm	#8 FHS		6.53mm	82.23mm	25.00mm	25.00mm	12.50mm	10.69mm	.2393 kg
40-6824	40	20.00mm	51.66mm	9.50mm	40.00mm	40.00mm	#10 FHS		8.33mm	124.31mm	40.00mm	40.00mm	20.00mm	17.42mm	.7938 kg
40-6824-Black	40	20.00mm	51.66mm	9.50mm	40.00mm	40.00mm	#10 FHS		8.33mm	124.31mm	40.00mm	40.00mm	20.00mm	17.42mm	.7938 kg

4 Slot Mount - Double Flange Long Standard Linear Bearing with Brake Holes

Part No.	Series	Color	A	B	C	D	E	F	G	H	J	K	L	M	N
6424	10	Clear	1.218"	.312"	.906"	.094"	2.630"	.156"	2.318"	.306"	.654"	.156"	3.938"	4.000"	1.000"
6424-Black	10	Black	1.218"	.312"	.906"	.094"	2.630"	.156"	2.318"	.306"	.654"	.156"	3.938"	4.000"	1.000"
6524	15	Clear	1.875"	.375"	1.500"	.125"	4.005"	.250"	3.505"	.493"	.748"	.250"	5.500"	6.000"	1.500"
6524-Black	15	Black	1.875"	.375"	1.500"	.125"	4.005"	.250"	3.505"	.493"	.748"	.250"	5.500"	6.000"	1.500"
25-6424	25	Clear	31.24mm	8.00mm	23.24mm	1.80mm	66.29mm	3.99mm	58.32mm	7.80mm	16.48mm	3.99mm	99.26mm	100.00mm	25.00mm
25-6424-Black	25	Black	31.24mm	8.00mm	23.24mm	1.80mm	66.29mm	3.99mm	58.32mm	7.80mm	16.48mm	3.99mm	99.26mm	100.00mm	25.00mm
40-6524	40	Clear	50.00mm	9.00mm	41.00mm	2.58mm	105.31mm	6.15mm	93.01mm	12.32mm	19.00mm	6.15mm	143.31mm	160.00mm	40.00mm
40-6524-Black	40	Black	50.00mm	9.00mm	41.00mm	2.58mm	105.31mm	6.15mm	93.01mm	12.32mm	19.00mm	6.15mm	143.31mm	160.00mm	40.00mm

Part No.	Series	P	Q	R	S	T	U	V	W	X	Y	Z	AA	AB	Weight
6424	10	.500"	1.469"	.344"	1.000"	1.000"	#8 FHS	.265"	.257"	3.250"	1.000"	1.000"	.500"	.406"	.515 lb
6424-Black	10	.500"	1.469"	.344"	1.000"	1.000"	#8 FHS	.265"	.257"	3.250"	1.000"	1.000"	.500"	.406"	.515 lb
6524	15	.750"	2.000"	.375"	1.500"	1.500"	#10 FHS	.343"	.328"	4.750"	1.500"	1.500"	.750"	.625"	1.668 lb
6524-Black	15	.750"	2.000"	.375"	1.500"	1.500"	#10 FHS	.343"	.328"	4.750"	1.500"	1.500"	.750"	.625"	1.668 lb
25-6424	25	12.50mm	37.13mm	8.48mm	25.00mm	25.00mm	#8 FHS	6.53mm	6.53mm	82.23mm	25.00mm	25.00mm	12.50mm	10.69mm	.2265 kg
25-6424-Black	25	12.50mm	37.13mm	8.48mm	25.00mm	25.00mm	#8 FHS	6.53mm	6.53mm	82.23mm	25.00mm	25.00mm	12.50mm	10.69mm	.2265 kg
40-6524	40	20.00mm	51.66mm	9.50mm	40.00mm	40.00mm	#10 FHS	8.71mm	8.33mm	124.31mm	40.00mm	40.00mm	20.00mm	17.42mm	.7879 kg
40-6524-Black	40	20.00mm	51.66mm	9.50mm	40.00mm	40.00mm	#10 FHS	8.71mm	8.33mm	124.31mm	40.00mm	40.00mm	20.00mm	17.42mm	.7879 kg

Material Specifications

Material	Alloy*	Process	Finish
Aluminum	6105-T5	Extrude	Anodize

* Or comparable

3 Slot Mount - Single Flange Short High-Cycle Linear Bearing

Part Description:

The 3 slot mount – single flange short high-cycle linear bearing is typically used in linear motion applications. It contains special threaded inserts in the pads which provide a heavy-duty bearing, with or withouth holes, capable of withstanding repetitive cycles with sudden acceleration and deceleration. The bearing houses profiles with a minimum of three open T-slots, has a single flange and is a shorter option. The pads, screws and shims are included; the pads are made of self-lubricating UHMW. All 80/20 bearings are designed for compression loads only and not intended to support hanging loads.

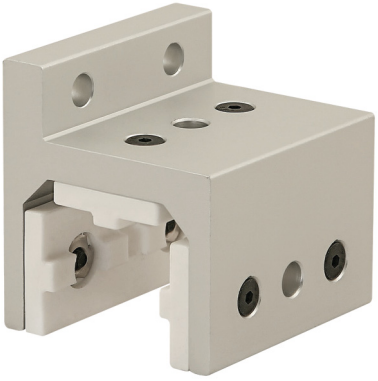

Fractional

Metric

Black Anodized

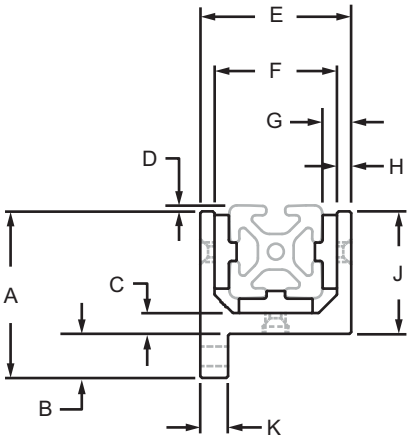

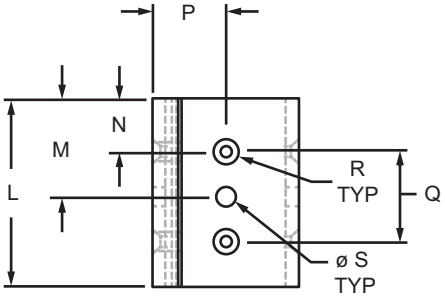

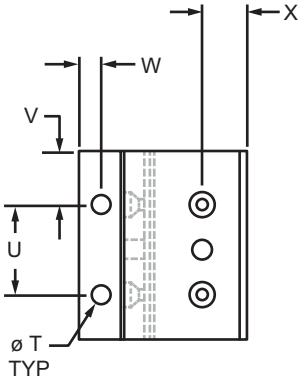

CONTINUE

3 Slot Mount - Single Flange Short High-Cycle Linear Bearing

Part No.	Series	Color	A	B	C	D	E	F	G	H	J	K	L
6830	15	Clear	2.750"	.750"	.375"	.125"	2.505"	2.005"	.493"	.250"	2.000"	.500"	2.812"
6830-Black	15	Black	2.750"	.750"	.375"	.125"	2.505"	2.005"	.493"	.250"	2.000"	.500"	2.812"
40-6830	40	Clear	71.83mm	19.00mm	8.99mm	2.58mm	65.13mm	52.83mm	12.32mm	6.15mm	52.83mm	11.99mm	75.00mm
40-6830-Black	40	Black	71.83mm	19.00mm	8.99mm	2.58mm	65.13mm	52.83mm	12.32mm	6.15mm	52.83mm	11.99mm	75.00mm

Part No.	Series	M	N	P	Q	R	S	T	U	V	W	X	Weight
6830	15	—	.656"	1.253"	1.500"	10-32 FHSCS	—	.328"	1.500"	.656"	.375"	.625"	.708 lb
6830-Black	15		.656"	1.253"	1.500"	10-32 FHSCS		.328"	1.500"	.656"	.375"	.625"	.708 lb
40-6830	40		17.50mm	32.56mm	40.00mm	10-32 FHSCS		8.33mm	40.00mm	17.50mm	9.53mm	17.42mm	.3415 kg
40-6830-Black	40		17.50mm	32.56mm	40.00mm	10-32 FHSCS		8.33mm	40.00mm	17.50mm	9.53mm	17.42mm	.3415 kg

3 Slot Mount - Single Flange Short High-Cycle Linear Bearing with Brake Holes

Part No.	Series	Color	A	B	C	D	E	F	G	H	J	K	L
6530	15	Clear	2.750"	.750"	.375"	.125"	2.505"	2.005"	.493"	.250"	2.000"	.500"	2.812"
6530-Black	15	Black	2.750"	.750"	.375"	.125"	2.505"	2.005"	.493"	.250"	2.000"	.500"	2.812"
40-6530	40	Clear	71.83mm	19.00mm	8.99mm	2.58mm	65.13mm	52.83mm	12.32mm	6.15mm	52.83mm	11.99mm	75.00mm
40-6530-Black	40	Black	71.83mm	19.00mm	8.99mm	2.58mm	65.13mm	52.83mm	12.32mm	6.15mm	52.83mm	11.99mm	75.00mm

Part No.	Series	M	N	P	Q	R	S	T	U	V	W	X	Weight
6530	15	1.406"	.656"	1.253"	1.500"	10-32 FHSCS	.344"	.328"	1.500"	.656"	.375"	.625"	.697 lb
6530-Black	15	1.406"	.656"	1.253"	1.500"	10-32 FHSCS	.344"	.328"	1.500"	.656"	.375"	.625"	.697 lb
40-6530	40	37.50mm	17.50mm	32.56mm	40.00mm	10-32 FHSCS	8.71mm	8.33mm	40.00mm	17.50mm	9.53mm	17.42mm	.3371 kg
40-6530-Black	40	37.50mm	17.50mm	32.56mm	40.00mm	10-32 FHSCS	8.71mm	8.33mm	40.00mm	17.50mm	9.53mm	17.42mm	.3371 kg

Material Specifications

Material	Alloy*	Process	Finish
Aluminum	6105-T5	Extrude	Anodize

* Or comparable

3 Slot Mount - Single Flange Long High-Cycle Linear Bearing

Part Description:

The 3 slot mount – single flange long high-cycle linear bearing with or without brake holes is typically used in linear motion applications. It contains special threaded inserts in the pads which provide a heavy-duty bearing capable of withstanding repetitive cycles with sudden acceleration and deceleration. The bearing houses profiles with a minimum of three open T-slots, has a single flange and is a longer option. The pads, screws and shims are included; the pads are made of self-lubricating UHMW. All 80/20 bearing are designed for compression loads only and not intended to support hanging loads.

Fractional

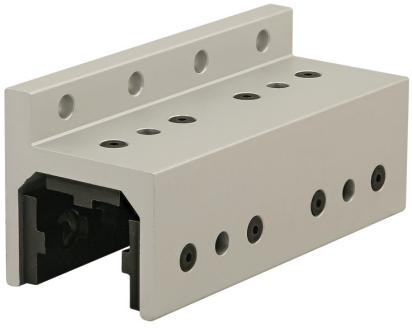

Metric

Black Anodized

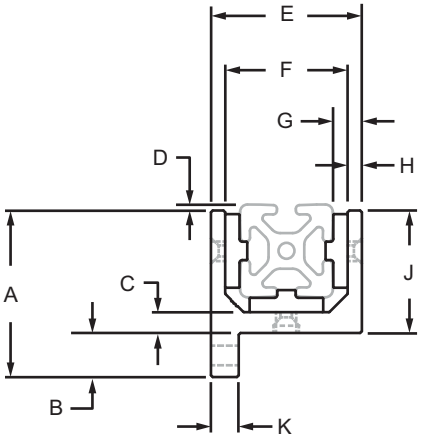

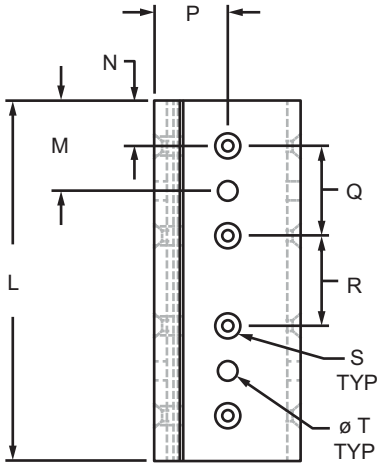

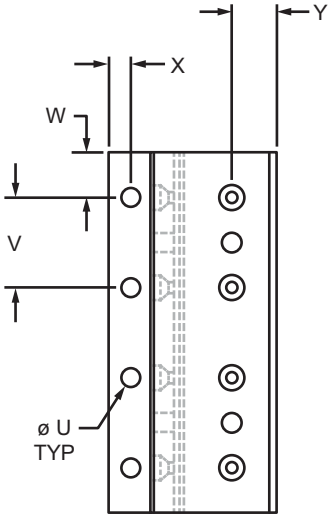

CONTINUE

3 Slot Mount - Single Flange Long High-Cycle Linear Bearing

Part No.	Series	Color	A	B	C	D	E	F	G	H	J	K	L	M
6831	15	Clear	2.750"	.750"	.375"	.125"	2.505"	2.005"	.493"	.250"	2.000"	.500"	6.000"	—
6831-Black	15	Black	2.750"	.750"	.375"	.125"	2.505"	2.005"	.493"	.250"	2.000"	.500"	6.000"	
40-6831	40	Clear	71.83mm	19.00mm	8.99mm	2.58mm	65.13mm	52.83mm	12.32mm	6.15mm	52.83mm	11.99mm	160.00mm	
40-6831-Black	40	Black	71.83mm	19.00mm	8.99mm	2.58mm	65.13mm	52.83mm	12.32mm	6.15mm	52.83mm	11.99mm	160.00mm	

Part No.	Series	Color	N	P	Q	R	S	T	U	V	W	X	Y	Weight
6831	15	Clear	.750"	1.253"	1.500"	1.500"	10-32 FHSCS	—	.328"	1.500"	.656"	.375"	.625"	1.495 lb
6831-Black	15	Black	.750"	1.253"	1.500"	1.500"	10-32 FHSCS		.328"	1.500"	.656"	.375"	.625"	1.495 lb
40-6831	40	Clear	20.00mm	32.56mm	40.00mm	40.00mm	10-32 FHSCS		8.33mm	40.00mm	20.00mm	9.53mm	17.42mm	.7166 kg
40-6831-Black	40	Black	20.00mm	32.56mm	40.00mm	40.00mm	10-32 FHSCS		8.33mm	40.00mm	20.00mm	9.53mm	17.42mm	.7166 kg

3 Slot Mount - Single Flange Long High-Cycle Linear Bearing with Brake Holes

Part No.	Series	Color	A	B	C	D	E	F	G	H	J	K	L	M
6531	15	Clear	2.750"	.750"	.375"	.125"	2.505"	2.005"	.493"	.250"	2.000"	.500"	6.000"	1.500"
6531-Black	15	Black	2.750"	.750"	.375"	.125"	2.505"	2.005"	.493"	.250"	2.000"	.500"	6.000"	1.500"
40-6531	40	Clear	71.83mm	19.00mm	8.99mm	2.58mm	65.13mm	52.83mm	12.32mm	6.15mm	52.83mm	11.99mm	160.00mm	40.00mm
40-6531-Black	40	Black	71.83mm	19.00mm	8.99mm	2.58mm	65.13mm	52.83mm	12.32mm	6.15mm	52.83mm	11.99mm	160.00mm	40.00mm

Part No.	Series	Color	N	P	Q	R	S	T	U	V	W	X	Y	Weight
6531	15	Clear	.750"	1.253"	1.500"	1.500"	10-32 FHSCS	.344"	.328"	1.500"	.656"	.375"	.625"	1.476 lb
6531-Black	15	Black	.750"	1.253"	1.500"	1.500"	10-32 FHSCS	.344"	.328"	1.500"	.656"	.375"	.625"	1.476 lb
40-6531	40	Clear	20.00mm	32.56mm	40.00mm	40.00mm	10-32 FHSCS	8.71mm	8.33mm	40.00mm	20.00mm	9.53mm	17.42mm	.7087 kg
40-6531-Black	40	Black	20.00mm	32.56mm	40.00mm	40.00mm	10-32 FHSCS	8.71mm	8.33mm	40.00mm	20.00mm	9.53mm	17.42mm	.7087 kg

Material Specifications

Material	Alloy*	Process	Finish
Aluminum	6105-T5	Extrude	Anodize

* Or comparable

3 Slot Mount - Double Flange Short High-Cycle Linear Bearing

Part Description:

The 3 slot mount – double flange short high-cycle linear bearing with or without brake holes is typically used in linear motion applications. It contains special threaded inserts in the pads which provide a heavy-duty bearing capable of withstanding repetitive cycles with sudden acceleration and deceleration. The bearing houses profiles with a minimum of three open T-slots, has a double flange and is a shorter option. The pads, screws and shims are included; the pads are made of self-lubricating UHMW. All 80/20 bearing are designed for compression loads only and not intended to support hanging loads.

Fractional

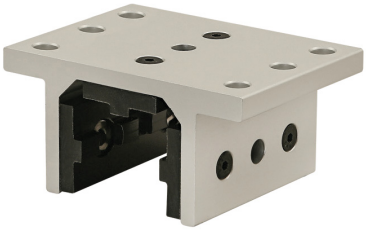

Metric

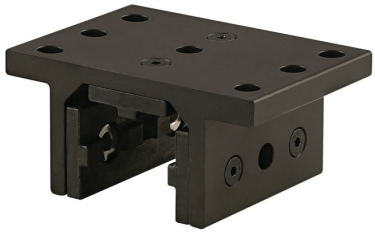

Black Anodized

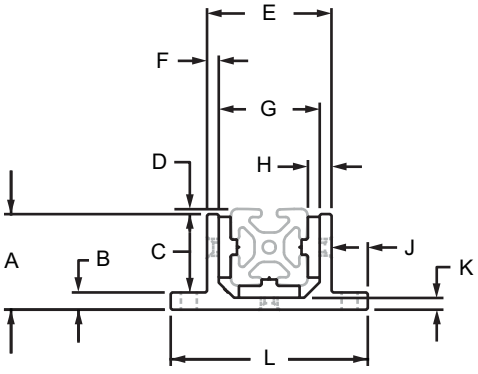

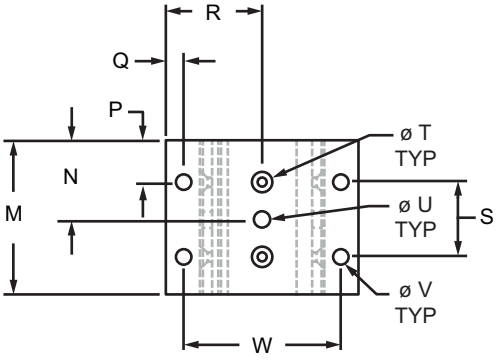

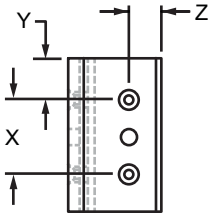

CONTINUE

3 Slot Mount - Double Flange Short High-Cycle Linear Bearing (Continued)

3 Slot Mount - Double Flange Short High-Cycle Linear Bearing

Part No.	Series	Color	A	B	C	D	E	F	G	H	J	K	L	M
6835	15	Clear	1.875"	.375"	1.500"	.125"	2.505"	.250"	2.005"	.493"	.748"	.250"	4.000"	2.812"
6835-Black	15	Black	1.875"	.375"	1.500"	.125"	2.505"	.250"	2.005"	.493"	.748"	.250"	4.000"	2.812"
40-6835	40	Clear	50.00mm	9.00mm	41.00mm	2.58mm	65.12mm	6.15mm	52.82mm	12.32mm	19.00mm	6.15mm	103.12mm	75.00mm
40-6835-Black	40	Black	50.00mm	9.00mm	41.00mm	2.58mm	65.12mm	6.15mm	52.82mm	12.32mm	19.00mm	6.15mm	103.12mm	75.00mm

Part No.	Series	N	P	Q	R	S	T	U	V	W	X	Y	Z	Weight
6835	15	—	.656"	.375"	2.000"	1.500"	10-32 FHSCS	—	.328"	3.250"	1.500"	.656"	.625"	.673 lb
6835-Black	15		.656"	.375"	2.000"	1.500"	10-32 FHSCS		.328"	3.250"	1.500"	.656"	.625"	.673 lb
40-6835	40		17.50mm	9.50mm	51.56mm	40.00mm	10-32 FHSCS		8.33mm	84.12mm	40.00mm	17.50mm	17.42mm	.3140 kg
40-6835-Black	40		17.50mm	9.50mm	51.56mm	40.00mm	10-32 FHSCS		8.33mm	84.12mm	40.00mm	17.50mm	17.42mm	.3140 kg

3 Slot Mount - Double Flange Short High-Cycle Linear Bearing with Brake Holes

Part No.	Series	Color	A	B	C	D	E	F	G	H	J	K	L	M
6535	15	Clear	1.875"	.375"	1.500"	.125"	2.505"	.250"	2.005"	.493"	.748"	.250"	4.000"	2.812"
6535-Black	15	Black	1.875"	.375"	1.500"	.125"	2.505"	.250"	2.005"	.493"	.748"	.250"	4.000"	2.812"
40-6535	40	Clear	50.00mm	9.00mm	41.00mm	2.58mm	65.12mm	6.15mm	52.82mm	12.32mm	19.00mm	6.15mm	103.12mm	75.00mm
40-6535-Black	40	Black	50.00mm	9.00mm	41.00mm	2.58mm	65.12mm	6.15mm	52.82mm	12.32mm	19.00mm	6.15mm	103.12mm	75.00mm
45-6525	45	Clear	56.40mm	9.50mm	46.90mm	2.02mm	70.44mm	6.40mm	57.64mm	12.57mm	24.78mm	7.10mm	120.00mm	80.00mm
45-6525-Black	45	Black	56.40mm	9.50mm	46.90mm	2.02mm	70.44mm	6.40mm	57.64mm	12.57mm	24.78mm	7.10mm	120.00mm	80.00mm

Part No.	Series	N	P	Q	R	S	T	U	V	W	X	Y	Z	Weight
6535	15	1.406"	.656"	.375"	2.000"	1.500"	10-32 FHSCS	.344"	.328"	3.250"	1.500"	.656"	.625"	.665 lb
6535-Black	15	1.406"	.656"	.375"	2.000"	1.500"	10-32 FHSCS	.344"	.328"	3.250"	1.500"	.656"	.625"	.665 lb
40-6535	40	37.50mm	17.50mm	9.50mm	51.56mm	40.00mm	10-32 FHSCS	8.71mm	8.33mm	84.12mm	40.00mm	17.50mm	17.42mm	.3172 kg
40-6535-Black	40	37.50mm	17.50mm	9.50mm	51.56mm	40.00mm	10-32 FHSCS	8.71mm	8.33mm	84.12mm	40.00mm	17.50mm	17.42mm	.3172 kg
45-6525	45	40.00mm	17.50mm	15.00mm	60.00mm	45.00mm	#10 FHSCS	8.74mm	8.33mm	90.00mm	45.00mm	17.50mm	20.48mm	.4073 kg
45-6525-Black	45	40.00mm	17.50mm	15.00mm	60.00mm	45.00mm	#10 FHSCS	8.74mm	8.33mm	90.00mm	45.00mm	17.50mm	20.48mm	.4073 kg

Material Specifications

Material	Alloy*	Process	Finish
Aluminum	6005A-T61	Extrude	Anodize

* Or comparable

3 Slot Mount - Double Flange Long High-Cycle Linear Bearing

Part Description:

The 3 slot mount – double flange long high-cycle linear bearing with or without brake holes is typically used in linear motion applications. It contains special threaded inserts in the pads which provide a heavy-duty bearing capable of withstanding repetitive cycles with sudden acceleration and deceleration. The bearing houses profiles with a minimum of three open T-slots, has a double flange and is a longer option. The pads, screws and shims are included; the pads are made of self-lubricating UHMW. All 80/20 bearings are designed for compression loads only and not intended to support hanging loads.

Fractional

Metric

Black Anodized

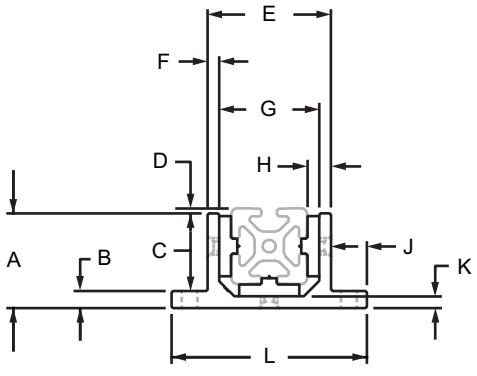

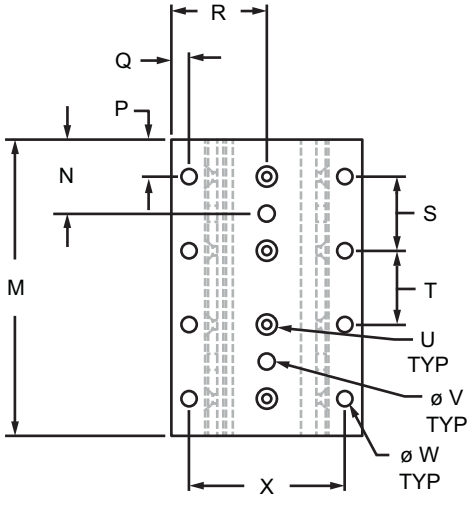

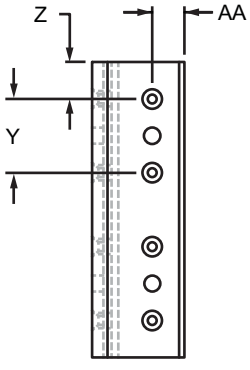

CONTINUE

3 Slot Mount - Double Flange Long High-Cycle Linear Bearing (Continued)

3 Slot Mount - Double Flange Long High-Cycle Linear Bearing

Part No.	Series	Color	A	B	C	D	E	F	G	H	J	K	L	M	N
6836	15	Clear	1.875"	.375"	1.500"	.125"	2.505"	.250"	2.005"	.493"	.748"	.250"	4.000"	6.000"	—
6836-Black	15	Black	1.875"	.375"	1.500"	.125"	2.505"	.250"	2.005"	.493"	.748"	.250"	4.000"	6.000"	
40-6836	40	Clear	50.00mm	9.00mm	41.00mm	2.58mm	65.12mm	6.15mm	52.82mm	12.32mm	19.00mm	6.15mm	103.12mm	160.00mm	
40-6836-Black	40	Black	50.00mm	9.00mm	41.00mm	2.58mm	65.12mm	6.15mm	52.82mm	12.32mm	19.00mm	6.15mm	103.12mm	160.00mm	

Part No.	Series	Color	P	Q	R	S	T	U	V	W	X	Y	Z	AA	Weight
6836	15	Clear	.750"	.375"	2.000"	1.500"	1.500"	10-32 FHSCS	—	.328"	3.250"	1.500"	.750"	.625"	1.425 lb
6836-Black	15	Black	.750"	.375"	2.000"	1.500"	1.500"	10-32 FHSCS		.328"	3.250"	1.500"	.750"	.625"	1.425 lb
40-6836	40	Clear	20.00mm	9.50mm	51.56mm	40.00mm	40.00mm	10-32 FHSCS		8.33mm	84.12mm	40.00mm	20.00mm	17.42mm	.6852 kg
40-6836-Black	40	Black	20.00mm	9.50mm	51.56mm	40.00mm	40.00mm	10-32 FHSCS		8.33mm	84.12mm	40.00mm	20.00mm	17.42mm	.6852 kg

3 Slot Mount - Double Flange Long High-Cycle Linear Bearing with Brake Holes

Part No.	Series	Color	A	B	C	D	E	F	G	H	J	K	L	M	N
6536	15	Clear	1.875"	.375"	1.500"	.125"	2.505"	.250"	2.005"	.493"	.748"	.250"	4.000"	6.000"	1.500"
6536-Black	15	Black	1.875"	.375"	1.500"	.125"	2.505"	.250"	2.005"	.493"	.748"	.250"	4.000"	6.000"	1.500"
40-6536	40	Clear	50.00mm	9.00mm	41.00mm	2.58mm	65.12mm	6.15mm	52.82mm	12.32mm	19.00mm	6.15mm	103.12mm	160.00mm	40.00mm
40-6536-Black	40	Black	50.00mm	9.00mm	41.00mm	2.58mm	65.12mm	6.15mm	52.82mm	12.32mm	19.00mm	6.15mm	103.12mm	160.00mm	40.00mm
45-6526	45	Clear	56.40mm	9.50mm	46.90mm	2.02mm	70.44mm	6.40mm	57.64mm	12.57mm	24.78mm	7.10mm	120.00mm	170.00mm	40.00mm
45-6526-Black	45	Black	56.40mm	9.50mm	46.90mm	2.02mm	70.44mm	6.40mm	57.64mm	12.57mm	24.78mm	7.10mm	120.00mm	170.00mm	40.00mm

Part No.	Series	Color	P	Q	R	S	T	U	V	W	X	Y	Z	AA	Weight
6536	15	Clear	.750"	.375"	2.000"	1.500"	1.500"	10-32 FHSCS	.344"	.328"	3.250"	1.500"	.750"	.625"	1.408 lb
6536-Black	15	Black	.750"	.375"	2.000"	1.500"	1.500"	10-32 FHSCS	.344"	.328"	3.250"	1.500"	.750"	.625"	1.408 lb
40-6536	40	Clear	20.00mm	9.50mm	51.56mm	40.00mm	40.00mm	10-32 FHSCS	8.71mm	8.33mm	84.12mm	40.00mm	20.00mm	17.42mm	.6814 kg
40-6536-Black	40	Black	20.00mm	9.50mm	51.56mm	40.00mm	40.00mm	10-32 FHSCS	8.71mm	8.33mm	84.12mm	40.00mm	20.00mm	17.42mm	.6814 kg
45-6526	45	Clear	17.50mm	15.00mm	60.00mm	45.00mm	45.00mm	#10 FHSCS	8.74mm	8.33mm	90.00mm	45.00mm	17.50mm	20.48mm	.8587 kg
45-6526-Black	45	Black	17.50mm	15.00mm	60.00mm	45.00mm	45.00mm	#10 FHSCS	8.74mm	8.33mm	90.00mm	45.00mm	17.50mm	20.48mm	.8587 kg

Material Specifications

Material	Alloy*	Process	Finish
Aluminum	6005A-T61	Extrude	Anodize

* Or comparable

4 Slot Mount - Double Flange Short High-Cycle Linear Bearing

Part Description:

The 4 slot mount – double flange short high-cycle linear bearing with or without brake holes is typically used in linear motion applications. It contains special threaded inserts in the pads which provide a heavy-duty bearing capable of withstanding repetitive cycles with sudden acceleration and deceleration. The bearing houses profiles with a minimum of four open T-slots, has a double flange and is a shorter option. The pads, screws and shims are included; the pads are made of self-lubricating UHMW. All 80/20 bearings are designed for compression loads only and not intended to support hanging loads.

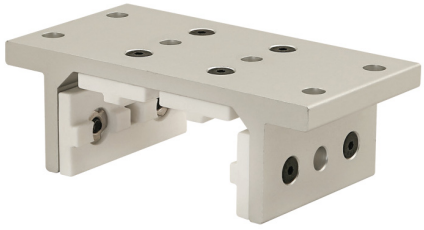

Fractional

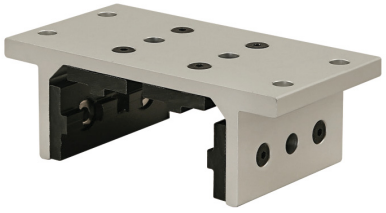

Metric

Black Anodized

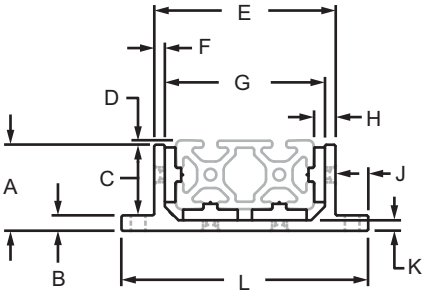

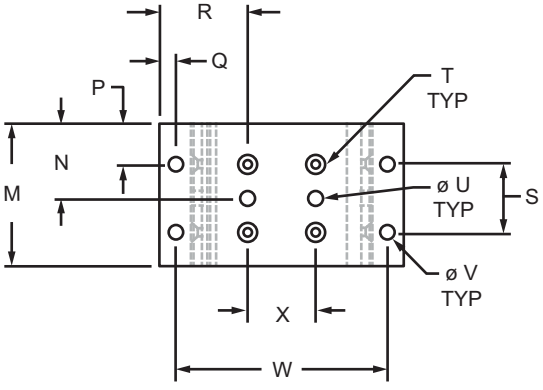

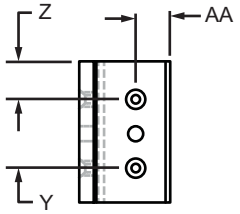

CONTINUE

4 Slot Mount - Double Flange Short High-Cycle Linear Bearing

Part No.	Series	Color	A	B	C	D	E	F	G	H	J	K	L	M	N
6833	15	Clear	1.875"	.375"	1.500"	.125"	4.005"	.250"	3.505"	.493"	.748"	.250"	5.500"	2.812"	—
6833-Black	15	Black	1.875"	.375"	1.500"	.125"	4.005"	.250"	3.505"	.493"	.748"	.250"	5.500"	2.812"	
40-6833	40	Clear	50.00mm	9.00mm	41.00mm	2.58mm	105.31mm	6.15mm	93.01mm	12.32mm	19.00mm	6.15mm	143.31mm	75.00mm	
40-6833-Black	40	Black	50.00mm	9.00mm	41.00mm	2.58mm	105.31mm	6.15mm	93.01mm	12.32mm	19.00mm	6.15mm	143.31mm	75.00mm	

Part No.	Series	Color	P	Q	R	S	T	U	V	W	X	Y	Z	AA	Weight
6833	15	Clear	.656"	2.000"	.375"	1.500"	10-32 FHSCS	—	.328"	4.750"	1.500"	1.500"	.656"	.625"	.818 lb
6833-Black	15	Black	.656"	2.000"	.375"	1.500"	10-32 FHSCS		.328"	4.750"	1.500"	1.500"	.656"	.625"	.818 lb
40-6833	40	Clear	17.50mm	51.66mm	9.50mm	40.00mm	10-32 FHSCS		8.33mm	124.31mm	40.00mm	40.00mm	17.50mm	17.42mm	.3842 kg
40-6833-Black	40	Black	17.50mm	51.66mm	9.50mm	40.00mm	10-32 FHSCS		8.33mm	124.31mm	40.00mm	40.00mm	17.50mm	17.42mm	.3842 kg

4 Slot Mount - Double Flange Short High-Cycle Linear Bearing with Brake Holes

Part No.	Series	Color	A	B	C	D	E	F	G	H	J	K	L	M	N
6533	15	Clear	1.875"	.375"	1.500"	.125"	4.005"	.250"	3.505"	.493"	.748"	.250"	5.500"	2.812"	1.406"
6533-Black	15	Black	1.875"	.375"	1.500"	.125"	4.005"	.250"	3.505"	.493"	.748"	.250"	5.500"	2.812"	1.406"
40-6533	40	Clear	50.00mm	9.00mm	41.00mm	2.58mm	105.31mm	6.15mm	93.01mm	12.32mm	19.00mm	6.15mm	143.31mm	75.00mm	37.50mm
40-6533-Black	40	Black	50.00mm	9.00mm	41.00mm	2.58mm	105.31mm	6.15mm	93.01mm	12.32mm	19.00mm	6.15mm	143.31mm	75.00mm	37.50mm

Part No.	Series	Color	P	Q	R	S	T	U	V	W	X	Y	Z	AA	Weight
6533	15	Clear	.656"	2.000"	.375"	1.500"	10-32 FHSCS	.343"	.328"	4.750"	1.500"	1.500"	.656"	.625"	.808 lb
6533-Black	15	Black	.656"	2.000"	.375"	1.500"	10-32 FHSCS	.343"	.328"	4.750"	1.500"	1.500"	.656"	.625"	.808 lb
40-6533	40	Clear	17.50mm	51.66mm	9.50mm	40.00mm	10-32 FHSCS	8.71mm	8.33mm	124.31mm	40.00mm	40.00mm	17.50mm	17.42mm	.3916 kg
40-6533-Black	40	Black	17.50mm	51.66mm	9.50mm	40.00mm	10-32 FHSCS	8.71mm	8.33mm	124.31mm	40.00mm	40.00mm	17.50mm	17.42mm	.3916 kg

Material Specifications

Material	Alloy*	Process	Finish
Aluminum	6105-T5	Extrude	Anodize

* Or comparable

4 Slot Mount - Double Flange Long High-Cycle Linear Bearing

Part Description:

The 4 slot mount – double flange long high-cycle linear bearing with or without brake holes is typically used in linear motion applications. It contains special threaded inserts in the pads which provide a heavy-duty bearing capable of withstanding repetitive cycles with sudden acceleration and deceleration. The bearing houses profiles with a minimum of four open T-slots, has a double flange and is a longer option. The pads, screws and shims are included; the pads are made of self-lubricating UHMW. All 80/20 bearings are designed for compression loads only and not intended to support hanging loads.

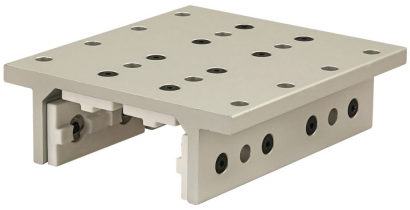

Fractional

Metric

Black Anodized

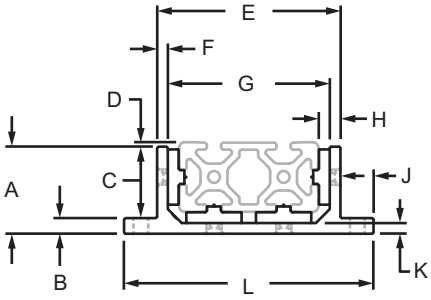

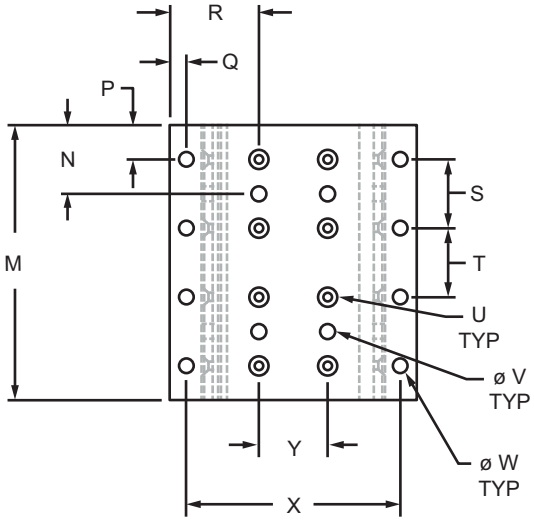

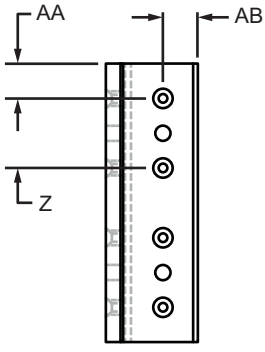

CONTINUE

4 Slot Mount - Double Flange Long High-Cycle Linear Bearing

Part No.	Series	Color	A	B	C	D	E	F	G	H	J	K	L	M	N
6834	15	Clear	1.875"	.375"	1.500"	.125"	4.005"	.250"	3.505"	.493"	.748"	.250"	5.500"	6.000"	—
6834-Black	15	Black	1.875"	.375"	1.500"	.125"	4.005"	.250"	3.505"	.493"	.748"	.250"	5.500"	6.000"	
40-6834	40	Clear	50.00mm	9.00mm	41.00mm	2.58mm	105.31mm	6.15mm	93.01mm	12.32mm	19.00mm	6.15mm	143.31mm	160.00mm	
40-6834-Black	40	Black	50.00mm	9.00mm	41.00mm	2.58mm	105.31mm	6.15mm	93.01mm	12.32mm	19.00mm	6.15mm	143.31mm	160.00mm	

Part No.	Series	P	Q	R	S	T	U	V	W	X	Y	Z	AA	AB	Weight
6834	15	.750"	.375"	2.000"	1.500"	1.500"	10-32 FHSCS	—	.328"	4.750"	1.500"	1.500"	.750"	.625"	1.727 lb
6834-Black	15	.750"	.375"	2.000"	1.500"	1.500"	10-32 FHSCS		.328"	4.750"	1.500"	1.500"	.750"	.625"	1.727 lb
40-6834	40	20.00mm	9.50mm	51.66mm	40.00mm	40.00mm	10-32 FHSCS		8.33mm	124.31mm	40.00mm	40.00mm	20.00mm	17.42mm	.8142 kg
40-6834-Black	40	20.00mm	9.50mm	51.66mm	40.00mm	40.00mm	10-32 FHSCS		8.33mm	124.31mm	40.00mm	40.00mm	20.00mm	17.42mm	.8142 kg

4 Slot Mount - Double Flange Long High-Cycle Linear Bearing with Brake Holes

Part No.	Series	Color	A	B	C	D	E	F	G	H	J	K	L	M	N
6534	15	Clear	1.875"	.375"	1.500"	.125"	4.005"	.250"	3.505"	.493"	.748"	.250"	5.500"	6.000"	1.500"
6534-Black	15	Black	1.875"	.375"	1.500"	.125"	4.005"	.250"	3.505"	.493"	.748"	.250"	5.500"	6.000"	1.500"
40-6534	40	Clear	50.00mm	9.00mm	41.00mm	2.58mm	105.31mm	6.15mm	93.01mm	12.32mm	19.00mm	6.15mm	143.31mm	160.00mm	40.00mm
40-6534-Black	40	Black	50.00mm	9.00mm	41.00mm	2.58mm	105.31mm	6.15mm	93.01mm	12.32mm	19.00mm	6.15mm	143.31mm	160.00mm	40.00mm

Part No.	Series	P	Q	R	S	T	U	V	W	X	Y	Z	AA	AB	Weight
6534	15	.750"	.375"	2.000"	1.500"	1.500"	10-32 FHSCS	.343"	.328"	4.750"	1.500"	1.500"	.750"	.625"	1.706 lb
6534-Black	15	.750"	.375"	2.000"	1.500"	1.500"	10-32 FHSCS	.343"	.328"	4.750"	1.500"	1.500"	.750"	.625"	1.706 lb
40-6534	40	20.00mm	9.50mm	51.66mm	40.00mm	40.00mm	10-32 FHSCS	8.71mm	8.33mm	124.31mm	40.00mm	40.00mm	20.00mm	17.42mm	.8204 kg
40-6534-Black	40	20.00mm	9.50mm	51.66mm	40.00mm	40.00mm	10-32 FHSCS	8.71mm	8.33mm	124.31mm	40.00mm	40.00mm	20.00mm	17.42mm	.8204 kg

Material Specifications

Material	Alloy*	Process	Finish
Aluminum	6105-T5	Extrude	Anodize

* Or comparable

Single Short UniBearing™

Part Description:

The single short UniBearing™ has an open design that enables customized layouts. It is an option that is commonly used in applications with one guiderail. The UniBearing™ is easy to quickly install or remove without taking it apart, allowing reduced retooling and downtime and increased productivity and flexibility. The pads are mounted using stainless steel flathead socket cap screws that secure it to the housing and eliminate the need for high-cycle pads. The bearing can move or be fixed; when fixed, it allows the guardrail and assembly to move. All UniBearings™ come with pre-drilled brake holes and tapped mounting holes that enable attachment of accessories to a flat surface.

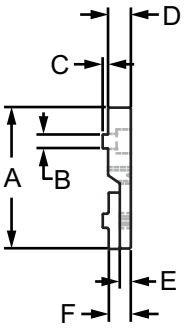

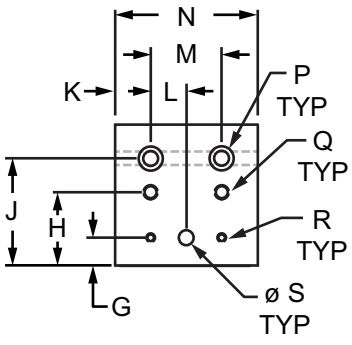

Part No.	Series	Color	A	B	C	D	E	F	G	H	J
6760	10	Clear	2.063"	.244"	.060"	.312"	.156"	.306"	.398"	1.063"	1.563"
6760-Black	10	Black	2.063"	.244"	.060"	.312"	.156"	.306"	.398"	1.063"	1.563"
6860	15	Clear	3.125"	.309"	.120"	.505"	.245"	.485"	.616"	1.625"	2.375"
6860-Black	15	Black	3.125"	.309"	.120"	.505"	.245"	.485"	.616"	1.625"	3.375"
25-6760	25	Clear	52.40mm	6.20mm	1.52mm	7.92mm	3.96mm	7.77mm	10.11mm	27.00mm	39.70mm
25-6760-Black	25	Black	52.40mm	6.20mm	1.52mm	7.92mm	3.96mm	7.77mm	10.11mm	27.00mm	39.70mm
40-6860	40	Clear	82.45mm	7.85mm	3.05mm	12.83mm	6.22mm	12.32mm	15.78mm	42.45mm	62.39mm
40-6860-Black	40	Black	82.45mm	7.85mm	3.05mm	12.83mm	6.22mm	12.32mm	15.78mm	42.45mm	62.39mm

			K	L	M	N	P	Q	R	S	Weight
6760	10	Clear	.437"	.500"	1.000"	1.875"	1/4-20 SHCS	1/4-20	8-32	.257"	.129 lb
6760-Black	10	Black	.437"	.500"	1.000"	1.875"	1/4-20 SHCS	1/4-20	8-32	.257"	.129 lb
6860	15	Clear	.656"	.750"	1.500"	2.812"	5/16 SHCS	5/16-18	10-24	.328"	.449 lb
6860-Black	15	Black	.656"	.750"	1.500"	2.812"	5/16 SHCS	5/16-18	10-24	.328"	.449 lb
25-6760	25	Clear	11.00mm	12.50mm	25.00mm	47.00mm	M6 SHCS	M6 x 1.0	8-32	6.30mm	.0611 kg
25-6760-Black	25	Black	11.00mm	12.50mm	25.00mm	47.00mm	M6 SHCS	M6 x 1.0	8-32	6.30mm	.0611 kg
40-6860	40	Clear	17.50mm	20.00mm	40.00mm	75.00mm	M8 SHCS	M8 x 1.25	10-24	8.33mm	.2157 kg
40-6860-Black	40	Black	17.50mm	20.00mm	40.00mm	75.00mm	M8 SHCS	M8 x 1.25	10-24	8.33mm	.2157 kg

Material Specifications

Material	Alloy*	Process	Finish
Aluminum	6105-T5	Extrude	Anodize

* Or comparable

Included Hardware (Mount to T-Slot)

Series	Part No.	Qty.	Bolt	Part No.	Qty.	T-Nut
10	3058	2	1/4-20 x 3/8" SHCS	3280	1	Double Slide-in Economy
15	3110	2	5/16-18 x 5/8" SHCS	3279	1	Double Slide-in Economy
25	13-6508	2	M6 x 8mm SHCS	25-1962	1	Double Slide-in Economy
40	13-8516	2	M8 x 16mm SHCS	40-1982	1	Double Slide-in Economy

Part Description:

The single long UniBearing™ has an open design that enables customized layouts. It is an option that is commonly used in applications with one guiderail. The UniBearing™ is easy to quickly install or remove without taking it apart, allowing reduced retooling and downtime and increased productivity and flexibility. The pads are mounted using stainless steel flathead socket cap screws that secure it to the housing and eliminate the need for high-cycle pads. The bearing can move or be fixed; when fixed, it allows the guardrail and assembly to move. All UniBearings™ come with pre-drilled brake holes and tapped mounting holes that enable attachment of accessories to a flat surface.

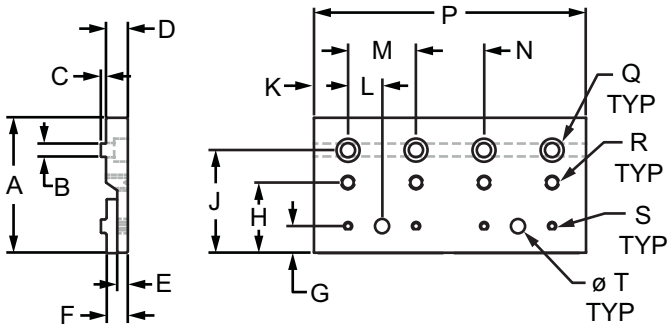

Part No.	Series	Color	A	B	C	D	E	F	G	H	J
6762	10	Clear	2.063"	.244"	.060"	.312"	.156"	.306"	.398"	1.063"	1.563"
6762-Black	10	Black	2.063"	.244"	.060"	.312"	.156"	.306"	.398"	1.063"	1.563"
6862	15	Clear	3.125"	.309"	.120"	.505"	.245"	.485"	.616"	1.625"	2.375"
6862-Black	15	Black	3.125"	.309"	.120"	.505"	.245"	.485"	.616"	1.625"	2.375"
25-6762	25	Clear	52.40mm	6.20mm	1.52mm	7.92mm	3.96mm	7.77mm	10.11mm	27.00mm	39.70mm
25-6762-Black	25	Black	52.40mm	6.20mm	1.52mm	7.92mm	3.96mm	7.77mm	10.11mm	27.00mm	39.70mm
40-6862	40	Clear	82.45mm	7.85mm	3.05mm	12.83mm	6.22mm	12.32mm	15.78mm	42.45mm	62.39mm
40-6862-Black	40	Black	82.45mm	7.85mm	3.05mm	12.83mm	6.22mm	12.32mm	15.78mm	42.45mm	62.39mm

		K	L	M	N	P	Q	R	S	T	Weight
6762	10	.437"	.500"	1.000"	1.000"	4.000"	1/4-20 SHCS	1/4-20	8-32	.257"	.265 lb
6762-Black	10	.437"	.500"	1.000"	1.000"	4.000"	1/4-20 SHCS	1/4-20	8-32	.257"	.265 lb
6862	15	.750"	.750"	1.500"	1.500"	6.000"	5/16 SHCS	5/16-18	10-24	.328"	.933 lb
6862-Black	15	.750"	.750"	1.500"	1.500"	6.000"	5/16 SHCS	5/16-18	10-24	.328"	.933 lb
25-6762	25	12.50mm	12.50mm	25.00mm	25.00mm	100.00mm	M6 SHCS	M6 x 1.0	8-32	6.30mm	.1240 kg
25-6762-Black	25	12.50mm	12.50mm	25.00mm	25.00mm	100.00mm	M6 SHCS	M6 x 1.0	8-32	6.30mm	.1240 kg
40-6862	40	20.00mm	20.00mm	40.00mm	40.00mm	160.00mm	M8 SHCS	M8 x 1.25	10-24	8.33mm	.4522 kg
40-6862-Black	40	20.00mm	20.00mm	40.00mm	40.00mm	160.00mm	M8 SHCS	M8 x 1.25	10-24	8.33mm	.4522 kg

Material Specifications

Material	Alloy*	Process	Finish
Aluminum	6105-T5	Extrude	Anodize

* Or comparable

Included Hardware (Mount to T-Slot)

Series	Part No.	Qty.	Bolt	Part No.	Qty.	T-Nut
10	3058	4	1/4-20 x 3/8" SHCS	3280	2	Double Slide-in Economy
15	3110	4	5/16-18 x 5/8" SHCS	3279	2	Double Slide-in Economy
25	13-6508	4	M6 x 8mm SHCS	25-1962	2	Double Slide-in Economy
40	13-8516	4	M8 x 16mm SHCS	40-1982	2	Double Slide-in Economy

Double Short UniBearing™

Part Description:

The double short UniBearing™ has an open design that enables customized layouts. It is an option that is commonly used in applications with two guiderails. The UniBearing™ is easy to quickly install or remove without taking it apart, allowing reduced retooling and downtime and increased productivity and flexibility. The pads are mounted using stainless steel flathead socket cap screws that secure it to the housing and eliminate the need for high-cycle pads. The bearing can move or be fixed; when fixed, it allows the guardrail and assembly to move. All UniBearings™ come with pre-drilled brake holes and tapped mounting holes that enable attachment of accessories to a flat surface.

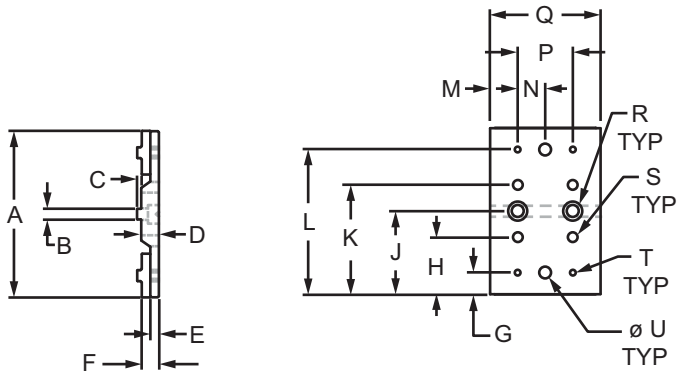

Part No.	Series	Color	A	B	C	D	E	F	G	H	J	K
6764	10	Clear	3.125"	.244"	.060"	.312"	.156"	.306"	.397"	1.063"	1.563"	2.063"
6764-Black	10	Black	3.125"	.244"	.060"	.312"	.156"	.306"	.397"	1.063"	1.563"	2.063"
6864	15	Clear	4.750"	.308"	.120"	.505"	.245"	.485"	.616"	1.625"	2.375"	3.125"
6864-Black	15	Black	4.750"	.308"	.120"	.505"	.245"	.485"	.616"	1.625"	2.375"	3.125"
25-6764	25	Clear	79.38mm	6.20mm	1.52mm	7.92mm	3.96mm	7.77mm	10.08mm	27.00mm	39.70mm	52.40mm
25-6764-Black	25	Black	79.38mm	6.20mm	1.52mm	7.92mm	3.96mm	7.77mm	10.08mm	27.00mm	39.70mm	52.40mm
40-6864	40	Clear	124.78mm	7.82mm	3.05mm	12.83mm	6.22mm	12.32mm	15.78mm	42.45mm	62.39mm	82.33mm
40-6864-Black	40	Black	124.78mm	7.82mm	3.05mm	12.83mm	6.22mm	12.32mm	15.78mm	42.45mm	62.39mm	82.33mm

Part No.	Series	Color	L	M	N	P	Q	R	S	T	U	Weight
6764	10	Clear	2.728"	.437"	.500"	1.000"	1.875"	1/4-20 SHCS	1/4-20	8-32	.257"	.173 lb
6764-Black	10	Black	2.728"	.437"	.500"	1.000"	1.875"	1/4-20 SHCS	1/4-20	8-32	.257"	.173 lb
6864	15	Clear	4.134"	.656"	.750"	1.500"	2.812"	5/16 SHCS	5/16-18	10-24	.328"	.588 lb
6864-Black	15	Black	4.134"	.656"	.750"	1.500"	2.812"	5/16 SHCS	5/16-18	10-24	.328"	.588 lb
25-6764	25	Clear	69.29mm	11.00mm	12.50mm	25.00mm	47.00mm	M6 SHCS	M6 x 1.0	8-32	6.30mm	.0819 kg
25-6764-Black	25	Black	69.29mm	11.00mm	12.50mm	25.00mm	47.00mm	M6 SHCS	M6 x 1.0	8-32	6.30mm	.0819 kg
40-6864	40	Clear	109.00mm	17.50mm	20.00mm	40.00mm	75.00mm	M8 SHCS	M8 x 1.25	10-24	8.33mm	.2840 kg
40-6864-Black	40	Black	109.00mm	17.50mm	20.00mm	40.00mm	75.00mm	M8 SHCS	M8 x 1.25	10-24	8.33mm	.2840 kg

Material Specifications

Material	Alloy*	Process	Finish
Aluminum	6105-T5	Extrude	Anodized

* Or comparable

Included Hardware (Mount to T-Slot)

Series	Part No.	Qty.	Bolt	Part No.	Qty.	T-Nut
10	3058	2	1/4-20 x 3/8" SHCS	3280	1	Double Slide-in Economy
15	3110	2	5/16-18 x 5/8" SHCS	3279	1	Double Slide-in Economy
25	13-6508	2	M6 x 8mm SHCS	25-1962	1	Double Slide-in Economy
40	13-8516	2	M8 x 16mm SHCS	40-1982	1	Double Slide-in Economy

Part Description:

The double long UniBearing™ has an open design that enables customized layouts. It is an option that is commonly used in applications with two guiderails. The UniBearing™ is easy to quickly install or remove without taking it apart, allowing reduced retooling and downtime and increased productivity and flexibility. The pads are mounted using stainless steel flathead socket cap screws that secure it to the housing and eliminate the need for high-cycle pads. The bearing can move or be fixed; when fixed, it allows the guardrail and assembly to move. All UniBearings™ come with pre-drilled brake holes and tapped mounting holes that enable attachment of accessories to a flat surface.

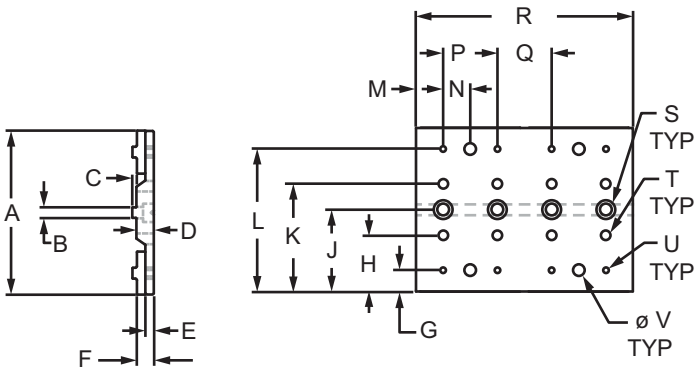

Part No.	Series	Color	A	B	C	D	E	F	G	H	J	K
6766	10	Clear	3.125"	.244"	.060"	.312"	.156"	.306"	.397"	1.063"	1.563"	2.063"
6766-Black	10	Black	3.125"	.244"	.060"	.312"	.156"	.306"	.397"	1.063"	1.563"	2.063"
6866	15	Clear	4.750"	.308"	.120"	.505"	.245"	.485"	.616"	1.625"	2.375"	3.125"
6866-Black	15	Black	4.750"	.308"	.120"	.505"	.245"	.485"	.616"	1.625"	2.375"	3.125"
25-6766	25	Clear	79.38mm	6.20mm	1.52mm	7.92mm	3.96mm	7.77mm	10.08mm	27.00mm	39.70mm	52.40mm
25-6766-Black	25	Black	79.38mm	6.20mm	1.52mm	7.92mm	3.96mm	7.77mm	10.08mm	27.00mm	39.70mm	52.40mm
40-6866	40	Clear	124.78mm	7.82mm	3.05mm	12.83mm	6.22mm	12.32mm	15.78mm	42.45mm	62.39mm	82.33mm
40-6866-Black	40	Black	124.78mm	7.82mm	3.05mm	12.83mm	6.22mm	12.32mm	15.78mm	42.45mm	62.39mm	82.33mm

	L	M	N	P	Q	R	S	T	U	V	Weight
6766	2.728"	.500"	.500"	1.000"	1.000"	4.000"	1/4-20 SHCS	1/4-20	8-32	.257"	.359 lb
6766-Black	2.728"	.500"	.500"	1.000"	1.000"	4.000"	1/4-20 SHCS	1/4-20	8-32	.257"	.359 lb
6866	4.134"	.750"	.750"	1.500"	1.500"	6.000"	5/16 SHCS	5/16-18	10-24	.328"	1.272 lb
6866-Black	4.134"	.750"	.750"	1.500"	1.500"	6.000"	5/16 SHCS	5/16-18	10-24	.328"	1.272 lb
25-6766	69.29mm	12.50mm	12.50mm	25.00mm	25.00mm	100.00mm	M6 SHCS	M6 x 1.0	8-32	6.30mm	.1641 kg
25-6766-Black	69.29mm	12.50mm	12.50mm	25.00mm	25.00mm	100.00mm	M6 SHCS	M6 x 1.0	8-32	6.30mm	.1641 kg
40-6866	109.00mm	20.00mm	20.00mm	40.00mm	40.00mm	160.00mm	M8 SHCS	M8 x 1.25	10-24	8.33mm	.5973 kg
40-6866-Black	109.00mm	20.00mm	20.00mm	40.00mm	40.00mm	160.00mm	M8 SHCS	M8 x 1.25	10-24	8.33mm	.5973 kg

Material Specifications

Material	Alloy*	Process	Finish
Aluminum	6105-T5	Extrude	Anodize

* Or comparable

Included Hardware (Mount to T-Slot)

Series	Part No.	Qty.	Bolt	Part No.	Qty.	T-Nut
10	3058	4	1/4-20 x 3/8" SHCS	3280	2	Double Slide-in Economy
15	3110	4	5/16-18 x 5/8" SHCS	3279	2	Double Slide-in Economy
25	13-6508	4	M6 x 8mm SHCS	25-1962	2	Double Slide-in Economy
40	13-8516	4	M8 x 16mm SHCS	40-1982	2	Double Slide-in Economy

Short - Single Mount Unibearing™ Assembly

Part Description:

The short – single mount UniBearing™ assembly is commonly used for linear motion applications and is comprised of a short single mount UniBearing™ that is attached to a T-slot profile. There are pre-tapped holes in the profile ends as well as in the housing unit for connecting accessories. Shim kits are included.

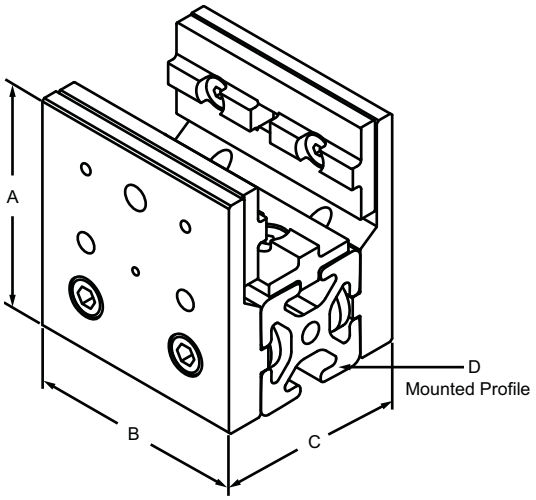

Fractional

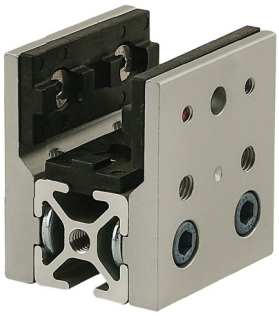

Metric

Part No.	Series	Material	Alloy*	Finish	Process	Color	A	B	C	D	Weight
6730	10	Aluminum	6105-T5	Anodize	Extrude	Clear	2.063"	1.875"	1.624"	1010	.378 lb
6730-Black	10					Black	2.063"	1.875"	1.624"	1010	.378 lb
6731	10					Clear	2.063"	1.875"	2.624"	1020	.467 lb
6731-Black	10					Black	2.063"	1.875"	2.624"	1020	.467 lb
6870	15					Clear	3.125"	2.812"	2.510"	1515	1.330 lb
6870-Black	15					Black	3.125"	2.812"	2.510"	1515	1.330 lb
6871	15					Clear	3.125"	2.812"	4.010"	1530	1.682 lb
6871-Black	15					Black	3.125"	2.812"	4.010"	1530	1.682 lb
6872	15					Clear	3.125"	2.812"	5.510"	1545	2.036 lb
6872-Black	15					Black	3.125"	2.812"	5.510"	1545	2.036 lb
25-6730	25					Clear	52.40mm	47.00mm	40.85mm	25-2525	.1600 kg
25-6730-Black	25					Black	52.40mm	47.00mm	40.85mm	25-2525	.1600 kg
25-6731	25					Clear	52.40mm	47.00mm	65.85mm	25-2550	.2070 kg
25-6731-Black	25					Black	52.40mm	47.00mm	65.85mm	25-2550	.2070 kg
40-6870	40					Clear	82.45mm	75.00mm	65.66mm	40-4040	.6550 kg
40-6870-Black	40					Black	82.45mm	75.00mm	65.66mm	40-4040	.6550 kg
40-6871	40					Clear	82.45mm	75.00mm	105.66mm	40-4080	.7919 kg
40-6871-Black	40					Black	82.45mm	75.00mm	105.66mm	40-4080	.7919 kg

* Or comparable

Included Hardware (Mount to T-Slot)

Series	Part No.	Qty.	Bolt	Part No.	Qty.	T-Nut
10	3058	4	1/4-20 x 3/8" SHCS	3280	2	Double Slide-in Economy
15	3110	4	5/16-18 x 5/8" SHCS	3279	2	Double Slide-in Economy
25	13-6508	4	M6 x 8mm SHCS	25-1962	2	Double Slide-in Economy
40	13-8516	4	M8 x 16mm SHCS	40-1982	2	Double Slide-in Economy

Part Description:

The long – single mount UniBearing™ assembly is commonly used for linear motion applications and is comprised of a long single mount UniBearing™ that is attached to a T-slot profile. There are pre-tapped holes in the profile ends as well as in the housing unit for connecting accessories. Shim kits are included.

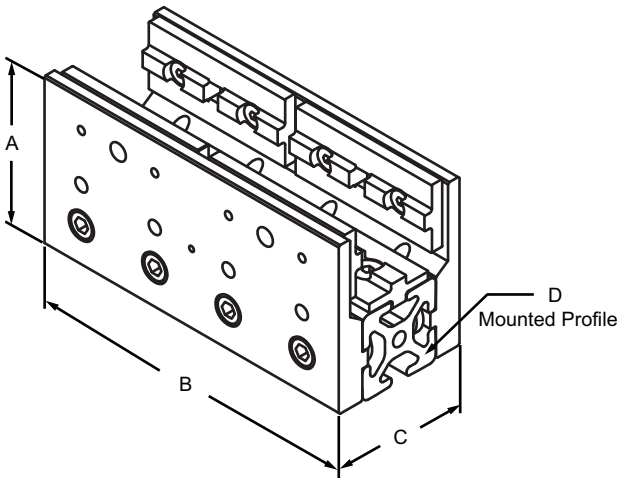

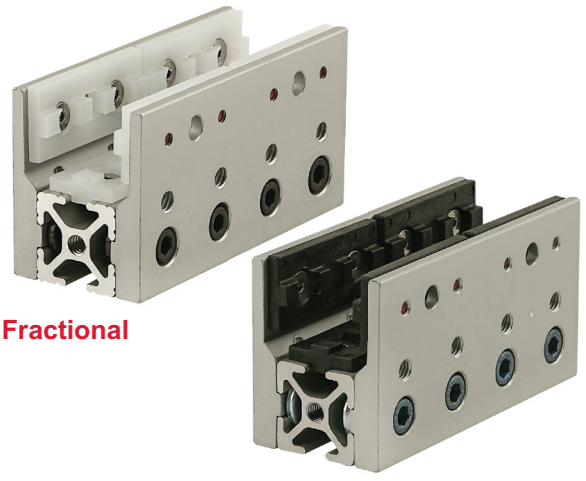

Fractional

Metric

Part No.	Series	Material	Alloy*	Finish	Process	Color	A	B	C	D	Weight
6732	10	Aluminum	6105-T5	Anodize	Extrude	Clear	2.063"	4.000"	1.624"	1010	.771 lb
6732-Black	10					Black	2.063"	4.000"	1.624"	1010	.771 lb
6733	10					Clear	2.063"	4.000"	2.624"	1020	.969 lb
6733-Black	10					Black	2.063"	4.000"	2.624"	1020	.969 lb
6873	15					Clear	3.125"	6.000"	2.510"	1515	2.751 lb
6873-Black	15					Black	3.125"	6.000"	2.510"	1515	2.751 lb
6874	15					Clear	3.125"	6.000"	4.010"	1530	3.518 lb
6874-Black	15					Black	3.125"	6.000"	4.010"	1530	3.518 lb
6875	15					Clear	3.125"	6.000"	5.510"	1545	5.030 lb
6875-Black	15					Black	3.125"	6.000"	5.510"	1545	5.030 lb
25-6732	25					Clear	52.40mm	100.00mm	40.85mm	25-2525	.3394 kg
25-6732-Black	25					Black	52.40mm	100.00mm	40.85mm	25-2525	.3394 kg
25-6733	25					Clear	52.40mm	100.00mm	65.85mm	25-2550	.4277 kg
25-6733-Black	25					Black	52.40mm	100.00mm	65.85mm	25-2550	.4277 kg
40-6873	40					Clear	82.45mm	160.00mm	65.66mm	40-4040	1.3290 kg
40-6873-Black	40					Black	82.45mm	160.00mm	65.66mm	40-4040	1.3290 kg
40-6874	40					Clear	82.45mm	160.00mm	105.66mm	40-4080	1.6720 kg
40-6874-Black	40					Black	82.45mm	160.00mm	105.66mm	40-4080	1.6720 kg

* Or comparable

Included Hardware (Mount to T-Slot)

Series	Part No.	Qty.	Bolt	Part No.	Qty.	T-Nut
10	3058	8	1/4-20 x 3/8" SHCS	3280	4	Double Slide-in Economy
15	3110	8	5/16-18 x 5/8" SHCS	3279	4	Double Slide-in Economy
25	13-6508	8	M6 x 8mm SHCS	25-1962	4	Double Slide-in Economy
40	13-8516	8	M8 x 16mm SHCS	40-1982	4	Double Slide-in Economy

Short - Double Mount Unibearing™ Assembly

80/20 Inc.

Part Description:

The short – double mount UniBearing™ assembly is commonly used for linear motion applications and is comprised of a short double mount UniBearing™ that is attached to a T-slot profile. There are pre-tapped holes in the profile ends as well as in the housing unit for connecting accessories. Shim kits are included.

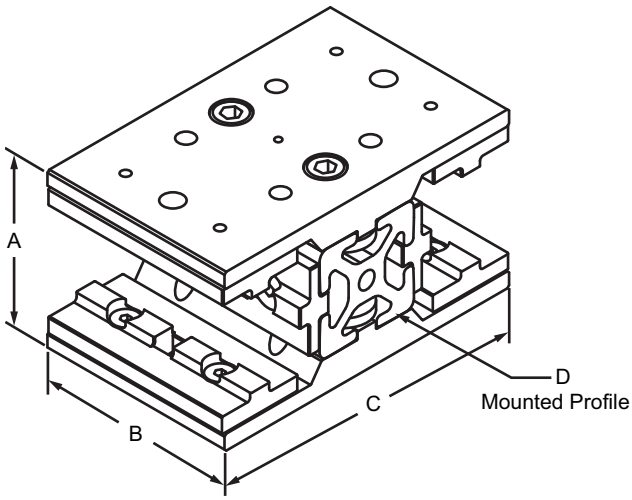

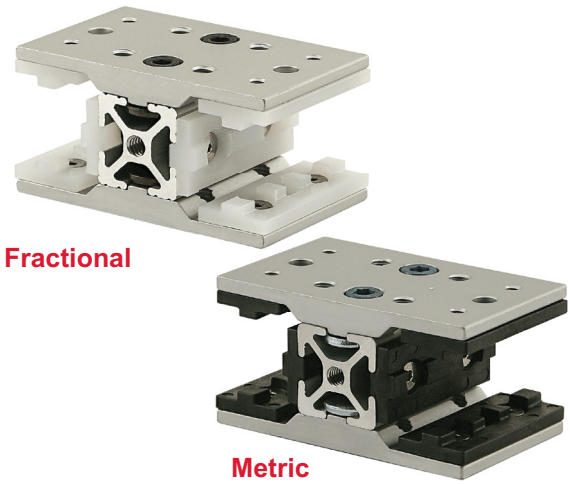

Part No.	Series	Material	Alloy*	Finish	Process	Color	A	B	C	D	Weight
6734	10	Aluminum	6105-T5	Anodize	Extrude	Clear	1.624"	1.875"	3.125"	1010	.485 lb
6734-Black	10					Black	1.624"	1.875"	3.125"	1010	.485 lb
6735	10					Clear	2.624"	1.875"	3.125"	1020	.609 lb
6735-Black	10					Black	2.624"	1.875"	3.125"	1020	.609 lb
6876	15					Clear	2.510"	2.812"	4.750"	1515	1.791 lb
6876-Black	15					Black	2.510"	2.812"	4.750"	1515	1.791 lb
6877	15					Clear	4.010"	2.812"	4.750"	1530	1.860 lb
6877-Black	15					Black	4.010"	2.812"	4.750"	1530	1.860 lb
6878	15					Clear	5.510"	2.812"	4.750"	1545	2.196 lb
6878-Black	15					Black	5.510"	2.812"	4.750"	1545	2.196 lb
25-6734	25					Clear	40.85mm	47.00mm	79.38mm	25-2525	.2128 kg
25-6734-Black	25					Black	40.85mm	47.00mm	79.38mm	25-2525	.2128 kg
25-6735	25					Clear	65.85mm	47.00mm	79.38mm	25-2550	.2692 kg
25-6735-Black	25					Black	65.85mm	47.00mm	79.38mm	25-2550	.2692 kg
40-6876	40					Clear	65.66mm	75.00mm	124.78mm	40-4040	.9020 kg
40-6876-Black	40					Black	65.66mm	75.00mm	124.78mm	40-4040	.9020 kg
40-6877	40					Clear	105.66mm	75.00mm	124.78mm	40-4080	1.0970 kg
40-6877-Black	40					Black	105.66mm	75.00mm	124.78mm	40-4080	1.0970 kg

* Or comparable

Included Hardware (Mount to T-Slot)

Series	Part No.	Qty.	Bolt	Part No.	Qty.	T-Nut
10	3058	4	1/4-20 x 3/8" SHCS	3280	2	Double Slide-in Economy
15	3110	4	5/16-18 x 5/8" SHCS	3279	2	Double Slide-in Economy
25	13-6508	4	M6 x 8mm SHCS	25-1962	2	Double Slide-in Economy
40	13-8516	4	M8 x 16mm SHCS	40-1982	2	Double Slide-in Economy

Part Description:

The long – double mount UniBearing™ assembly is commonly used for linear motion applications and is comprised of a long double mount UniBearing™ that is attached to a T-slot profile. There are pre-tapped holes in the profile ends as well as in the housing unit for connecting accessories. Shim kits are included.

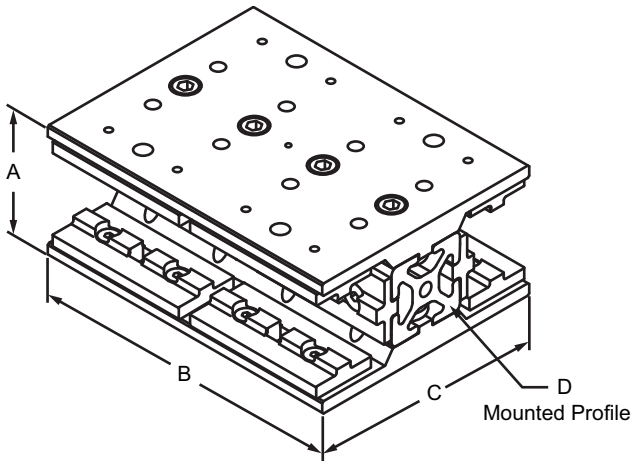

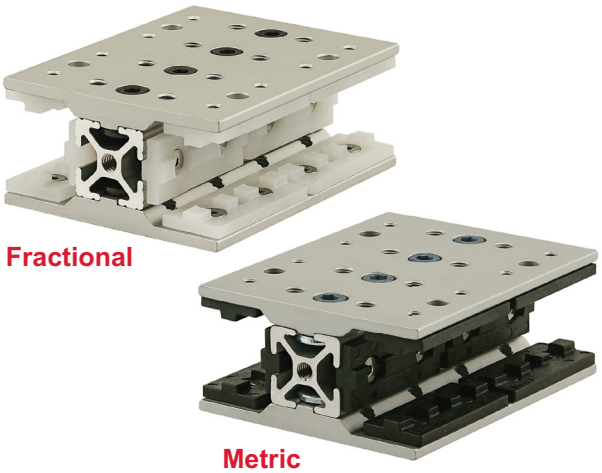

Part No.	Series	Material	Alloy*	Finish	Process	Color	A	B	C	D	Weight
6736	10	Aluminum	6105-T5	Anodize	Extrude	Clear	1.624"	4.000"	3.125"	1010	1.033 lb
6736-Black	10					Black	1.624"	4.000"	3.125"	1010	1.033 lb
6737	10					Clear	2.624"	4.000"	3.125"	1020	1.301 lb
6737-Black	10					Black	2.624"	4.000"	3.125"	1020	1.301 lb
6879	15					Clear	2.510"	6.000"	4.750"	1515	3.608 lb
6879-Black	15					Black	2.510"	6.000"	4.750"	1515	3.608 lb
6883	15					Clear	4.010"	6.000"	4.750"	1530	4.568 lb
6883-Black	15					Black	4.010"	6.000"	4.750"	1530	4.568 lb
6884	15					Clear	5.510"	6.000"	4.750"	1545	5.577 lb
6884-Black	15					Black	5.510"	6.000"	4.750"	1545	5.577 lb
25-6736	25					Clear	40.85mm	100.00mm	79.38mm	25-2525	.4397 kg
25-6736-Black	25					Black	40.85mm	100.00mm	79.38mm	25-2525	.4397 kg
25-6737	25					Clear	65.85mm	100.00mm	79.38mm	25-2550	.5540 kg
25-6737-Black	25					Black	65.85mm	100.00mm	79.38mm	25-2550	.5540 kg
40-6879	40					Clear	65.66mm	160.00mm	124.78mm	40-4040	1.6780 kg
40-6879-Black	40					Black	65.66mm	160.00mm	124.78mm	40-4040	1.6780 kg
40-6883	40					Clear	105.66mm	160.00mm	124.78mm	40-4080	2.0825 kg
40-6883-Black	40					Black	105.66mm	160.00mm	124.78mm	40-4080	2.0825 kg

* Or comparable

Included Hardware (Mount to T-Slot)

Series	Part No.	Qty.	Bolt	Part No.	Qty.	T-Nut
10	3058	8	1/4-20 x 3/8" SHCS	3280	4	Double Slide-in Economy
15	3110	8	5/16-18 x 5/8" SHCS	3279	4	Double Slide-in Economy
25	13-6508	8	M6 x 8mm SHCS	25-1962	4	Double Slide-in Economy
40	13-8516	8	M8 x 16mm SHCS	40-1982	4	Double Slide-in Economy

Linear Bearing Brake Hole Specifications

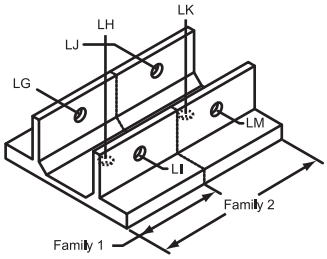

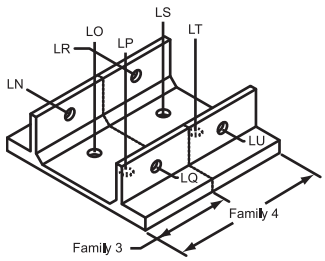

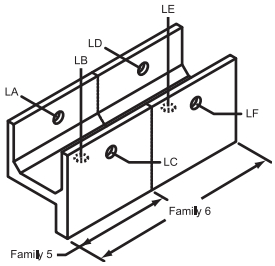

Part No.	Series	Description
7401	10	.265" diameter drill thru one wall
7400	15	.344" diameter drill thru one wall

Part No.	Series	Description
25-7401	25	6.73mm diameter drill thru one wall
40-7400	40	8.73mm diameter drill thru one wall

Series	Standard Bearing Part No.	Brake Ready Bearing Part No.	Series	Standard Bearing Part No.	Brake Ready Bearing Part No.	Bearing Size	Pre-Drilled or Specified Brake Hole Locations
10	6725	—	25	25-6725	—	Family 1	Specify*
15	6825	—	40	40-6825	—		
15	6835	—	40	40-6835	—		
10	—	6425	25	—	25-6425		LG / LH / LI
15	—	6525	40	—	40-6525		
15	—	6535	40	—	40-6535		
—	—	—	45	—	45-6525		
10	6726	—	25	25-6726	—	Family 2	Specify*
15	6826	—	40	40-6826	—		
15	6836	—	40	40-6836	—		
10	—	6426	25	—	25-6426		LG / LH / LI / LJ / LK / LM
15	—	6526	40	—	40-6526		
15	—	6536	40	—	40-6536		
—	—	—	45	—	45-6526		
10	6723	—	25	25-6723	—	Family 3	Specify*
15	6823	—	40	40-6823	—		
15	6833	—	40	40-6833	—		
10	—	6423	25	—	25-6423		LN / LO / LP / LQ
15	—	6523	40	—	40-6523		
15	—	6533	40	—	40-6533		
10	6724	—	25	25-6724	—	Family 4	Specify*
15	6824	—	40	40-6824	—		
15	6834	—	40	40-6834	—		
10	—	6424	25	—	25-6424		LN / LO / LP / LQ / LR / LS / LT / LU
15	—	6524	40	—	40-6524		
15	—	6534	40	—	40-6534		
10	6715	—	25	25-6715	—	Family 5	Specify*
15	6815	—	40	40-6815	—		
15	6830	—	40	40-6830	—		
10	—	6415	25	—	25-6415		LA / LB / LC
15	—	6515	40	—	40-6515		
15	—	6530	40	—	40-6530		
10	6716	—	25	25-6716	—	Family 6	Specify*
15	6816	—	40	40-6816	—		
15	6831	—	40	40-6831	—		
10	—	6416	25	—	25-6416		LA / LB / LC / LD / LE / LF
15	—	6516	40	—	40-6516		
15	—	6531	40	—	40-6531		

* Refer to pages 881-882 for machining services

Engineering Specifications on UHMW-PE Bearing Pads

Property	Test Method	Unit	Typical Value
Specific Gravity	ASTM D-792	g/cm3	0.94
Yield Strength @ 73°F	ASTM D-638	p.s.i.	3400
Ultimate Tensile Strength @ 73°F	ASTM D-638	p.s.i.	6800
Break Elongation @ 73°F	ASTM D-638	%	450
Yield Strength @ 250°F	Stress Strain Diagram	p.s.i.	700
Ultimate Tensile Strength @ 250°F	Stress Strain Diagram	p.s.i.	3300
Break Elongation @ 250°F	Stress Strain Diagram	%	900
Hardness - Rockwell "R" Scale	ASTM D-785	-	64
- Shore "D" Scale	ASTM D-2240	-	67
Flexural Modulus of Elasticity	Bend Creep/1 min. value	p.s.i.	110,000
Shear Strength	ASTM D-732	p.s.i.	3500
Izod Impact @ + 23°C	ASTM D-256A	ft-lbs/in. notch	No break
@ - 140° C	ASTM D-256A	ft-lbs/in. notch	No break
Environmental Stress Cracking @ F50	ASTM D-1693 Mod	hrs.	6000
Water Absorption	ASTM D-570	-	NIL

Abrasive Resistance - Sand Slurry Test

- **Each material listed below was rotated 24 hours @ 1750 r.p.m.**
- **Carbon Steel = abrasive rating of 100.**
- **The weight loss for each material is relative to 100.**
- **The lower the figure, the better the abrasive resistance.**
- **50-50 sand/water slurry.**

Material	Rating
UHMW-PE	15
Nylon	31
High MW polyethylene	44
TFE	72
Stainless steel	84
Polypropylene	87
Polycarbonate	96
Hi carbon steel	100
Polyacetal	110
TFE/glass fiber	113
Normal MW polyethylene	125
Phosphor bronze	193
Yellow brass	409
Phenolic laminate	571
Hickory wood	967

Coefficient of Friction

UHMW-PE polymer has a lower coefficient of friction than glass. Its self-lubricating characteristics make it an ideal material for bearings, bushings, valves, wear strips, or any application where sliding contact is encountered.

Materials	Static	Kinetic	Test Method
Aluminum* vs. UHMW-PE	0.12	0.016	ASTM D-1894
Mild Steel vs. Mild Steel	0.30 - 0.40	0.25 - 0.35	
Mild Steel vs. UHMW-PE	0.15 - 0.20	0.12 - 0.20	
UHMW-PE vs. UHMW-PE	0.20 - 0.30	0.20 - 0.30	

*Anodized 204 R1 Spec on extruded aluminum

Comparison of Dynamic Coefficient of Friction on Polished Steel

Property	UHMW-PE
Dry	0.10 - 0.22
Water	0.05 - 0.10
Oil	0.05 - 0.08

FDA and USDA Approved

Load Bearing Properties of UHMW-PE

Torsional Rigidity As A Function Of Temperature

(Measured On Compression - Molded Sheets)

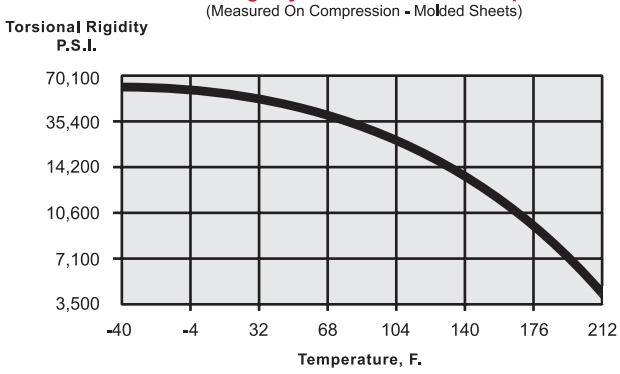

Tensile Strength At The Yield Point As A Function Of Temperature

(Measured At The Feed Rate Of 3.9 in. / min.)

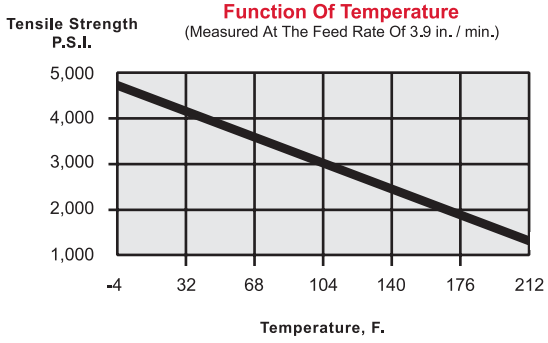

Stress - Strain At Various Temperatures

(Measured At The Feed Rate Of 1 in. / min.)

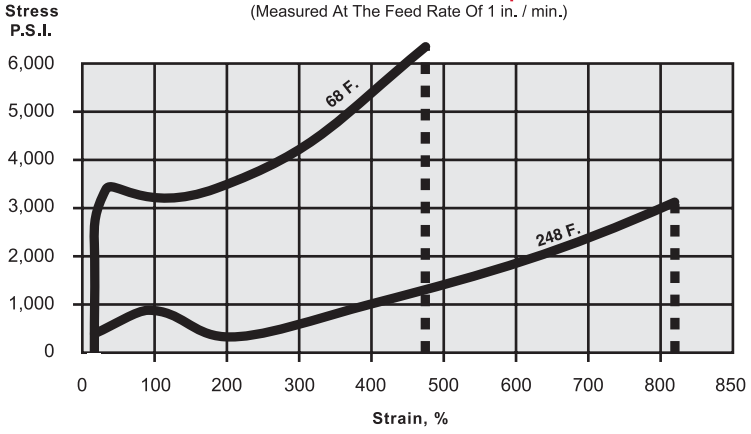

Flexural Modulus Of Elasticity As A Function Of Load Time

(Measured By The Bending Creep Test With A Constant Bending Stress Of 425 P.S.I.)

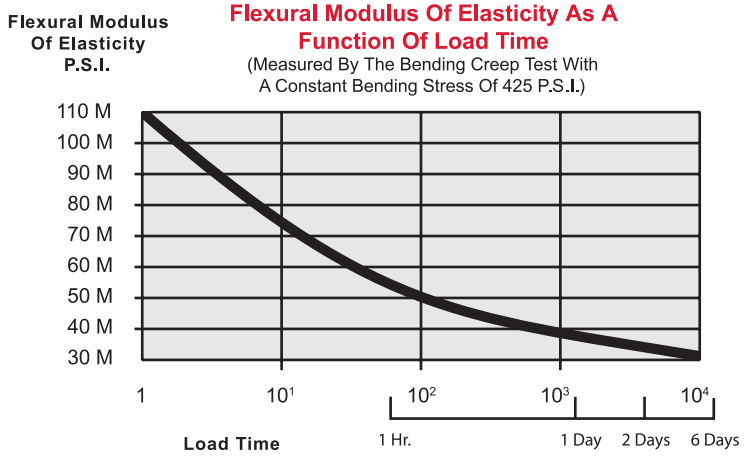

Chemical Resistance of UHMW-PE

TEST SPECIMENS	Dumb-bell type
DURATION OF TEST	30 Days
+ = RESISTANT	Mechanical properties not appreciably affected
/ = LIMITED RESISTANT	Decreases in yield stress and ultimate tensile strength less than 20%
- = NOT RESISTANT	Decreases in yield stress and ultimate tensile strength greater than 20%

Reagent	Temperatures		
	20°C	50°C	80°C
I. Inorganic acids			
Chromic acid (80%)	+	+	/
Hydrychloric acid (conc.)	+	+	+
Hydrocyanic acid	+	+	
Hydrofluoric acid	-	-	-
Nitric acid (conc.)	/	-	
Nitric acid (50%)	+	+	/
Nitric acid (20%)	+	+	+
Phosphoric acid (85%)	+	-	-
Sulphuric acid (conc.)	+	-	-
Sulphuric acid (50%)	+	+	+
II. Alkalis			
Aqueous ammonia	+	+	
Potassium hydroxide solution	+	+	+
Sodium hydroxide solution	+	+	+
III. Aqueous solutions of inorganic salts			
Aluminum chloride	+	+	+
Ammonium nitrate	+	+	+
Bleaching powder	+	+	+
Calcium chloride	+	+	+
Sodium carbonate	+	+	+
Sodium chloride	+	+	+
Sodium hypochlorite	+	+	+
Zinc chloride	+	+	+
IV. Organic acids			
Acetic acid (99%)	+	+	/
Acetic acid (10%)	+	+	+
Butyric acid	+	+	
Citric acid	+	+	+
Formic acid	+	+	
Oleic acid	+	+	/

Reagent	Temperatures		
	20°C	50°C	80°C
V. Hydrocarbons and halogenated hydrocarbons			
Benzene	/	/	
Carbon tetrachloride	/		
Cyclohexane	+	+	
Dichloroethylene	-	-	
Diesel oil	+	+	/
n-Heptane	+	+	
Petroleum ether	+		
Trichloroethylene	/	-	
Toluene	/	-	
White spirit	+	/	
Xylene	/	/	-
VI. Alcohols, Ketones, Ester, and Amines			
Acetone	+	+	
Aniline	+	+	/
Benzyl alcohol	+	+	+
Butyl alcohol	+	+	+
Cyclohexanol	+	+	+
Ethanol	+	+	
Ethyl acetate	+	+	
Ethylene glycol	+	+	+
Glycerine	+	+	+
Lauryl alcohol	+	+	+
Propyl alcohol	+	+	+
VII. Miscellaneous			
Beer	+	+	+
Detergents in aqueous solution	+	+	+
Distilled water	+	+	+
Hydrogen peroxide 30% (perhydrol)	+	+	
Linseed oil	+	+	+
Milk	+	+	+
Olive oil	+	+	+
Sea water	+	+	+
Wine	+	+	+

Because we cannot anticipate or control the many different conditions under which our products may be used, the product information contained in this catalog should be viewed as general guidelines only and not as a recommendation to use our products in any particular situation. Although we believe that all information contained herein is reliable, certain information in this catalog may have been obtained from test results published by other parties, and consequently, we cannot guarantee the accuracy of all information contained in this catalog. In addition, particular conditions of use and reasonable lot-to-lot variations can affect performance. Users of our products should perform their own tests to determine the suitability of any product for their particular purposes.

Single-Keyed Standard Linear Bearing Pad

Part Description:

The single-keyed standard linear bearing pad is commonly used with bearings to create linear motion and is made of self-lubricating UHMW. It has a low coefficient of friction and is designed with rounded corners on the molded pad, allowing simple installation and replacement. This pad is available in black or white and has a single key; it comes with holes for mounting hardware and brake kits.

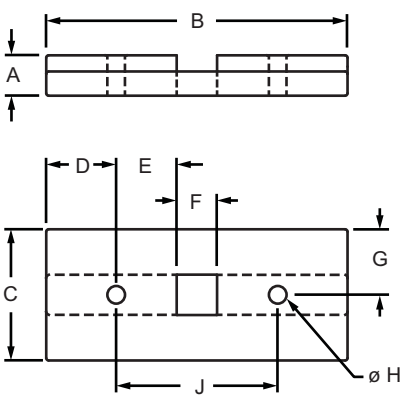

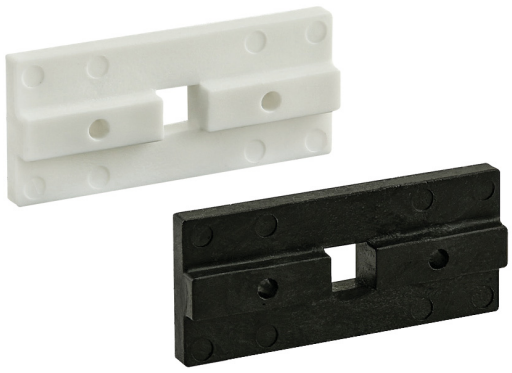

Part No.	Series	A	B	C	D	E	F	G	H	J	K	L	M	Weight
6490	10	.250"	1.865"	.812"	.433"	.375"	.250"	.406"	.109"	1.000"	.150"	.283"	.246"	.008 lb
6491	10	.250"	1.865"	.812"	.433"	.375"	.250"	.406"	.109"	1.000"	.150"	.283"	.246"	.008 lb
6590	15	.375"	2.770"	1.250"	.635"	.594"	.312"	.625"	.125"	1.500"	.243"	.469"	.312"	.029 lb
6591	15	.375"	2.770"	1.250"	.635"	.594"	.312"	.625"	.125"	1.500"	.243"	.469"	.312"	.029 lb
25-6490	25	6.35mm	46.69mm	20.62mm	10.84mm	9.33mm	6.35mm	10.31mm	2.77mm	25.00mm	3.81mm	7.19mm	6.25mm	.0036 kg
25-6491	25	6.35mm	46.69mm	20.62mm	10.84mm	9.33mm	6.35mm	10.31mm	2.77mm	25.00mm	3.81mm	7.19mm	6.25mm	.0035 kg
40-6590	40	9.53mm	74.12mm	31.75mm	17.06mm	16.04mm	7.92mm	15.88mm	3.18mm	40.00mm	6.17mm	11.91mm	7.92mm	.0140 kg
40-6591	40	9.53mm	74.12mm	31.75mm	17.06mm	16.04mm	7.92mm	15.88mm	3.18mm	40.00mm	6.17mm	11.91mm	7.92mm	.0145 kg

Material Specifications

Part No.	Material	Process	Finish	Color
6490	UHMW PE	Injection Mold	Smooth	White
6491				Black
6590				White
6591				Black
25-6490				White
25-6491				Black
40-6590		Extruded		Natural
40-6591				Black

Suggested Hardware (Mount Pad to Bearing Housing)

Part No.	Series	Qty.	Bolt
3625	10	2	#8 x 3/8" Bearing Pad Screw
3628	15	2	#10 x 5/8" Bearing Pad Screw
25-3625	25	2	#8 x 3/8" Bearing Pad Screw
40-3628	40	2	#10 x 5/8" Bearing Pad Screw

Part Description:

The single-keyed high-cycle linear bearing pad is a higher strength pad ideal for quick acceleration and deceleration linear motion applications. It is made of self-lubricating UHMW and has a low coefficient of friction. The design includes rounded corners on the molded pad, allowing simple installation and replacement. This pad is available in black or white and has a single key and mounts to the housing using steel flathead socket cap screws that have Loctite®. It comes with holes for mounting hardware or brake kits and includes nutserts.

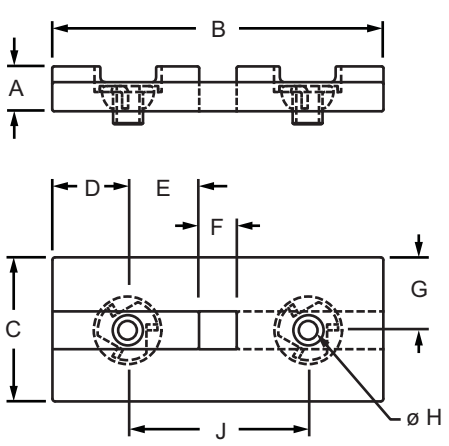

Part No.	Series	A	B	C	D	E	F	G	H	J	K	L	M	N	Weight
6595	15	.375"	2.770"	1.250"	.635"	.594"	.312"	.625"	10-32	1.500"	.243"	.469"	.312"	.484"	.033 lb
6596	15	.375"	2.770"	1.250"	.635"	.594"	.312"	.625"	10-32	1.500"	.243"	.469"	.312"	.484"	.032 lb
40-6595	40	9.53mm	74.12mm	31.75mm	17.06mm	16.04mm	7.92mm	15.88mm	10-32	40.00mm	6.17mm	11.91mm	7.92mm	12.29mm	.0159 kg
40-6596	40	9.53mm	74.12mm	31.75mm	17.06mm	16.04mm	7.92mm	15.88mm	10-32	40.00mm	6.17mm	11.91mm	7.92mm	12.29mm	.0158 kg
45-6598	45	10.77mm	78.00mm	39.00mm	16.50mm	17.50mm	10.00mm	19.50mm	10-32	45.00mm	6.17mm	14.63mm	9.75mm	12.29mm	.0168 kg

Material Specifications

Part No.	Material	Process	Finish	Color
6595	UHMW PE	Injection Mold	Smooth	White
6596				Black
40-6595		Extruded		Natural
40-6596				Black
45-6598		Injection Mold		Black

Suggested Hardware (Mount Pad to Bearing Housing)

Part No.	Series	Qty.	Bolt
3022	15 40 45	2	10-32 x 1/2" FHSCS

T-Slot Insert Linear Bearing Pad

Part Description:

The T-slot insert linear bearing pad is commonly used with bearings to create linear motion and is made of self-lubricating white UHMW. It has a low coefficient of friction and is designed with rounded corners on the molded pad, allowing simple installation and replacement. This pad is designed to slide into, and stabilize within, the T-slot. It comes with holes for mounting hardware and brake kits.

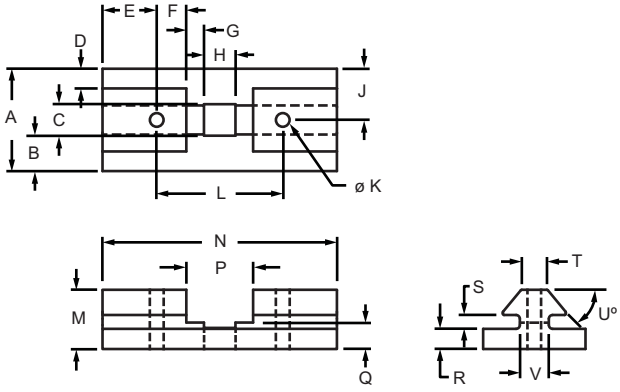

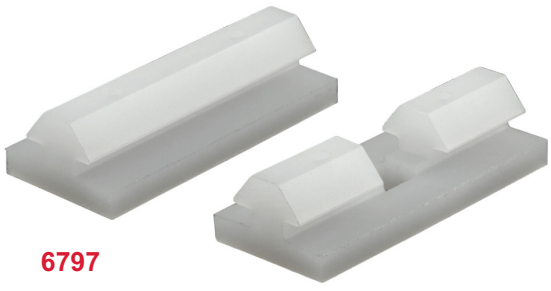

6797

6798

Part No.	Series	Color	A	B	C	D	E	F	G	H	J	K
6797	10	Natural	.812"	—	—	.156"	.430"	—	—	—	.406"	.109"
6798	10		.812"	.281"	.250"	.156"	.430"	.235"	.140"	.250"	.406"	.109"
6897	15		1.250"	—	—	.365"	.656"	—	—	—	.625"	.125"
6898	15		1.250"	.469"	.312"	.365"	.656"	.369"	.219"	.312"	.625"	.125"
25-6797	25		20.62mm	—	—	6.35mm	10.85mm	—	—	—	10.31mm	2.77mm
25-6798	25		20.62mm	7.14mm	6.35mm	6.35mm	10.85mm	5.77mm	3.56mm	6.35mm	10.31mm	2.77mm
40-6897	40		31.75mm	—	—	9.27mm	17.30mm	—	—	—	15.88mm	3.18mm
40-6898	40		31.75mm	11.91mm	7.92mm	9.27mm	17.30mm	10.49mm	5.55mm	7.92mm	15.88mm	3.18mm

Part No.	Series	L	M	N	P	Q	R	S	T	U	V	Weight
6797	10	1.000"	.470"	1.860"	—	.210"	.160"	.110"	.200"	50°	.230"	.013 lb
6798	10	1.000"	.470"	1.860"	.530"	.210"	.160"	.110"	.200"	50°	.230"	.012 lb
6897	15	1.500"	.700"	2.800"	—	.360"	.240"	.195"	.300"	45°	.300"	.046 lb
6898	15	1.500"	.700"	2.800"	.750"	.360"	.240"	.195"	.300"	45°	.300"	.040 lb
25-6797	25	25.00mm	11.94mm	46.69mm	—	5.33mm	4.06mm	2.79mm	5.08mm	50°	5.84mm	.0058 kg
25-6798	25	25.00mm	11.94mm	46.69mm	13.46mm	5.33mm	4.06mm	2.79mm	5.08mm	50°	5.84mm	.0063 kg
40-6897	40	40.00mm	17.78mm	75.00mm	—	9.14mm	6.10mm	4.95mm	7.62mm	45°	7.62mm	.0222 kg
40-6898	40	40.00mm	17.78mm	75.00mm	19.05mm	9.14mm	6.10mm	4.95mm	7.62mm	45°	7.62mm	.0195 kg

Material Specifications

Material	Process	Finish
UHMW PE	Extruded	Smooth

Suggested Hardware (Mount Pad to Bearing Housing)

Part No.	Series	Qty.	Bolt
3625	10	2	#8 x 3/8" Bearing Pad Screw
3628	15	2	#10 x 5/8" Bearing Pad Screw
25-3625	25	2	#8 x 3/8" Bearing Pad Screw
40-3628	40	2	#10 x 5/8" Bearing Pad Screw

Part Description:

The single-keyed UniBearing™ pad is commonly used with a UniBearing™ to create custom bearings. It has a single key and mounts to the profile using stainless steel flathead socket cap screws that have Loctite®. It provides a flat bearing and quick change-out as well as being designed with rounded corners on the molded pad for easy installation. The pad includes holes for mounting the hardware or brake kits as well as all mounting hardware.

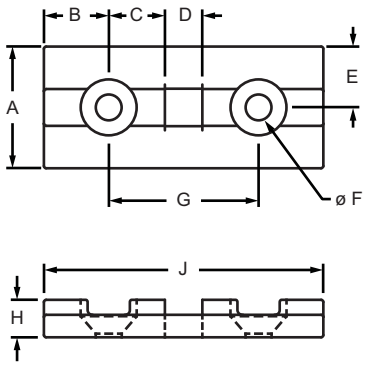

Part No.	Series	Color	A	B	C	D	E	F	G	H	J	K	L	M	Weight
6705	10	White	.812"	.433"	.375"	.246"	.406"	.172"	1.000"	.250"	1.865"	.150"	.283"	.246"	.012 lb
6706	10	Black	.812"	.433"	.375"	.246"	.406"	.172"	1.000"	.250"	1.865"	.150"	.283"	.246"	.012 lb
6814	15	White	1.250"	.635"	.594"	.312"	.625"	.193"	1.500"	.375"	2.770"	.243"	.469"	.312"	.035 lb
6817	15	Black	1.250"	.635"	.594"	.312"	.625"	.193"	1.500"	.375"	2.770"	.243"	.469"	.312"	.035 lb
25-6705	25	White	20.62mm	10.84mm	9.33mm	6.25mm	10.31mm	4.37mm	25.00mm	6.35mm	46.69mm	3.81mm	7.19mm	6.25mm	.0054 kg
25-6706	25	Black	20.62mm	10.84mm	9.33mm	6.25mm	10.31mm	4.37mm	25.00mm	6.35mm	46.69mm	3.81mm	7.19mm	6.25mm	.0054 kg
40-6814	40	Natural	31.75mm	17.06mm	16.04mm	7.92mm	15.88mm	4.90mm	40.00mm	9.53mm	74.12mm	6.17mm	11.91mm	7.92mm	.0172 kg
40-6817	40	Black	31.75mm	17.06mm	16.04mm	7.92mm	15.88mm	4.90mm	40.00mm	9.53mm	74.12mm	6.17mm	11.91mm	7.92mm	.0172 kg

Material Specifications

Part No.	Material	Process	Finish
6705	UHMW PE	Injection Mold	Smooth
6706			
6814			
6817			
25-6705			
25-6706			
40-6814		Extruded	
40-6817			

Included Hardware (Mount Pad to Bearing Housing)

Part No.	Series	Qty.	Bolt
3649*	10 25	2	SS 8-32 x 1/4" FHSCS
3650*	15 40	2	SS 10-24 x 3/8" FHSCS

*Stainless steel (SS) hardware included.

Double-Keyed UniBearing™ Pad

Part Description:

The double-keyed UniBearing™ pad is commonly used with a UniBearing™ to create custom bearings. It has a double key and mounts to a profile using stainless steel flathead socket cap screws. It provides a flat bearing and quick change-out as well as being designed with rounded corners on the molded pad for easy installation.

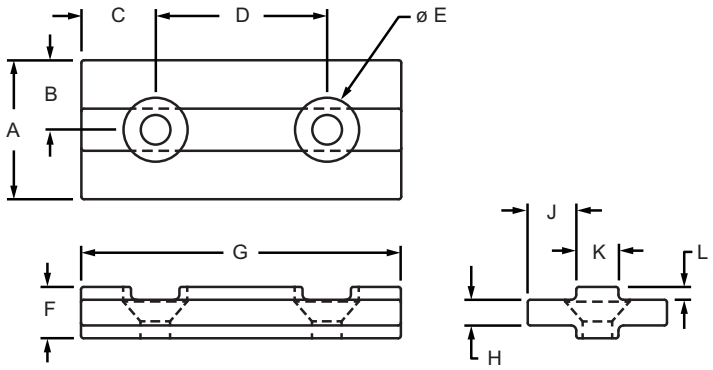

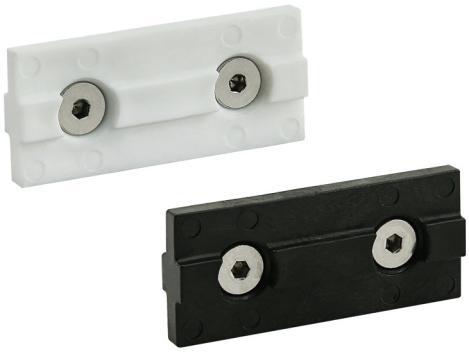

Part No.	Series	Color	A	B	C	D	E	F	G	H	J	K	L	Weight
6792	10	White	.812"	.406"	.433"	1.000"	.172"	.300"	1.865"	.150"	.283"	.246"	.075"	.028 lb
6793	10	Black	.812"	.406"	.433"	1.000"	.172"	.300"	1.865"	.150"	.283"	.246"	.075"	.029 lb
6892	15	White	1.250"	.625"	.635"	1.500"	.258"	.513"	2.770"	.243"	.469"	.312"	.135"	.112 lb
6893	15	Black	1.250"	.625"	.635"	1.500"	.258"	.513"	2.770"	.243"	.469"	.312"	.135"	.112 lb
25-6792	25	White	20.62mm	10.31mm	10.98mm	25.40mm	4.37mm	7.62mm	47.37mm	3.81mm	7.19mm	6.25mm	1.91mm	.0127 kg
25-6793	25	Black	20.62mm	10.31mm	10.98mm	25.40mm	4.37mm	7.62mm	47.37mm	3.81mm	7.19mm	6.25mm	1.91mm	.0127 kg
40-6892	40	Natural	31.75mm	15.88mm	17.06mm	40.00mm	6.55mm	13.03mm	74.12mm	6.17mm	11.91mm	7.92mm	3.43mm	.0326 kg
40-6893	40	Black	31.75mm	15.88mm	17.06mm	40.00mm	6.55mm	13.03mm	74.12mm	6.17mm	11.91mm	7.92mm	3.43mm	.0317 kg

Material Specifications

Part No.	Material	Process	Finish
6792	UHMW PE	Injection Mold	Smooth
6793			
6892			
6893			
25-6792			
25-6793			
40-6892		Extruded	
40-6893			

Included Hardware (Mount Pad to Profile)

Series	Qty.	Bolt	Qty.	T-Nut
10 25	2	673003*	1	3281
15	2	206701*	1	3263
40	2	206701*	1	3686*

*Stainless steel (SS) hardware included.

Single-Keyed Standard Bearing Pad Profile

Part Description:

The single-keyed standard bearing pad profile can be cut to your desired length. It has a key on one side of the pad and is commonly used to create custom bearings for linear motion applications. It is made of easily machined, self-lubricating UHMW, and has a low coefficient of friction. This pad profile is available in black or natural. See page 860 for the cut-to-length machining service.

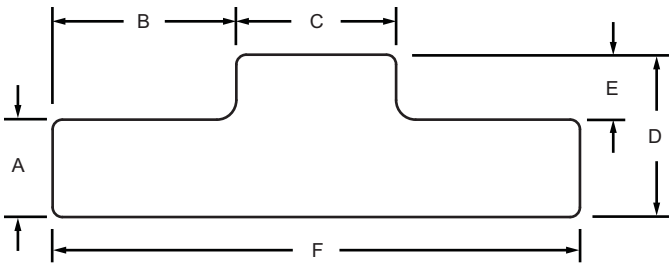

Part No.	Series	Color	A	B	C	D	E	F	Stock Length	Weight
6700	10	Natural	.150"	.283"	.246"	.250"	.100"	.812"	145"	.004 lb / ft
6701	10	Black	.150"	.283"	.246"	.250"	.100"	.812"	145"	.004 lb / ft
6810	15	Natural	.243"	.469"	.312"	.375"	.132"	1.250"	145"	.011 lb / ft
6811	15	Black	.243"	.469"	.312"	.375"	.132"	1.250"	145"	.011 lb / ft
25-6700	25	Natural	3.81mm	7.19mm	6.25mm	6.35mm	2.54mm	20.62mm	3.683 M	.0021 kg / m
25-6701	25	Black	3.81mm	7.19mm	6.25mm	6.35mm	2.54mm	20.62mm	3.683 M	.0021 kg / m
40-6810	40	Natural	6.17mm	11.91mm	7.92mm	9.53mm	3.35mm	31.75mm	3.683 M	.0051 kg / m
40-6811	40	Black	6.17mm	11.91mm	7.92mm	9.53mm	3.35mm	31.75mm	3.683 M	.0051 kg / m

Material Specifications

Material	Process	Finish
UHMW PE	Extruded	Smooth

Required Machining Services

Machining Type	Machined	Reference Page
Cut to Length	Bearing Pad Profile	860

Double-Keyed Standard Bearing Pad Profile

Part Description:

The double-keyed standard bearing pad profile can be cut to your desired length. It has a key on both sides of the pad and is commonly used to create custom bearings for linear motion applications. It is made of easily machined, self-lubricating UHMW, and has a low coefficient of friction. This pad profile is available in black or natural. See page 860 for the cut-to-length machining service.

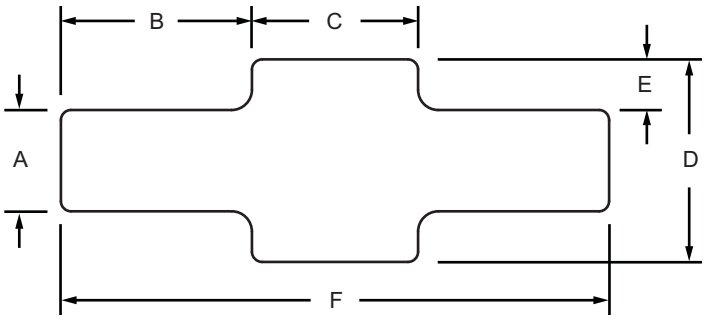

Part No.	Series	Color	A	B	C	D	E	F	Stock Length	Weight
6702	10	Natural	.150"	.283"	.246"	.300"	.075"	.812"	145"	.053 lb / ft
6703	10	Black	.150"	.283"	.246"	.300"	.075"	.812"	145"	.053 lb / ft
6812	15	Natural	.243"	.469"	.312"	.493"	.125"	1.250"	145"	.125 lb / ft
6813	15	Black	.243"	.469"	.312"	.493"	.125"	1.250"	145"	.125 lb / ft
25-6702	25	Natural	3.81mm	7.19mm	6.25mm	7.62mm	1.91mm	20.62mm	3.683 M	.0024 kg / m
25-6703	25	Black	3.81mm	7.19mm	6.25mm	7.62mm	1.91mm	20.62mm	3.683 M	.0024 kg / m
40-6812	40	Natural	6.17mm	11.91mm	7.92mm	12.52mm	3.18mm	31.75mm	3.683 M	.0056 kg / m
40-6813	40	Black	6.17mm	11.91mm	7.92mm	12.52mm	3.18mm	31.75mm	3.683 M	.0056 kg / m

Material Specifications

Material	Process	Finish
UHMW PE	Extruded	Smooth

Required Machining Services

Machining Type	Machined	Reference Page
Cut to Length	Bearing Pad Profile	860

Part Description:

Linear bearing shim stock is used to create a precise fit. Each shim has a slotted design that enables easy installation without having to dismantle the bearing; simply loosen the bearing pad and slide the shim(s) between the pad and housing while the bearing is still in place. Shims are sold in packs of 10 and are compatible with all 80/20 bearings. See page 660 for more information on shims.

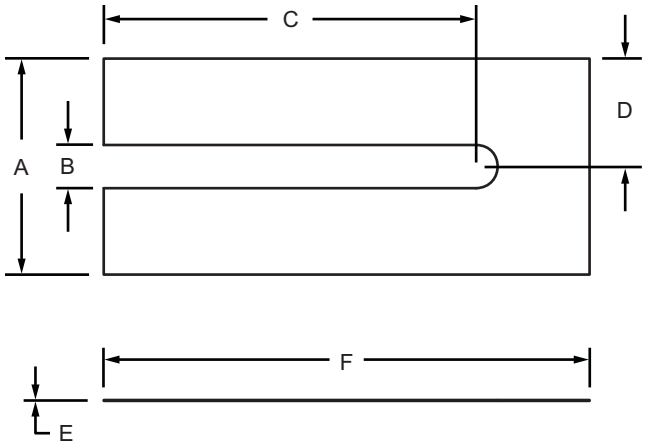

Part No.	Series	Material	Process	Color	A	B	C	D	E	F	Weight
6780	10	Mylar	Cut	Clear	.812"	.175"	1.500"	.406"	.005"	1.875"	.004 lb
6881	15				1.250"	.250"	2.156"	.625"	.005"	2.812"	.011 lb
25-6780	25				20.62mm	4.44mm	38.10mm	10.31mm	.13mm	47.63mm	.0020 kg
40-6881	40				31.75mm	6.35mm	54.76mm	15.88mm	.13mm	71.42mm	.0051kg
45-6880	45				36.00mm	8.00mm	66.50mm	18.00mm	.08mm	80.00mm	.0036kg

"L" Handle Linear Bearing Brake Kit

Part Description:

The "L" handle linear bearing brake kit adds an adjustable stop to any brake-ready bearing by securing it into a semi-permanent position. It also adds a grip to aid with adjustments and provides secure lockdown capability for safety. It's available in black, gray, blue, red, or safety yellow to match your application. All mounting hardware is included.

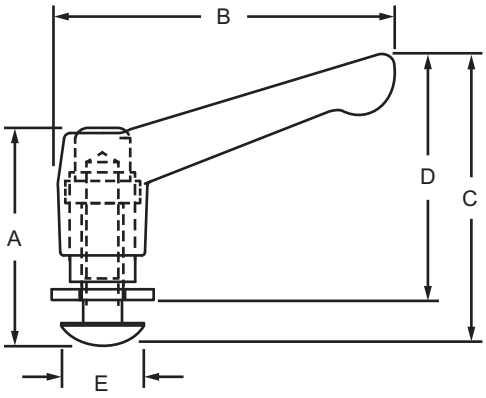

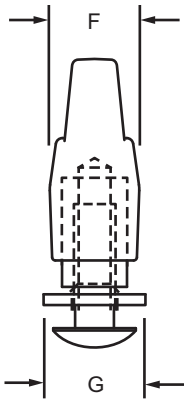

Part No.	Series	Material	Process	Finish	Color	A	B	C	D	E	F	G	Weight
6850	10	Nylon 66	Injection Mold	Matte	Black	1.325"	2.041"	1.745"	1.445"	.500"	.540"	.617"	.048 lb
6800	15	Zinc	Die Cast	Gloss	Gray	2.234"	3.505"	2.985"	2.235"	.703"	.871"	.688"	.336 lb
6805	15	Zinc	Die Cast	Gloss	Blue	2.234"	3.505"	2.985"	2.235"	.703"	.871"	.688"	.336 lb
6806	15	Zinc	Die Cast	Gloss	Red	2.234"	3.505"	2.985"	2.235"	.703"	.871"	.688"	.336 lb
6807	15	Zinc	Die Cast	Gloss	Yellow	2.234"	3.505"	2.985"	2.235"	.703"	.871"	.688"	.336 lb
25-6850	25	Nylon 66	Injection Mold	Matte	Black	33.66mm	51.84mm	44.32mm	36.70mm	12.70mm	13.72mm	15.67mm	.0277 kg
40-6800	40	Zinc	Die Cast	Gloss	Gray	56.74mm	89.03mm	75.82mm	56.77mm	17.86mm	22.12mm	17.48mm	.1524 kg
40-6805	40	Zinc	Die Cast	Gloss	Blue	56.74mm	89.03mm	75.82mm	56.77mm	17.86mm	22.12mm	17.48mm	.1524 kg
40-6806	40	Zinc	Die Cast	Gloss	Red	56.74mm	89.03mm	75.82mm	56.77mm	17.86mm	22.12mm	17.48mm	.1524 kg
40-6807	40	Zinc	Die Cast	Gloss	Yellow	56.74mm	89.03mm	75.82mm	56.77mm	17.86mm	22.12mm	17.48mm	.1524 kg
45-6800*	45	Zinc	Die Cast	Gloss	Gray	56.74mm	89.03mm	75.82mm	56.77mm	19.40mm	22.12mm	19.00mm	.1524 kg

*Includes drop-in t-nut Part No. 13173

Part Description:

The "T" handle linear bearing brake kit adds an adjustable stop to any brake-ready bearing by securing it into a semi-permanent position. It also adds a grip to aid with adjustments and provides secure lockdown capability for safety. All mounting hardware is included.

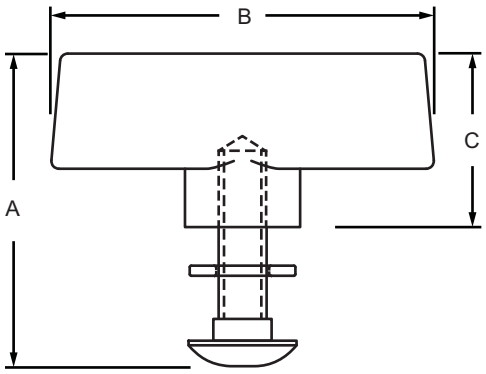

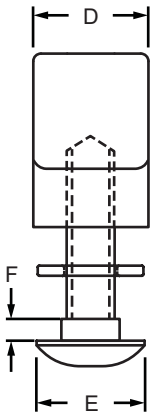

Part No.	Series	Material	Finish	Color	A	B	C	D	E	F	Weight
6801	15	Steel / Polyproylene	Zinc / Matte	Black	2.036"	2.491"	1.130"	.750"	.703"	.150"	.086 lb
40-6801	40				51.71mm	63.27mm	28.70mm	19.05mm	17.86mm	3.81mm	.0390 kg

Hex Nut Linear Bearing Brake Kit

Part Description:

The hex nut linear bearing brake kit adds an adjustable stop to any brake-ready bearing by securing it into a semi-permanent position. It provides secure lockdown capability for safety and is compact, taking up little space. All mounting hardware is included.

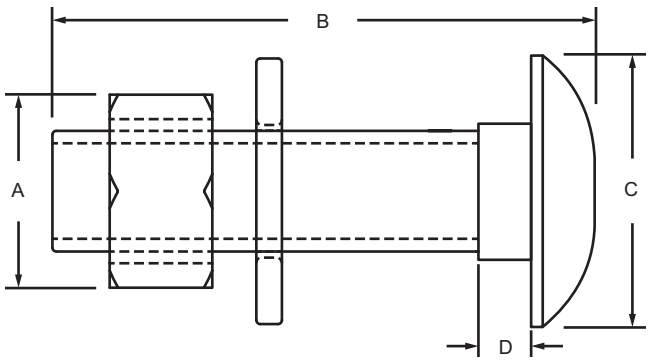

Part No.	Series	Material	Grade	Process	Finish	Color	A	B	C	D	Weight
6851	10	Steel	Grade 5	Formed	Zinc	Black	.438"	.865"	.500"	.150"	.023 lb
6803	15						.500"	1.406"	.703"	.150"	.048 lb
25-6851	25						11.11mm	21.97mm	12.70mm	3.81mm	.0104 kg
40-6803	40						12.70mm	35.71mm	17.86mm	3.81mm	.0217 kg

Part Description:

The wing nut linear bearing brake kit is bright zinc and adds an adjustable stop to any brake-ready bearing by securing it into a semi-permanent position. It provides secure lockdown capability for safety and is compact, taking up little space. All mounting hardware is included.

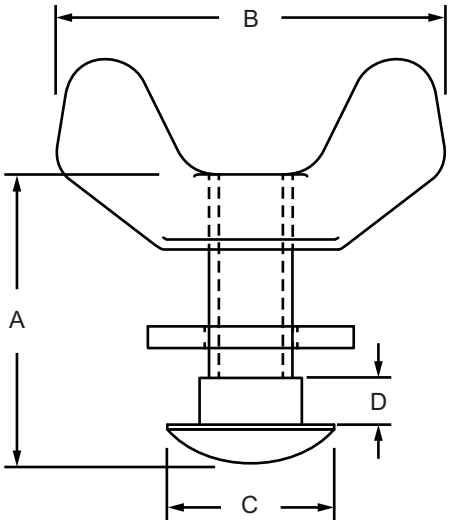

Part No.	Series	Material	Process	Finish	Color	A	B	C	D	Weight
6852	10	Steel	Cold Forged	Zinc	Bright / Black	.865"	1.158"	.500"	.150"	.028 lb
6804	15					1.416"	1.375"	.703"	.150"	.054 lb
25-6852	25					21.97mm	29.41mm	12.70mm	3.81mm	.0127 kg
40-6804	40					35.97mm	34.93mm	17.86mm	3.81mm	.0244 kg

Star Handle Linear Bearing Brake Kit

Part Description:

The star handle linear bearing brake kit adds an adjustable stop to any brake-ready bearing by securing it into a semi-permanent position. It also adds a grip to aid with adjustments and provides secure lockdown capability for safety. All mounting hardware is included.

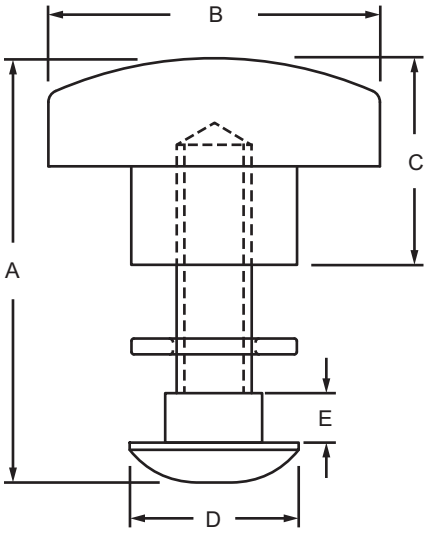

Part No.	Series	Material	Finish	Color	A	B	C	D	E	Weight
6802	15	Steel / Polypropylene	Zinc / Texture	Black	1.766"	1.380"	.860"	.703"	.150"	.069 lb
40-6802	40				44.86mm	35.05mm	21.84mm	17.86mm	3.81mm	.0312 kg

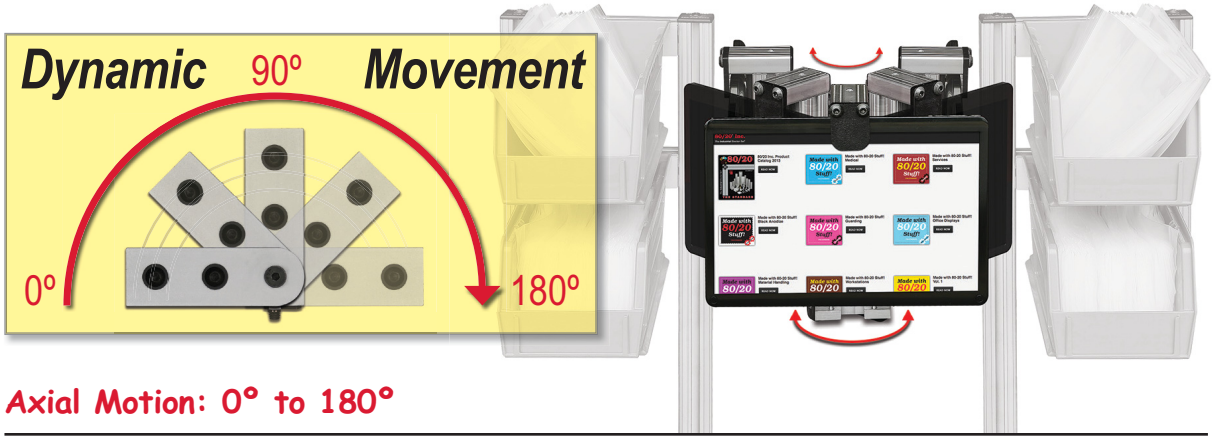

Axial Motion: 0° to 180°

Dynamic pivots are typically used to create axial motion ranging from 0-180 degrees. There are also assemblies available to limit the range of motion from 0-90 degrees. You'll commonly find dynamic pivots in tooling arms, displays and computer stands.

All dynamic arms and brackets come with permanently lubricated bronze bushings for long-lasting and repeated movement.

Dynamic Pivot Components

Dynamic pivot assemblies include a pivot nub and connect to the profile using either "L" arms, straight arms, or brackets. These arms have permanently lubricated bronze bushings that act as a high-strength pivot point and reduce maintenance time and cost.

Repositioning Your Pivot

If you will be repositioning your dynamic pivot frequently, consider adding a handle to help simplify and speed up the process. Dynamic pivots are long-lasting and there are a variety of assembly combinations available that allow you to fold or rotate the profiles to fit your specific needs.

0 Degree Dynamic Pivot Nub

Part Description:

The 0 degree dynamic pivot nub is commonly used as a connection hub for dynamic pivots to create full axial motion ranging from 0-180 degrees parallel to the mounting profile. The 0 degree dynamic pivot nub requires no machining services and can be easily assembled, lending itself to repositioning and reuse. The hardware to mount the nub to a profile is included while the suggested mounting hardware to attach the arm to the nub can be found below.

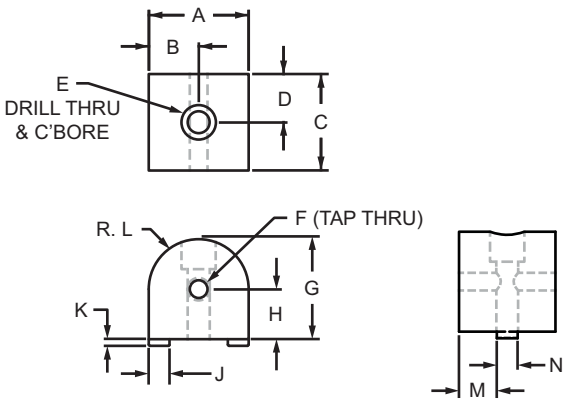

Part No.	Series	Color	A	B	C	D	E	F	G	H	J	K	L	M	N	Weight
4181	10	Clear	1.000"	.500"	.950"	.475"	1/4-20	1/4-20	1.000"	.500"	.245"	.060"	.500"	.353"	.245"	.096 lb
4181-Black	10	Black	1.000"	.500"	.950"	.475"	1/4-20	1/4-20	1.000"	.500"	.245"	.060"	.500"	.353"	.245"	.096 lb
4381	15	Clear	1.500"	.750"	1.448"	.724"	5/16-18	5/16-18	1.500"	.750"	.312"	.100"	.750"	.568"	.312"	.312 lb
4381-Black	15	Black	1.500"	.750"	1.448"	.724"	5/16-18	5/16-18	1.500"	.750"	.312"	.100"	.750"	.568"	.312"	.312 lb
25-4181	25	Clear	25.00mm	12.50mm	23.72mm	11.86mm	M6 x 1.0	M6 x 1.0	25.00mm	12.50mm	6.30mm	1.09mm	12.50mm	8.71mm	6.30mm	.0428 kg
25-4181-Black	25	Black	25.00mm	12.50mm	23.72mm	11.86mm	M6 x 1.0	M6 x 1.0	25.00mm	12.50mm	6.30mm	1.09mm	12.50mm	8.71mm	6.30mm	.0428 kg
40-4381	40	Clear	40.00mm	20.00mm	38.71mm	19.36mm	M8 x 1.25	M8 x 1.25	40.00mm	20.00mm	7.92mm	2.50mm	20.00mm	11.44mm	7.92mm	.1655 kg
40-4381-Black	40	Black	40.00mm	20.00mm	38.71mm	19.36mm	M8 x 1.25	M8 x 1.25	40.00mm	20.00mm	7.92mm	2.50mm	20.00mm	11.44mm	7.92mm	.1655 kg

Material Specifications

Material	Alloy*	Finish
Aluminum	6105-T5	Anodize

* Or comparable

Included Hardware (Mount Nub to T-Slot)

Part No.	Series	Qty.	Bolt	T-Nut
3306	10	1	1/4-20 x 1" SHCS	Economy
3613	15	1	5/16-18 x 1.5" SHCS	
75-3415	25	1	M6 x 25mm SHCS	
75-3479	40	1	M8 x 40mm SHCS	

Suggested Hardware (Mount Arm to Nub)

Part No.	Series	Qty.	Bolt Assembly
3501	10	1	5/16 x 1/4" Shoulder Bolt & Thrust Washer
3500	15	1	3/8 x 3/8" Shoulder Bolt & Thrust Washer
25-3501	25	1	6mm x 6mm Shoulder Bolt & Thrust Washer
40-3500	40	1	10mm x 10mm Shoulder Bolt & Thrust Washer

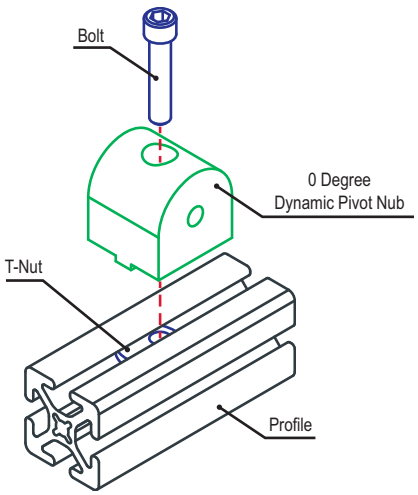

Part Description:

The 90 degree dynamic pivot nub is commonly used as a connection hub for dynamic pivots to create full axial motion ranging from 0-180 degrees perpendicular to the mounting profile. The 90 degree dynamic pivot nub requires no machining services and can be easily assembled, lending itself to repositioning and reuse. The hardware to mount the nub to a profile is included while the suggested mounting hardware to attach the arm to the nub can be found below.

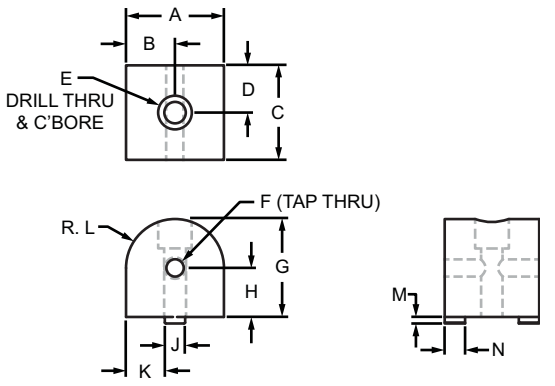

Part No.	Series	Color	A	B	C	D	E	F	G	H	J	K	L	M	N	Weight
4184	10	Clear	1.000"	.500"	.950"	.475"	1/4-20	1/4-20	1.000"	.500"	.245"	.377"	.500"	.060"	.211"	.095 lb
4184-Black	10	Black	1.000"	.500"	.950"	.475"	1/4-20	1/4-20	1.000"	.500"	.245"	.377"	.500"	.060"	.211"	.095 lb
4384	15	Clear	1.500"	.750"	1.448"	.724"	5/16-18	5/16-18	1.500"	.750"	.312"	0.594"	.750"	.100"	.312"	.311 lb
4384-Black	15	Black	1.500"	.750"	1.448"	.724"	5/16-18	5/16-18	1.500"	.750"	.312"	0.594"	.750"	.100"	.312"	.311 lb
25-4184	25	Clear	25.00mm	12.50mm	23.72mm	11.86mm	M6 x 1.0	M6 x 1.0	25.00mm	12.50mm	6.30mm	9.35mm	12.50mm	1.09mm	5.50mm	.0431 kg
25-4184-Black	25	Black	25.00mm	12.50mm	23.72mm	11.86mm	M6 x 1.0	M6 x 1.0	25.00mm	12.50mm	6.30mm	9.35mm	12.50mm	1.09mm	5.50mm	.0431 kg
40-4384	40	Clear	40.00mm	20.00mm	38.71mm	19.36mm	M8 x 1.25	M8 x 1.25	40.00mm	20.00mm	7.92mm	16.04mm	20.00mm	2.50mm	7.92mm	.1655 kg
40-4384-Black	40	Black	40.00mm	20.00mm	38.71mm	19.36mm	M8 x 1.25	M8 x 1.25	40.00mm	20.00mm	7.92mm	16.04mm	20.00mm	2.50mm	7.92mm	.1655 kg

Material Specifications

Material	Alloy*	Finish
Aluminum	6105-T5	Anodize

* Or comparable

Included Hardware (Mount Nub to T-Slot)

Part No.	Series	Qty.	Bolt	T-Nut
3306	10	1	1/4-20 x 1" SHCS	Economy
3613	15	1	5/16-18 x 1.5" SHCS	
75-3415	25	1	M6 x 25mm SHCS	
75-3479	40	1	M8 x 40mm SHCS	

Suggested Hardware (Mount Arm to Nub)

Part No.	Series	Qty.	Bolt Assembly
3501	10	1	5/16 x 1/4" Shoulder Bolt & Thrust Washer
3500	15	1	3/8 x 3/8" Shoulder Bolt & Thrust Washer
25-3501	25	1	6mm x 6mm Shoulder Bolt & Thrust Washer
40-3500	40	1	10mm x 10mm Shoulder Bolt & Thrust Washer

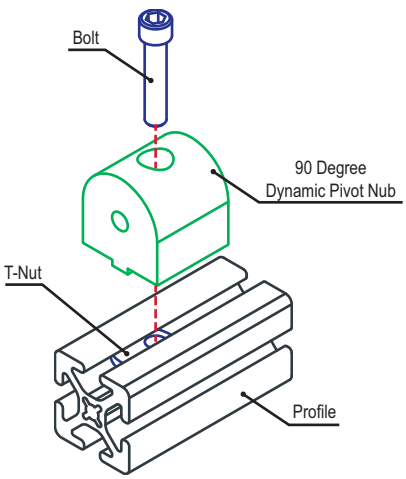

Universal Dynamic Pivot Nub

Part Description:

The universal dynamic pivot nub is commonly used to create either a perpendicular or parallel dynamic pivot with full axial motion ranging from 0-180 degrees. The universal pivot nub requires no machining and can be easily assembled, lending itself to repositioning and reuse. The hardware to mount the nub to a profile is included while the suggested mounting hardware to attach the arm to the nub can be found below.

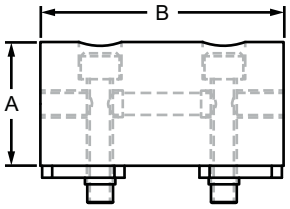

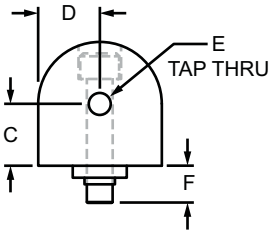

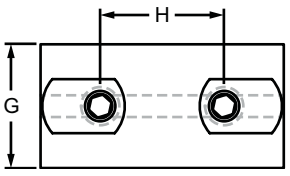

Part No.	Series	Color	A	B	C	D	E	F	G	H	Weight
4177	10	Clear	1.000"	1.950"	.500"	.500"	1/4-20	.275"	1.000"	1.000"	.200 lb
4177-Black	10	Black	1.000"	1.950"	.500"	.500"	1/4-20	.275"	1.000"	1.000"	.200 lb
4377	15	Clear	1.500"	2.948"	.750"	.750"	5/16-18	.450"	1.500"	1.500"	.635 lb
4377-Black	15	Black	1.500"	2.948"	.750"	.750"	5/16-18	.450"	1.500"	1.500"	.635 lb
25-4177	25	Clear	25.00mm	48.69mm	12.50mm	12.50mm	M6 x 1.0	6.88mm	25.00mm	25.00mm	.0871 kg
25-4177-Black	25	Black	25.00mm	48.69mm	12.50mm	12.50mm	M6 x 1.0	6.88mm	25.00mm	25.00mm	.0871 kg
40-4377	40	Clear	40.00mm	78.69mm	20.00mm	20.00mm	M8 x 1.25	11.43mm	40.00mm	40.00mm	.3344 kg
40-4377-Black	40	Black	40.00mm	78.69mm	20.00mm	20.00mm	M8 x 1.25	11.43mm	40.00mm	40.00mm	.3344 kg

Material Specifications

Material	Alloy*	Finish
Aluminum	6105-T5	Anodize

* Or comparable

Included Hardware (Mount Nub to T-Slot)

Part No.	Series	Qty.	Bolt	T-Nut
3306	10	2	1/4-20 x 1" SHCS	Economy
3613	15	2	5/16-18 x 1.5" SHCS	
75-3415	25	2	M6 x 25mm SHCS	
75-3480	40	2	M8 x 40mm SHCS	

Suggested Hardware (Mount Arm to Nub)

Part No.	Series	Qty.	Bolt Assembly
3501	10	1	5/16 x 1/4" Shoulder Bolt & Thrust Washer
3500	15	1	3/8 x 3/8" Shoulder Bolt & Thrust Washer
25-3501	25	1	6mm x 6mm Shoulder Bolt & Thrust Washer
40-3500	40	1	10mm x 10mm Shoulder Bolt & Thrust Washer

Part Description:

The 0 degree dynamic right angle pivot nub is commonly used as a connection hub for dynamic pivots to create axial motion ranging from 0-90 degrees parallel to the mounting profile. This pivot nub requires no machining services and can be easily assembled, lending itself to repositioning and reuse. The hardware to mount the nub to a profile is included while the suggested mounting hardware to attach the arm to the nub can be found below.

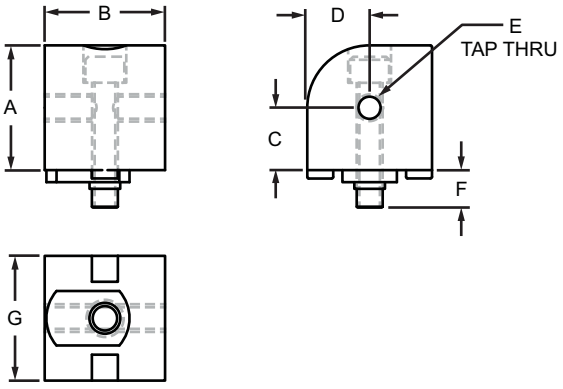

Part No.	Series	Color	A	B	C	D	E	F	G	Weight
4025	10	Clear	1.000"	.950"	.500"	.500"	1/4-20	.275"	1.000"	.102 lb
4025-Black	10	Black	1.000"	.950"	.500"	.500"	1/4-20	.275"	1.000"	.102 lb
4425	15	Clear	1.500"	1.448"	.750"	.750"	5/16-18	.450"	1.500"	.330 lb
4425-Black	15	Black	1.500"	1.448"	.750"	.750"	5/16-18	.450"	1.500"	.330 lb
25-4025	25	Clear	25.00mm	23.72mm	12.50mm	12.50mm	M6 x 1.0	6.88mm	25.00mm	.0450 kg
25-4025-Black	25	Black	25.00mm	23.72mm	12.50mm	12.50mm	M6 x 1.0	6.88mm	25.00mm	.0450 kg
40-4425	40	Clear	40.00mm	38.71mm	20.00mm	20.00mm	M8 x 1.25	11.43mm	40.00mm	.1736 kg
40-4425-Black	40	Black	40.00mm	38.71mm	20.00mm	20.00mm	M8 x 1.25	11.43mm	40.00mm	.1736 kg

Material Specifications

Material	Alloy*	Finish
Aluminum	6105-T5	Anodize

* Or comparable

Included Hardware (Mount Nub to T-Slot)

Part No.	Series	Qty.	Bolt	T-Nut
3306	10	1	1/4-20 x 1" SHCS	Economy
3613	15	1	5/16-18 x 1.5" SHCS	
75-3415	25	1	M6 x 25mm SHCS	
75-3479	40	1	M8 x 40mm SHCS	

Suggested Hardware (Mount Arm to Nub)

Part No.	Series	Qty.	Bolt Assembly
3501	10	1	5/16 x 1/4" Shoulder Bolt & Thrust Washer
3500	15	1	3/8 x 3/8" Shoulder Bolt & Thrust Washer
25-3501	25	1	6mm x 6mm Shoulder Bolt & Thrust Washer
40-3500	40	1	10mm x 10mm Shoulder Bolt & Thrust Washer

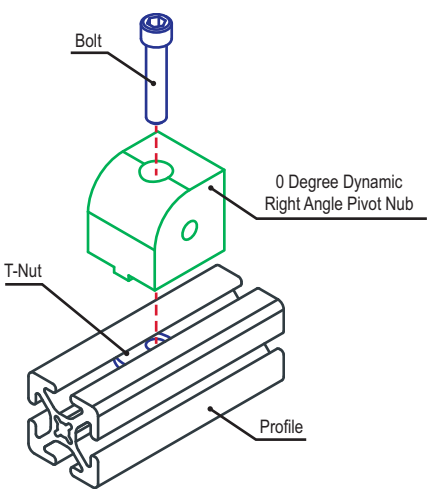

90 Degree Dynamic Right Angle Pivot Nub

Part Description:

The 90 degree dynamic right angle pivot nub is commonly used as a connection hub for dynamic pivots to create full axial motion ranging from 0-90 degrees perpendicular to the mounting profile. This pivot nub requires no machining services and can be easily assembled, lending itself to repositioning and reuse. The hardware to mount the nub to a profile is included while the suggested mounting hardware to attach the arm to the nub can be found below.

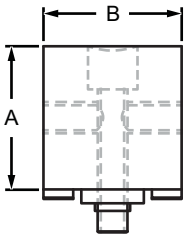

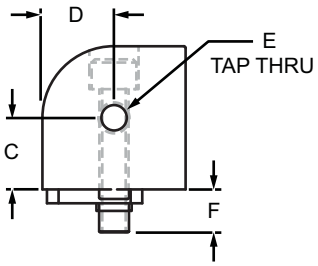

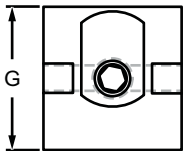

Part No.	Series	Color	A	B	C	D	E	F	G	Weight
4026	10	Clear	1.000"	.950"	.500"	.500"	1/4-20	.275"	1.000"	.102 lb
4026-Black	10	Black	1.000"	.950"	.500"	.500"	1/4-20	.275"	1.000"	.102 lb
4426	15	Clear	1.500"	1.448"	.750"	.750"	5/16-18	.450"	1.500"	.328 lb
4426-Black	15	Black	1.500"	1.448"	.750"	.750"	5/16-18	.450"	1.500"	.328 lb
25-4026	25	Clear	25.00mm	23.72mm	12.50mm	12.50mm	M6 x 1.0	6.88mm	25.00mm	.0450 kg
25-4026-Black	25	Black	25.00mm	23.72mm	12.50mm	12.50mm	M6 x 1.0	6.88mm	25.00mm	.0450 kg
40-4426	40	Clear	40.00mm	38.71mm	20.00mm	20.00mm	M8 x 1.25	11.43mm	40.00mm	.1742 kg
40-4426-Black	40	Black	40.00mm	38.71mm	20.00mm	20.00mm	M8 x 1.25	11.43mm	40.00mm	.1742 kg

Material Specifications

Material	Alloy*	Finish
Aluminum	6105-T5	Anodize

* Or comparable

Included Hardware (Mount Nub to T-Slot)

Part No.	Series	Qty.	Bolt	T-Nut
3306	10	1	1/4-20 x 1" SHCS	Economy
3613	15	1	5/16-18 x 1.5" SHCS	
75-3415	25	1	M6 x 25mm SHCS	
75-3479	40	1	M8 x 40mm SHCS	

Suggested Hardware (Mount Arm to Nub)

Part No.	Series	Qty.	Bolt Assembly
3501	10	1	5/16 x 1/4" Shoulder Bolt & Thrust Washer
3500	15	1	3/8 x 3/8" Shoulder Bolt & Thrust Washer
25-3501	25	1	6mm x 6mm Shoulder Bolt & Thrust Washer
40-3500	40	1	10mm x 10mm Shoulder Bolt & Thrust Washer

Universal Dynamic Right Angle Pivot Nub

Part Description:

The universal dynamic right angle pivot nub is commonly used to create either a perpendicular or parallel dynamic pivot with full axial motion ranging from 0-90 degrees. The universal pivot nub requires no machining and can be easily assembled, lending itself to repositioning and reuse. The hardware to mount the nub to a profile is included while the suggested mounting hardware to attach the arm to the nub can be found below.

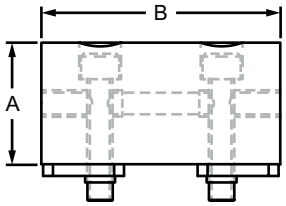

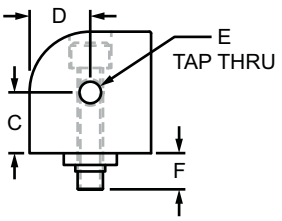

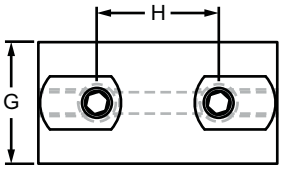

Part No.	Series	Color	A	B	C	D	E	F	G	H	Weight
4027	10	Clear	1.000"	1.950"	.500"	.500"	1/4-20	.275"	1.000"	1.000"	.20 lb
4027-Black	10	Black	1.000"	1.950"	.500"	.500"	1/4-20	.275"	1.000"	1.000"	.20 lb
4427	15	Clear	1.500"	2.948"	.750"	.750"	5/16-18	.450"	1.500"	1.500"	.672 lb
4427-Black	15	Black	1.500"	2.948"	.750"	.750"	5/16-18	.450"	1.500"	1.500"	.672 lb
25-4027	25	Clear	25.00mm	48.69mm	12.50mm	12.50mm	M6 x 1.0	6.88mm	25.00mm	25.00mm	.091 kg
25-4027-Black	25	Black	25.00mm	48.69mm	12.50mm	12.50mm	M6 x 1.0	6.88mm	25.00mm	25.00mm	.091 kg
40-4427	40	Clear	40.00mm	78.69mm	20.00mm	20.00mm	M8 x 1.25	11.43mm	40.00mm	40.00mm	.3503 kg
40-4427-Black	40	Black	40.00mm	78.69mm	20.00mm	20.00mm	M8 x 1.25	11.43mm	40.00mm	40.00mm	.3503 kg

Material Specifications

Material	Alloy*	Finish
Aluminum	6105-T5	Anodize

* Or comparable

Included Hardware (Mount Nub to T-Slot)

Part No.	Series	Qty.	Bolt	T-Nut
3306	10	2	1/4-20 x 1" SHCS	Economy
3613	15	2	5/16-18 x 1.5" SHCS	
75-3415	25	2	M6 x 25mm SHCS	
75-3480	40	2	M8 x 40mm SHCS	

Suggested Hardware (Mount Arm to Nub)

Part No.	Series	Qty.	Bolt Assembly
3501	10	1	5/16 x 1/4" Shoulder Bolt & Thrust Washer
3500	15	1	3/8 x 3/8" Shoulder Bolt & Thrust Washer
25-3501	25	1	6mm x 6mm Shoulder Bolt & Thrust Washer
40-3500	40	1	10mm x 10mm Shoulder Bolt & Thrust Washer

"L" Dynamic Pivot Arm

Part Description:

The "L" dynamic pivot arm is commonly used in assemblies to create a dynamic pivot; it provides a long-lasting connection and requires no machining services. The pivot arm can be easily assembled, lending itself to repositioning and reuse and has a permanently lubricated bronze bushing that acts as high-strength pivot point. The hardware to mount the pivot arm to the profile is included while the suggested hardware to connect the pivot arm to the nub can be found below. **Tip:** Pre-load your hardware prior to connecting profiles to simplify your assembly and save time.

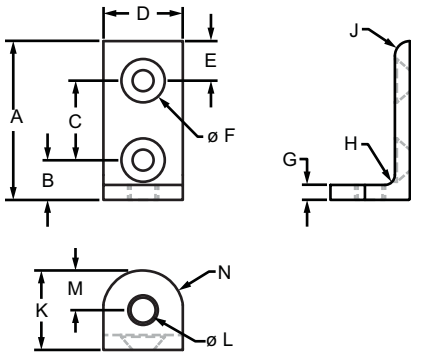

Part No.	Series	Color	A	B	C	D	E	F	G	H	J	K	L	M	N	Weight
4172	10	Clear	2.000"	.500"	1.000"	1.000"	.500"	.257"	.188"	.125"	.188"	1.000"	.312"	.500"	.505"	.079 lb
4172-Black	10	Black	2.000"	.500"	1.000"	1.000"	.500"	.257"	.188"	.125"	.188"	1.000"	.312"	.500"	.505"	.079 lb
4343	15	Clear	3.000"	.750"	1.500"	1.500"	.750"	.328"	.250"	.312"	.250"	1.500"	.375"	.750"	.755"	.215 lb
4343-Black	15	Black	3.000"	.750"	1.500"	1.500"	.750"	.328"	.250"	.312"	.250"	1.500"	.375"	.750"	.755"	.215 lb
25-4172	25	Clear	50.00mm	12.50mm	25.00mm	25.00mm	12.50mm	6.23mm	4.00mm	3.00mm	4.00mm	25.00mm	8.00mm	12.50mm	12.50mm	.0471 kg
25-4172-Black	25	Black	50.00mm	12.50mm	25.00mm	25.00mm	12.50mm	6.23mm	4.00mm	3.00mm	4.00mm	25.00mm	8.00mm	12.50mm	12.50mm	.0471 kg
40-4343	40	Clear	80.00mm	20.00mm	40.00mm	40.00mm	20.00mm	8.13mm	6.00mm	8.00mm	6.00mm	40.00mm	10.00mm	20.00mm	19.91mm	.1002 kg
40-4343-Black	40	Black	80.00mm	20.00mm	40.00mm	40.00mm	20.00mm	8.13mm	6.00mm	8.00mm	6.00mm	40.00mm	10.00mm	20.00mm	19.91mm	.1002 kg

Material Specifications

Material	Alloy*	Finish
Aluminum	6105-T5	Anodize

* Or comparable

Included Hardware (Mount Arm to T-Slot)

Part No.	Series	Qty.	Bolt	T-Nut
3414	10	2	1/4-20 x 1/2" FHSCS	Economy
3412	15	2	5/16-18 x 5/8" FHSCS	
75-3541	25	2	M6 x 10mm FHSCS	
75-3508	40	2	M8 x 16mm FHSCS	

Suggested Hardware (Mount Arm to Nub)

Part No.	Series	Qty.	Bolt Assembly
3501	10	1	5/16 x 1/4" Shoulder Bolt & Thrust Washer
3500	15	1	3/8 x 3/8" Shoulder Bolt & Thrust Washer
25-3501	25	1	6mm x 6mm Shoulder Bolt & Thrust Washer
40-3500	40	1	10mm x 10mm Shoulder Bolt & Thrust Washer

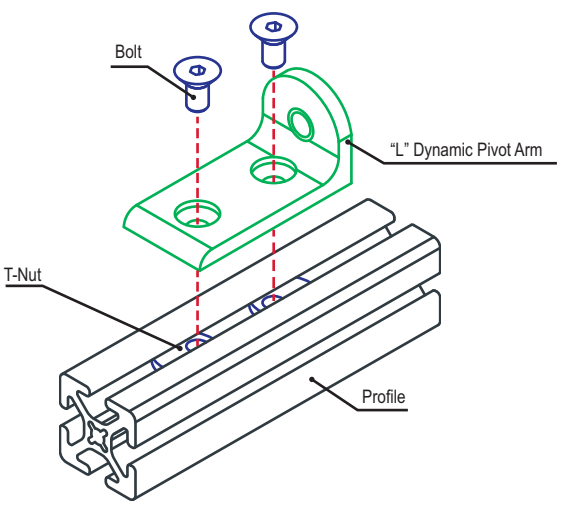

Part Description:

The standard straight dynamic pivot arm is typically used to create a dynamic pivot between profiles; it provides a long-lasting connection and requires no machining services. The pivot arm can be easily assembled, lending itself to repositioning and reuse and has a permanently lubricated bronze bushing that acts as a high-strength pivot point. The hardware to mount the pivot arm to the profile is included while the suggested hardware to connect the pivot arm to the nub can be found below. **Tip:** Pre-load your hardware prior to connecting profiles to simplify your assembly and save time.

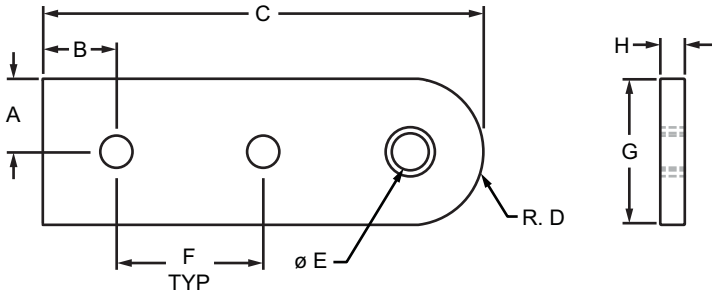

Part No.	Series	Color	A	B	C	D	E	F	G	H	Weight
4185	10	Clear	.500"	.500"	3.000"	.505"	.373"	1.000"	1.000"	.188"	.089 lb
4185-Black	10	Black	.500"	.500"	3.000"	.505"	.373"	1.000"	1.000"	.188"	.089 lb
4385	15	Clear	.745"	.750"	4.495"	.750"	.500"	1.500"	1.490"	.250"	.254 lb
4385-Black	15	Black	.745"	.750"	4.495"	.750"	.500"	1.500"	1.490"	.250"	.254 lb
25-4185	25	Clear	12.50mm	12.50mm	75.00mm	12.50mm	10.00mm	25.00mm	25.00mm	4.00mm	.0340 kg
25-4185-Black	25	Black	12.50mm	12.50mm	75.00mm	12.50mm	10.00mm	25.00mm	25.00mm	4.00mm	.0340 kg
40-4385	40	Clear	20.00mm	20.00mm	120.00mm	20.00mm	14.00mm	40.00mm	40.00mm	6.35mm	.1177 kg
40-4385-Black	40	Black	20.00mm	20.00mm	120.00mm	20.00mm	14.00mm	40.00mm	40.00mm	6.35mm	.1177 kg

Material Specifications

Material	Alloy*	Finish
Aluminum	6105-T5	Anodize

* Or comparable

Included Hardware (Mount Arm to T-Slot)

Part No.	Series	Qty.	Bolt	T-Nut
3356	10	2	1/4-20 x 1/2" FBHSCS	Double Economy
3355	15	2	5/16-18 x 11/16" SHCS	
75-3509	25	2	M6 x 10mm BHSCS	
75-3513	40	2	M8 x 16mm BHSCS	

Suggested Hardware (Mount Arm to Nub)

Part No.	Series	Qty.	Bolt Assembly
3501	10	1	5/16 x 1/4" Shoulder Bolt & Thrust Washer
3500	15	1	3/8 x 3/8" Shoulder Bolt & Thrust Washer
25-3501	25	1	6mm x 6mm Shoulder Bolt & Thrust Washer
40-3500	40	1	10mm x 10mm Shoulder Bolt & Thrust Washer

Standard 0 Degree Dynamic Pivot Assembly with Dual Straight Arms

Part Description:

The standard 0 degree dynamic pivot assembly with dual straight arms is typically used to create dynamic pivots that are parallel to the mounting profile and have full axial motion ranging from 0-180 degrees. The assembly includes one 0 degree dynamic pivot nub and two standard straight dynamic pivot arms. It has permanently lubricated bronze bushings that act as high-strength pivot points and nylon thrust washers that protect the pivot arms. This assembly offers a high load capacity while ensuring a long life cycle. A shim kit and the hardware to connect the nub to the profile, the nub to the arms, and the arms to the profile are all included.

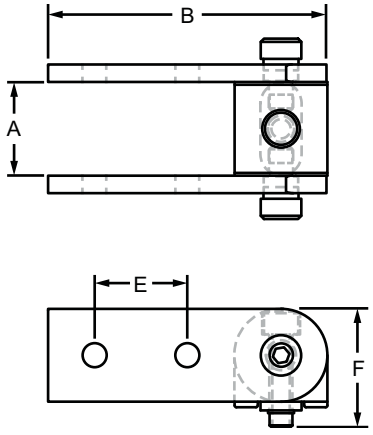

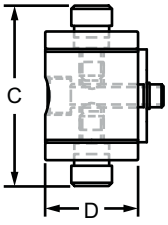

Part No.	Series	Nub (Qty.)	Arm (Qty.)	Color	A	B	C	D	E	F	Weight
4180	10	4181 (1)	4185 (2)	Clear	1.010"	3.010"	1.858"	1.000"	1.000"	1.275"	.315 lb
4180-Black	10	4181 (1)	4185 (2)	Black	1.010"	3.010"	1.858"	1.000"	1.000"	1.275"	.315 lb
4380	15	4381 (1)	4385 (2)	Clear	1.512"	4.500"	2.313"	1.500"	1.500"	1.950"	.883 lb
4380-Black	15	4381 (1)	4385 (2)	Black	1.512"	4.500"	2.313"	1.500"	1.500"	1.950"	.883 lb
25-4180	25	25-4181 (1)	25-4185 (2)	Clear	25.24mm	75.00mm	47.78mm	25.00mm	25.00mm	31.88mm	.1279 kg
25-4180-Black	25	25-4181 (1)	25-4185 (2)	Black	25.24mm	75.00mm	47.78mm	25.00mm	25.00mm	31.88mm	.1279 kg
40-4380	40	40-4381 (1)	40-4385 (2)	Clear	40.33mm	120.00mm	74.68mm	40.00mm	40.00mm	51.43mm	.4500 kg
40-4380-Black	40	40-4381 (1)	40-4385 (2)	Black	40.33mm	120.00mm	74.68mm	40.00mm	40.00mm	51.43mm	.4500 kg

Material Specifications

Material	Alloy*	Finish
Aluminum	6105-T5	Anodize

* Or comparable

Included Mounting Hardware

	Nub to Profile		Arms to Nub		Arms to Profile	
Series	Part No.	Qty.	Part No.	Qty.	Part No.	Qty.
10	3306	1	3501	1	3356	2
15	3613	1	3500	1	3355	2
25	75-3415	1	25-3501	1	75-3509	2
40	75-3479	1	40-3500	1	75-3513	2

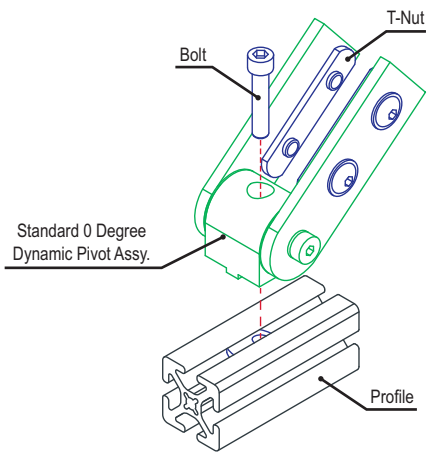

Standard 90 Degree Dynamic Pivot Assembly with Dual Straight Arms

Part Description:

The standard 90 degree dynamic pivot assembly with dual straight arms is typically used to create dynamic pivots that are perpendicular to the mounting profile and have full axial motion ranging from 0-180 degrees. The assembly includes one 90 degree dynamic pivot nub and two standard straight dynamic pivot arms. It has permanently lubricated bronze bushings that act as high-strength pivot points and nylon thrust washers that protect the arms. This assembly offers a high load capacity while ensuring a long life cycle. A shim kit and the hardware to connect the nub to the profile, the nub to the arms, and the arms to the profile are included.

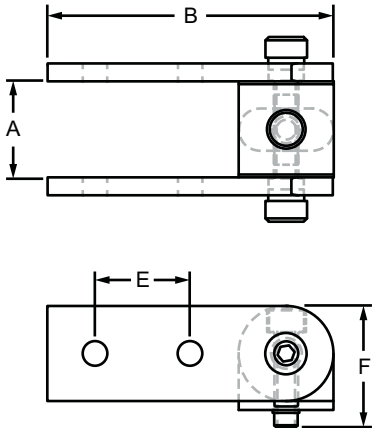

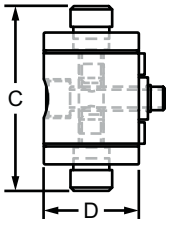

Part No.	Series	Nub (Qty.)	Arm (Qty.)	Color	A	B	C	D	E	F	Weight
4183	10	4184 (1)	4185 (2)	Clear	1.010"	3.010"	1.858"	1.000"	1.000"	1.275"	.314 lb
4183-Black	10	4184 (1)	4185 (2)	Black	1.010"	3.010"	1.858"	1.000"	1.000"	1.275"	.314 lb
4383	15	4381 (1)	4385 (2)	Clear	1.512"	4.500"	2.313"	1.500"	1.500"	1.950"	.889 lb
4383-Black	15	4381 (1)	4385 (2)	Black	1.512"	4.500"	2.313"	1.500"	1.500"	1.950"	.889 lb
25-4183	25	25-4184 (1)	25-4185 (2)	Clear	25.24mm	75.00mm	47.78mm	25.00mm	25.00mm	31.88mm	.1109 kg
25-4183-Black	25	25-4184 (1)	25-4185 (2)	Black	25.24mm	75.00mm	47.78mm	25.00mm	25.00mm	31.88mm	.1109 kg
40-4383	40	40-4381 (1)	40-4385 (2)	Clear	40.33mm	120.00mm	74.68mm	40.00mm	40.00mm	51.43mm	.4475 kg
40-4383-Black	40	40-4381 (1)	40-4385 (2)	Black	40.33mm	120.00mm	74.68mm	40.00mm	40.00mm	51.43mm	.4475 kg

Material Specifications

Material	Alloy*	Finish
Aluminum	6105-T5	Anodize

* Or comparable

Included Mounting Hardware

	Nub to Profile		Arms to Nub		Arms to Profile	
Series	Part No.	Qty.	Part No.	Qty.	Part No.	Qty.
10	3306	1	3501	1	3356	2
15	3613	1	3500	1	3355	2
25	75-3415	1	25-3501	1	75-3509	2
40	75-3479	1	40-3500	1	75-3513	2

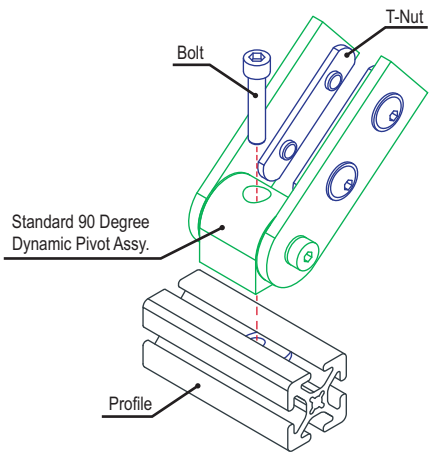

Standard Universal Dynamic Pivot Assembly with Dual Straight Arms

Part Description:

The standard universal dynamic pivot assembly with dual straight arms is typically used to create either a perpendicular or parallel dynamic pivot with full axial motion ranging from 0-180 degrees. The assembly includes one universal dynamic pivot nub and two standard straight dynamic pivot arms. It has permanently lubricated bronze bushings that act as high-strength pivot points and nylon thrust washers that protect the pivot arms. This assembly offers a high load capacity while ensuring a long life cycle. A shim kit and the hardware to connect the nub to the profile, the nub to the arms, and the arms to the profile are all included.

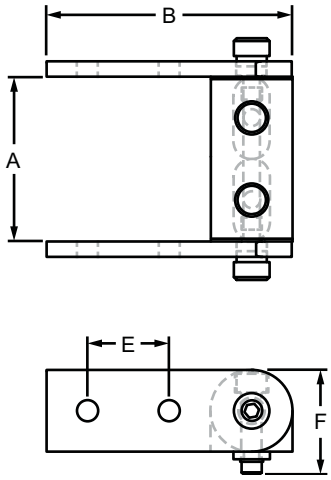

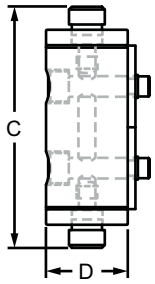

Part No.	Series	Nub (Qty.)	Arm (Qty.)	Color	A	B	C	D	E	F	Weight
4178	10	4177 (1)	4185 (2)	Clear	2.010"	3.010"	2.858"	1.000"	1.000"	1.275"	.409 lb
4178-Black	10	4177 (1)	4185 (2)	Black	2.010"	3.010"	2.858"	1.000"	1.000"	1.275"	.409 lb
4379	15	4377 (1)	4385 (2)	Clear	3.012"	4.500"	3.813"	1.500"	1.500"	1.950"	1.214 lb
4379-Black	15	4377 (1)	4385 (2)	Black	3.012"	4.500"	3.813"	1.500"	1.500"	1.950"	1.214 lb
25-4178	25	25-4177 (1)	25-4185 (2)	Clear	50.24mm	75.00mm	72.78mm	25.00mm	25.00mm	31.88mm	.1756 kg
25-4178-Black	25	25-4177 (1)	25-4185 (2)	Black	50.24mm	75.00mm	72.78mm	25.00mm	25.00mm	31.88mm	.1756 kg
40-4379	40	40-4377 (1)	40-4385 (2)	Clear	80.33mm	120.00mm	114.68mm	40.00mm	40.00mm	51.43mm	.6123 kg
40-4379-Black	40	40-4377 (1)	40-4385 (2)	Black	80.33mm	120.00mm	114.68mm	40.00mm	40.00mm	51.43mm	.6123 kg

Material Specifications

Material	Alloy*	Finish
Aluminum	6105-T5	Anodize

* Or comparable

Included Mounting Hardware

	Nub to Profile		Arms to Nub		Arms to Profile	
Series	Part No.	Qty.	Part No.	Qty.	Part No.	Qty.
10	3306	2	3501	1	3356	2
15	3613	2	3500	1	3355	2
25	75-3415	2	25-3501	1	75-3509	2
40	75-3479	2	40-3500	1	75-3513	2

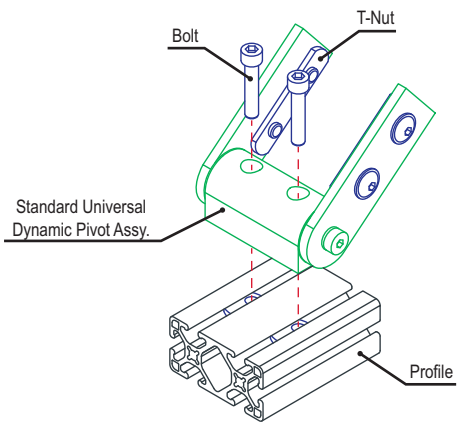

Standard 0 Degree Dynamic Pivot Assembly with Dual "L" Arms

Part Description:

The standard 0 degree dynamic pivot assembly with dual "L" arms is typically used to create dynamic pivots that are perpendicular to the mounting profile and have full axial motion ranging from 0-180 degrees. The assembly includes one 0 degree dynamic pivot nub and two "L" dynamic pivot arms. It has permanently lubricated bronze bushings that act as high-strength pivot points and nylon thrust washers that protect the pivot arms. This assembly offers a high load capacity while ensuring a long life cycle. The hardware to connect the nub to the profile, the nub to the arms, and the arms to the profile are all included.

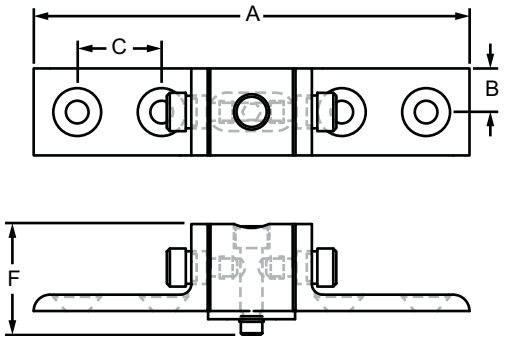

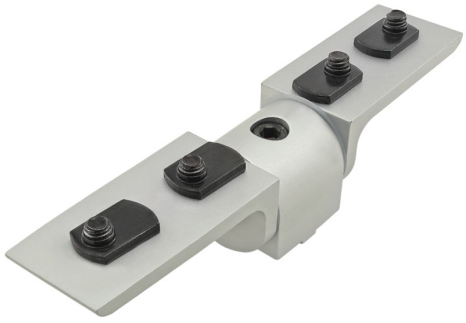

Part No.	Series	Nub (Qty.)	Arm (Qty.)	Color	A	B	C	D	E	F	Weight
4168	10	4181 (1)	4172 (2)	Clear	5.010"	.500"	1.000"	1.000"	1.060"	1.275"	.292 lb
4168-Black	10	4181 (1)	4172 (2)	Black	5.010"	.500"	1.000"	1.000"	1.060"	1.275"	.292 lb
4321	15	4381 (1)	4343 (2)	Clear	7.512"	.750"	1.500"	1.500"	1.600"	1.950"	.813 lb
4321-Black	15	4381 (1)	4343 (2)	Black	7.512"	.750"	1.500"	1.500"	1.600"	1.950"	.813 lb
25-4168	25	25-4181 (1)	25-4172 (2)	Clear	125.22mm	12.50mm	25.00mm	25.00mm	26.09mm	31.88mm	.1217 kg
25-4168-Black	25	25-4181 (1)	25-4172 (2)	Black	125.22mm	12.50mm	25.00mm	25.00mm	26.09mm	31.88mm	.1217 kg
40-4321	40	40-4381 (1)	40-4343 (2)	Clear	200.00mm	20.00mm	40.00mm	40.00mm	42.50mm	51.43mm	.4080 kg
40-4321-Black	40	40-4381 (1)	40-4343 (2)	Black	200.00mm	20.00mm	40.00mm	40.00mm	42.50mm	51.43mm	.4080 kg

Material Specifications

Material	Alloy*	Finish
Aluminum	6105-T5	Anodize

* Or comparable

Included Mounting Hardware

	Nub to Profile		Arms to Nub		Arms to Profile	
Series	Part No.	Qty.	Part No.	Qty.	Part No.	Qty.
10	3306	1	3501	1	3414	4
15	3613	1	3500	1	3412	4
25	75-3415	1	25-3501	1	75-3541	4
40	75-3479	1	40-3500	1	75-3508	4

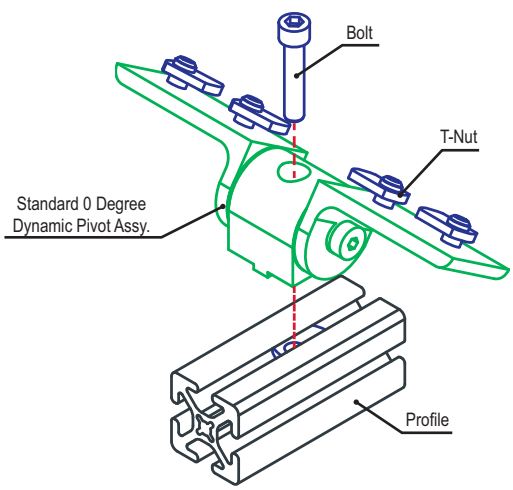

Standard 90 Degree Dynamic Pivot Assembly with Dual "L" Arms

Part Description:

The standard 90 degree dynamic pivot assembly with dual "L" arms is typically used to create dynamic pivots that are parallel to the mounting profile and have full axial motion ranging from 0-180 degrees. The assembly includes one 90 degree dynamic pivot nub and two "L" dynamic pivot arms. It has permanently lubricated bronze bushings that act as high-strength pivot points and nylon thrust washers that protect the pivot arms. This assembly offers a high load capacity while ensuring a long life cycle. The hardware to connect the nub to the profile, the nub to the arms, and the arms to the profile are all included.

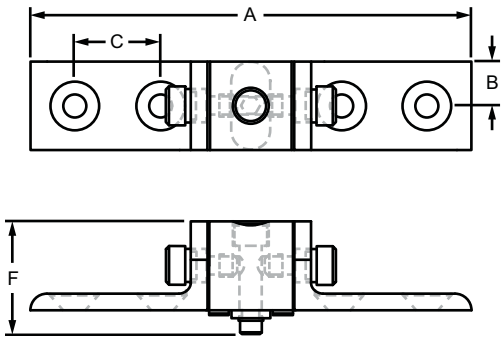

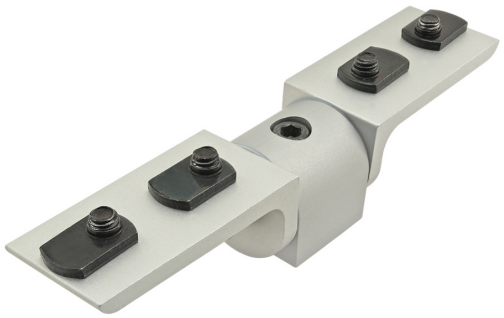

Part No.	Series	Nub (Qty.)	Arm (Qty.)	Color	A	B	C	D	E	F	Weight
4169	10	4184 (1)	4172 (2)	Clear	5.010"	.500"	1.000"	1.000"	1.000"	1.275"	.268 lb
4169-Black	10	4184 (1)	4172 (2)	Black	5.010"	.500"	1.000"	1.000"	1.000"	1.275"	.268 lb
4322	15	4384 (1)	4343 (2)	Clear	7.512"	.750"	1.500"	1.500"	1.500"	1.950"	.810 lb
4322-Black	15	4384 (1)	4343 (2)	Black	7.512"	.750"	1.500"	1.500"	1.500"	1.950"	.810 lb
25-4169	25	25-4184 (1)	25-4172 (2)	Clear	125.22mm	12.50mm	25.00mm	25.00mm	25.00mm	31.88mm	.1219 kg
25-4169-Black	25	25-4184 (1)	25-4172 (2)	Black	125.22mm	12.50mm	25.00mm	25.00mm	25.00mm	31.88mm	.1219 kg
40-4322	40	40-4384 (1)	40-4343 (2)	Clear	200.00mm	20.00mm	40.00mm	40.00mm	40.00mm	51.43mm	.4073 kg
40-4322-Black	40	40-4384 (1)	40-4343 (2)	Black	200.00mm	20.00mm	40.00mm	40.00mm	40.00mm	51.43mm	.4073 kg

Material Specifications

Material	Alloy*	Finish
Aluminum	6105-T5	Anodize

* Or comparable

Included Mounting Hardware

	Nub to Profile		Arms to Nub		Arms to Profile	
Series	Part No.	Qty.	Part No.	Qty.	Part No.	Qty.
10	3306	1	3501	1	3414	4
15	3613	1	3500	1	3412	4
25	75-3415	1	25-3501	1	75-3541	4
40	75-3479	1	40-3500	1	75-3508	4

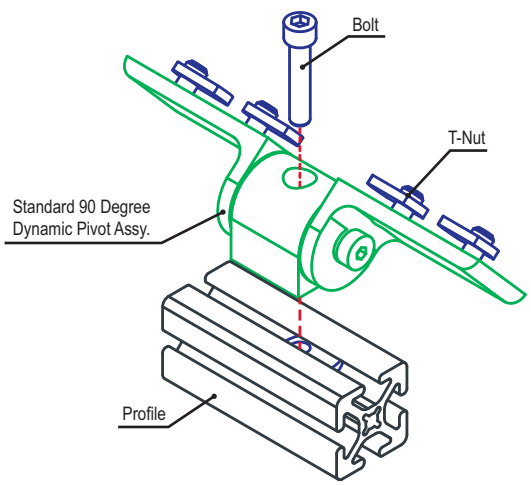

Standard Universal Dynamic Pivot Assembly with Dual "L" Arms

Part Description:

The standard universal dynamic pivot assembly with dual "L" arms is typically used to create either a perpendicular or parallel dynamic pivot with full axial motion ranging from 0-180 degrees. The assembly includes one universal dynamic pivot nub and two "L" dynamic pivot arms. It has permanently lubricated bronze bushings that act as high-strength pivot points and nylon thrust washers that protect the pivot arms. This assembly offers a high load capacity while ensuring a long life cycle. The hardware to connect the nub to the profile, the nub to the arms, and the arms to the profile are all included.

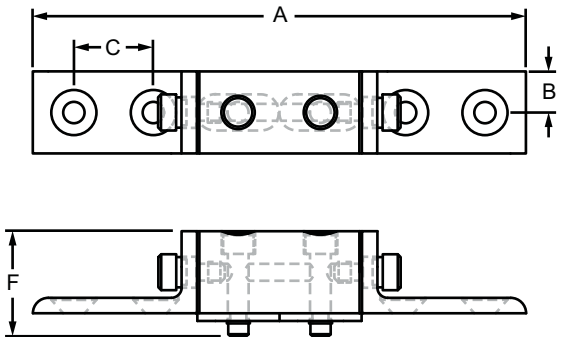

Part No.	Series	Nub (Qty.)	Arm (Qty.)	Color	A	B	C	D	E	F	Weight
4171	10	4177 (1)	4172 (2)	Clear	6.010"	.500"	1.000"	1.000"	1.000"	1.275"	.391 lb
4171-Black	10	4177 (1)	4172 (2)	Black	6.010"	.500"	1.000"	1.000"	1.000"	1.275"	.391 lb
4323	15	4377 (1)	4343 (2)	Clear	9.012"	.750"	1.500"	1.500"	1.500"	1.950"	1.275 lb
4323-Black	15	4377 (1)	4343 (2)	Black	9.012"	.750"	1.500"	1.500"	1.500"	1.950"	1.275 lb
25-4171	25	25-4177 (1)	25-4172 (2)	Clear	150.22mm	12.50mm	25.00mm	25.00mm	25.00mm	31.88mm	.1667 kg
25-4171-Black	25	25-4177 (1)	25-4172 (2)	Black	150.22mm	12.50mm	25.00mm	25.00mm	25.00mm	31.88mm	.1667 kg
40-4323	40	40-4377 (1)	40-4343 (2)	Clear	240.22mm	20.00mm	40.00mm	40.00mm	40.00mm	51.43mm	.5797 kg
40-4323-Black	40	40-4377 (1)	40-4343 (2)	Black	240.22mm	20.00mm	40.00mm	40.00mm	40.00mm	51.43mm	.5797 kg

Material Specifications

Material	Alloy*	Finish
Aluminum	6105-T5	Anodize

* Or comparable

Included Mounting Hardware

	Nub to Profile		Arms to Nub		Arms to Profile	
Series	Part No.	Qty.	Part No.	Qty.	Part No.	Qty.
10	3306	2	3501	1	3414	4
15	3613	2	3500	1	3412	4
25	75-3415	2	25-3501	1	75-3541	4
40	75-3479	2	40-3500	1	75-3508	4

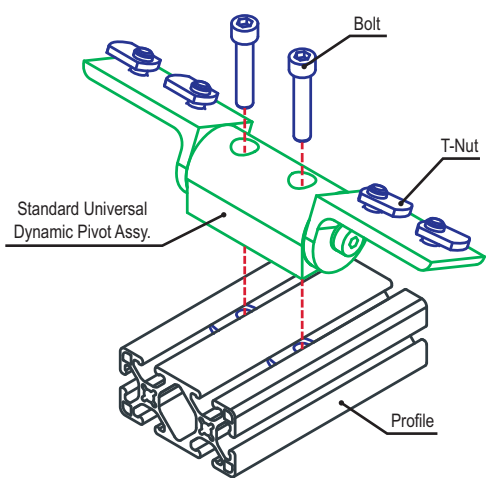

Standard 0 Degree Dynamic Pivot Assembly with Straight and "L" Arm

Part Description:

The standard 0 degree dynamic pivot assembly with straight and "L" arm is typically used to create dynamic pivots that are parallel to the mounting profile and have full axial motion ranging from 0-180 degrees. The assembly includes one 0 degree dynamic pivot nub, one standard straight dynamic pivot arm, and one "L" dynamic pivot arm. It has permanently lubricated bronze bushings that act as high-strength pivot points and nylon thrust washers that protect the pivot arms. This assembly offers a high load capacity while ensuring a long life cycle. The hardware to connect the nub to the profile, the nub to the arms, and the arms to the profile are all included.

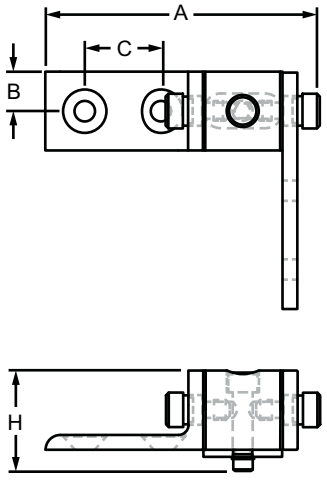

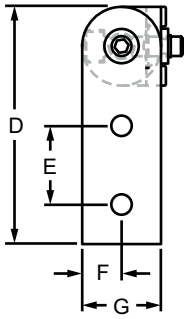

Part No.	Series	Nub (Qty.)	Arm (Qty.)	Color	A	B	C	D	E	F	G	H	Weight
4161	10	4181 (1)	4185 (1) 4172 (1)	Clear	3.448"	.500"	1.000"	3.010"	1.000"	.500"	1.000"	1.275"	.296 lb
4161-Black	10	4181 (1)	4185 (1) 4172 (1)	Black	3.448"	.500"	1.000"	3.010"	1.000"	.500"	1.000"	1.275"	.296 lb
4363	15	4381 (1)	4385 (1) 4343 (1)	Clear	5.074"	.750"	1.500"	4.500"	1.500"	.750"	1.500"	1.950"	.848 lb
4363-Black	15	4381 (1)	4385 (1) 4343 (1)	Black	5.074"	.750"	1.500"	4.500"	1.500"	.750"	1.500"	1.950"	.848 lb

Material Specifications

Material	Alloy*	Finish
Aluminum	6105-T5	Anodize

* Or comparable

Included Mounting Hardware

	Nub to Profile		Arms to Nub		Arms to Profile				
Series	Part No.	Qty.	Part No.	Qty.	Part No.	Qty.	AND	Part No.	Qty.
10	3306	1	3501	1	3356	1		3414	2
15	3613	1	3500	1	3355	1		3412	2

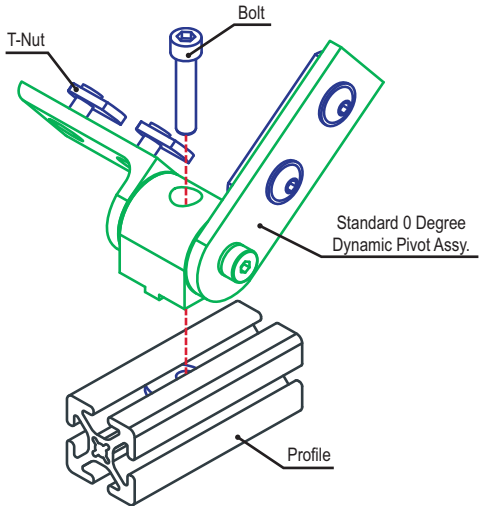

Standard 90 Degree Dynamic Pivot Assembly with Straight and "L" Arm

Part Description:

The standard 90 degree dynamic pivot assembly with straight and "L" arm is typically used to create dynamic pivots that are perpendicular to the mounting profile and have full axial motion ranging from 0-180 degrees. The assembly includes one 90 degree dynamic pivot nub, one standard straight dynamic pivot arm, and one "L" dynamic pivot arm. It has permanently lubricated bronze bushings that act as high-strength pivot points and nylon thrust washers that protect the pivot arms. This assembly offers a high load capacity while ensuring a long life cycle. The hardware to connect the nub to the profile, the nub to the arms, and the arms to the profile are all included.

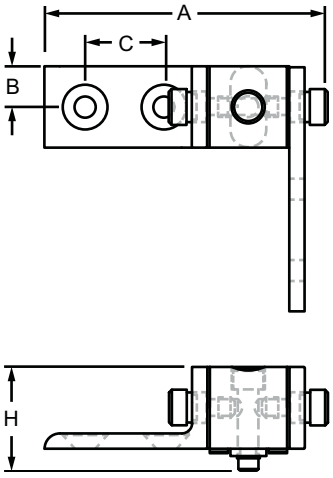

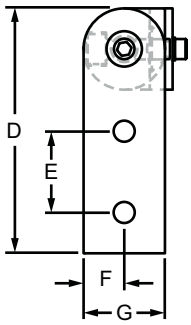

Part No.	Series	Nub (Qty.)	Arm (Qty.)	Color	A	B	C	D	E	F	G	H	Weight
4162	10	4184 (1)	4185 (1) 4172 (1)	Clear	3.448"	.500"	1.000"	3.010"	1.000"	.500"	1.000"	1.275"	.295 lb
4162-Black	10	4184 (1)	4185 (1) 4172 (1)	Black	3.448"	.500"	1.000"	3.010"	1.000"	.500"	1.000"	1.275"	.295 lb
4364	15	4384 (1)	4385 (1) 4343 (1)	Clear	5.074"	.750"	1.500"	4.500"	1.500"	.750"	1.500"	1.950"	.849 lb
4364-Black	15	4384 (1)	4385 (1) 4343 (1)	Black	5.074"	.750"	1.500"	4.500"	1.500"	.750"	1.500"	1.950"	.849 lb

Material Specifications

Material	Alloy*	Finish
Aluminum	6105-T5	Anodize

* Or comparable

Included Mounting Hardware

	Nub to Profile		Arms to Nub		Arms to Profile				
Series	Part No.	Qty.	Part No.	Qty.	Part No.	Qty.	AND	Part No.	Qty.
10	3306	1	3501	1	3356	1		3414	2
15	3613	1	3500	1	3355	1		3412	2

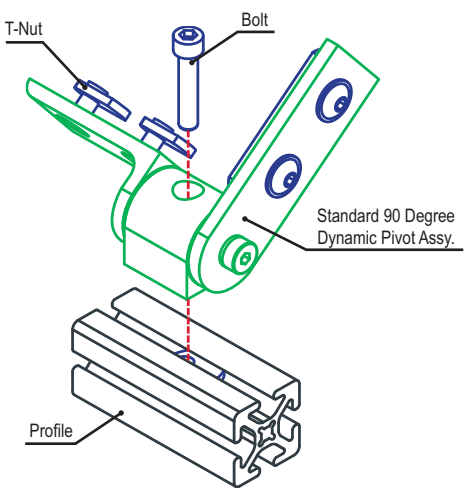

Standard Universal Dynamic Pivot Assembly with Straight and "L" Arm

Part Description:

The standard universal dynamic pivot assembly with straight and "L" arm is typically used to create either a perpendicular or parallel dynamic pivot with full axial motion ranging from 0-180 degrees. The assembly includes one universal dynamic pivot nub, one standard straight dynamic pivot arm, and one "L" dynamic pivot arm. It has permanently lubricated bronze bushings that act as high-strength pivot points and nylon thrust washers that protect the pivot arms. This assembly offers a high load capacity while ensuring a long life cycle. The hardware to connect the nub to the profile, the nub to the arms, and the arms to the profile are all included.

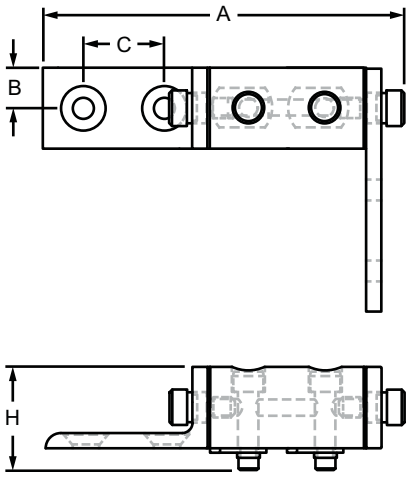

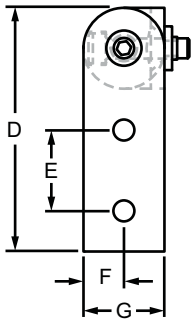

Part No.	Series	Nub (Qty.)	Arm (Qty.)	Color	A	B	C	D	E	F	G	H	Weight
4163	10	4177 (1)	4185 (1) 4172 (1)	Clear	4.448"	.500"	1.000"	3.010"	1.000"	.500"	1.000"	1.275"	.399 lb
4163-Black	10	4177 (1)	4185 (1) 4172 (1)	Black	4.448"	.500"	1.000"	3.010"	1.000"	.500"	1.000"	1.275"	.399 lb
4313	15	4377 (1)	4385 (1) 4343 (1)	Clear	6.574"	.750"	1.500"	4.500"	1.500"	.750"	1.500"	1.950"	1.178 lb
4313-Black	15	4377 (1)	4385 (1) 4343 (1)	Black	6.574"	.750"	1.500"	4.500"	1.500"	.750"	1.500"	1.950"	1.178 lb

Material Specifications

Material	Alloy*	Finish
Aluminum	6105-T5	Anodize

* Or comparable

Included Mounting Hardware

	Nub to Profile		Arms to Nub		Arms to Profile				
Series	Part No.	Qty.	Part No.	Qty.	Part No.	Qty.	AND	Part No.	Qty.
10	3306	2	3501	1	3356	1		3414	2
15	3613	2	3500	1	3355	1		3412	2

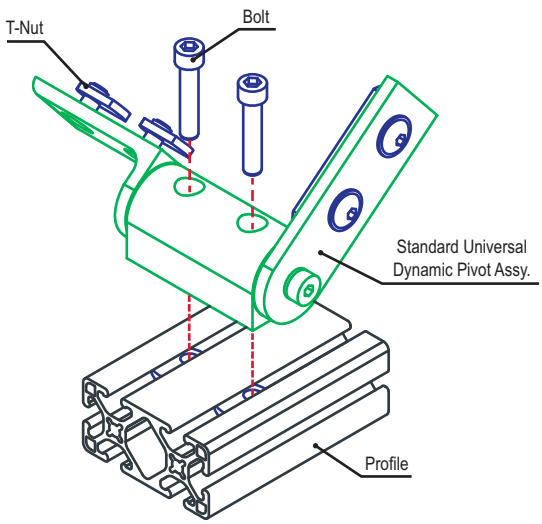

Right Angle 0 Degree Dynamic Pivot Assembly with Dual Straight Arms

Part Description:

The right angle 0 degree dynamic pivot assembly with dual straight arms is typically used to create dynamic pivots that are parallel to the mounting profile and have full axial motion ranging from 0-90 degrees. The assembly includes one 0 degree dynamic right angle pivot nub and two standard straight dynamic pivot arms. It has permanently lubricated bronze bushings that act as high-strength pivot points and nylon thrust washers that protect the pivot arms. This assembly offers a high load capacity while ensuring a long life cycle. A shim kit and the hardware to connect the nub to the profile, the nub to the arms, and the arms to the profile are all included.

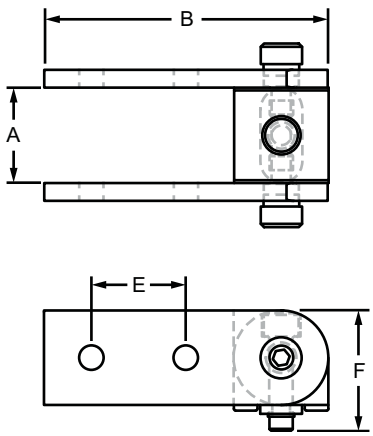

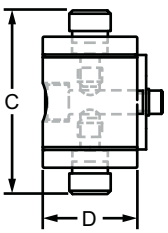

Part No.	Series	Nub (Qty.)	Arm (Qty.)	Color	A	B	C	D	E	F	Weight
4028	10	4025 (1)	4185 (2)	Clear	1.010"	3.010"	1.858"	1.000"	1.000"	1.275"	.312 lb
4028-Black	10	4025 (1)	4185 (2)	Black	1.010"	3.010"	1.858"	1.000"	1.000"	1.275"	.312 lb
4428	15	4425 (1)	4385 (2)	Clear	1.512"	4.500"	2.313"	1.500"	1.500"	1.950"	.903 lb
4428-Black	15	4425 (1)	4385 (2)	Black	1.512"	4.500"	2.313"	1.500"	1.500"	1.950"	.903 lb
25-4028	25	25-4025 (1)	25-4185 (2)	Clear	25.24mm	75.00mm	47.78mm	25.00mm	25.00mm	31.88mm	.1325 kg
25-4028-Black	25	25-4025 (1)	25-4185 (2)	Black	25.24mm	75.00mm	47.78mm	25.00mm	25.00mm	31.88mm	.1325 kg
40-4428	40	40-4425 (1)	40-4385 (2)	Clear	40.33mm	120.00mm	74.68mm	40.00mm	40.00mm	51.43mm	.4645 kg
40-4428-Black	40	40-4425 (1)	40-4385 (2)	Black	40.33mm	120.00mm	74.68mm	40.00mm	40.00mm	51.43mm	.4645 kg

Material Specifications

Material	Alloy*	Finish
Aluminum	6105-T5	Anodize

* Or comparable

Included Mounting Hardware

	Nub to Profile		Arms to Nub		Arms to Profile	
Series	Part No.	Qty.	Part No.	Qty.	Part No.	Qty.
10	3306	1	3501	1	3356	2
15	3613	1	3500	1	3355	2
25	75-3415	1	25-3501	1	75-3509	2
40	75-3479	1	40-3500	1	75-3513	2

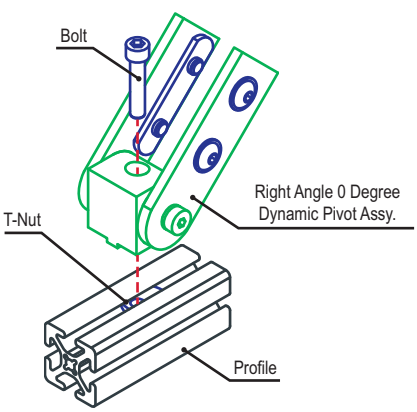

Right Angle 90 Degree Dynamic Pivot Assembly with Dual Straight Arms

Part Description:

The right angle 90 degree dynamic pivot assembly with dual straight arms is typically used to create dynamic pivots that are perpendicular to the mounting profile and have full axial motion ranging from 0-90 degrees. The assembly includes one 90 degree dynamic right angle pivot nub and two standard straight dynamic pivot arms. It has permanently lubricated bronze bushings that act as high-strength pivot points and nylon thrust washers that protect the arms. This assembly offers a high load capacity while ensuring a long life cycle. A shim kit and the hardware to connect the nub to the profile, the nub to the arms, and the arms to the profile are all included.

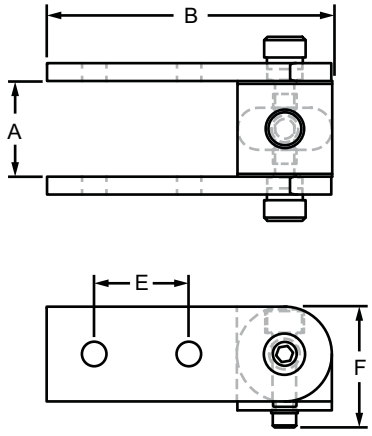

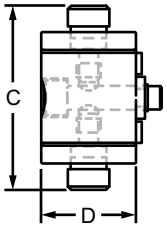

Part No.	Series	Nub (Qty.)	Arm (Qty.)	Color	A	B	C	D	E	F	Weight
4029	10	4026 (1)	4185 (2)	Clear	1.010"	3.010"	1.858"	1.000"	1.000"	1.275"	.311 lb
4029-Black	10	4026 (1)	4185 (2)	Black	1.010"	3.010"	1.858"	1.000"	1.000"	1.275"	.311 lb
4429	15	4426 (1)	4385 (2)	Clear	1.512"	4.500"	2.313"	1.500"	1.500"	1.950"	.903 lb
4429-Black	15	4426 (1)	4385 (2)	Black	1.512"	4.500"	2.313"	1.500"	1.500"	1.950"	.903 lb
25-4029	25	25-4026 (1)	25-4185 (2)	Clear	25.24mm	75.00mm	47.78mm	25.00mm	25.00mm	31.88mm	.1324 kg
25-4029-Black	25	25-4026 (1)	25-4185 (2)	Black	25.24mm	75.00mm	47.78mm	25.00mm	25.00mm	31.88mm	.1324 kg
40-4429	40	40-4426 (1)	40-4385 (2)	Clear	40.33mm	120.00mm	74.68mm	40.00mm	40.00mm	51.43mm	.4573 kg
40-4429-Black	40	40-4426 (1)	40-4385 (2)	Black	40.33mm	120.00mm	74.68mm	40.00mm	40.00mm	51.43mm	.4573 kg

Material Specifications

Material	Alloy*	Finish
Aluminum	6105-T5	Anodize

* Or comparable

Included Mounting Hardware

	Nub to Profile		Arms to Nub		Arms to Profile	
Series	Part No.	Qty.	Part No.	Qty.	Part No.	Qty.
10	3306	1	3501	1	3356	2
15	3613	1	3500	1	3355	2
25	75-3415	1	25-3501	1	75-3509	2
40	75-3479	1	40-3500	1	75-3513	2

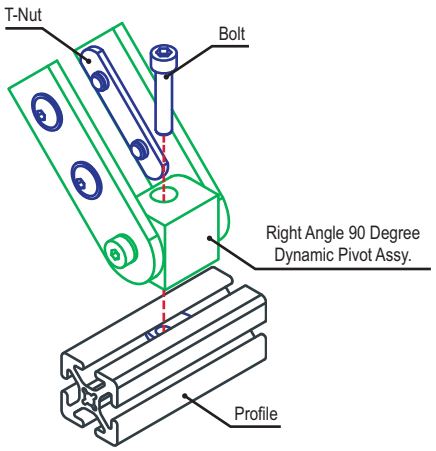

Right Angle Universal Dynamic Pivot Assembly with Dual Straight Arms

Part Description:

The right angle universal dynamic pivot assembly with dual straight arms is typically used to create either a perpendicular or parallel dynamic pivot with full axial motion ranging from 0-90 degrees. The assembly includes one universal dynamic right angle pivot nub and two standard straight dynamic pivot arms. It has permanently lubricated bronze bushings that act as high-strength pivot points and nylon thrust washers that protect the pivot arms. This assembly offers a high load capacity while ensuring a long life cycle. A shim kit and the hardware to connect the nub to the profile, the nub to the arms, and the arms to the profile are all included.

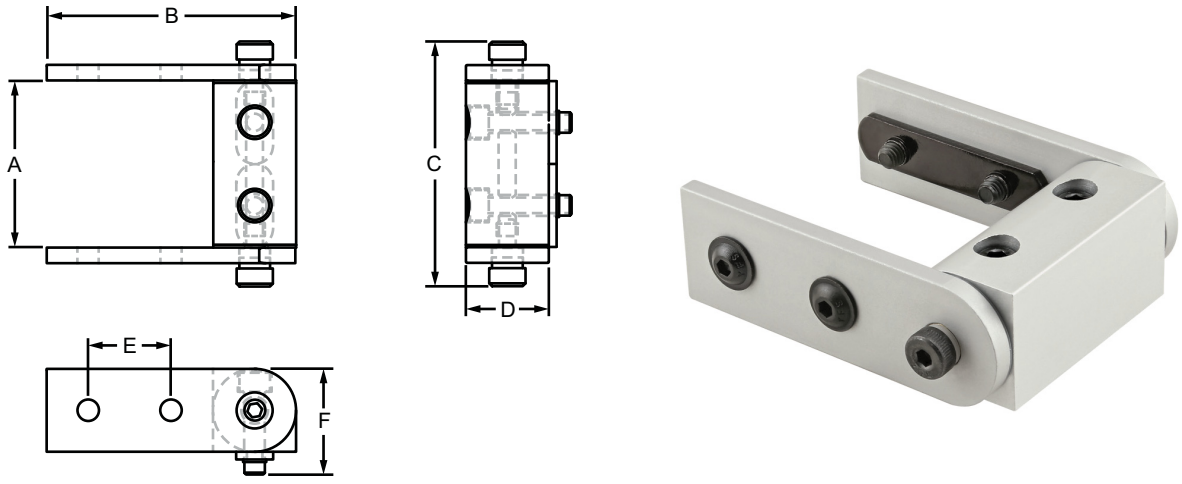

Part No.	Series	Nub (Qty.)	Arm (Qty.)	Color	A	B	C	D	E	F	Weight
4030	10	4027 (1)	4185 (2)	Clear	2.010"	3.010"	2.858"	1.000"	1.000"	1.275"	.417 lb
4030-Black	10	4027 (1)	4185 (2)	Black	2.010"	3.010"	2.858"	1.000"	1.000"	1.275"	.417 lb
4430	15	4427 (1)	4385 (2)	Clear	3.012"	4.500"	3.813"	1.500"	1.500"	1.950"	1.252 lb
4430-Black	15	4427 (1)	4385 (2)	Black	3.012"	4.500"	3.813"	1.500"	1.500"	1.950"	1.252 lb
25-4030	25	25-4027 (1)	25-4185 (2)	Clear	50.24mm	75.00mm	72.78mm	25.00mm	25.00mm	31.88mm	.1793 kg
25-4030-Black	25	25-4027 (1)	25-4185 (2)	Black	50.24mm	75.00mm	72.78mm	25.00mm	25.00mm	31.88mm	.1793 kg
40-4430	40	40-4427 (1)	40-4385 (2)	Clear	80.33mm	120.00mm	114.68mm	40.00mm	40.00mm	51.43mm	.6331 kg
40-4430-Black	40	40-4427 (1)	40-4385 (2)	Black	80.33mm	120.00mm	114.68mm	40.00mm	40.00mm	51.43mm	.6331 kg

Material Specifications

Material	Alloy*	Finish
Aluminum	6105-T5	Anodize

* Or comparable

Included Mounting Hardware

	Nub to Profile		Arms to Nub		Arms to Profile	
Series	Part No.	Qty.	Part No.	Qty.	Part No.	Qty.
10	3306	2	3501	1	3356	2
15	3613	2	3500	1	3355	2
25	75-3415	2	25-3501	1	75-3509	2
40	75-3479	2	40-3500	1	75-3513	2

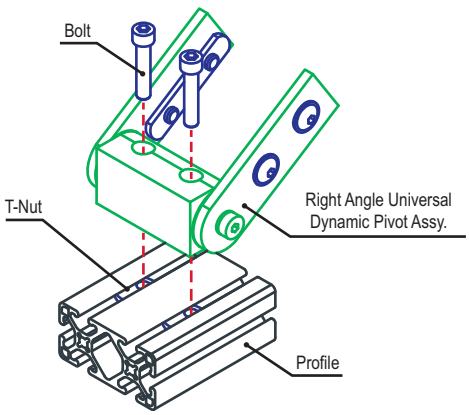

Right Angle 0 Degree Dynamic Pivot Assembly with Dual "L" Arms

Part Description:

The right angle 0 degree dynamic pivot assembly with dual "L" arms is typically used to create dynamic pivots that are perpendicular to the mounting profile and have full axial motion ranging from 0-90 degrees. The assembly includes one 0 degree dynamic right angle pivot nub and two "L" dynamic pivot arms. It has permanently lubricated bronze bushings that act as high-strength pivot points and nylon thrust washers that protect the pivot arms. This assembly offers a high load capacity while ensuring a long life cycle. The hardware to connect the nub to the profile, the nub to the arms, and the arms to the profile are all included.

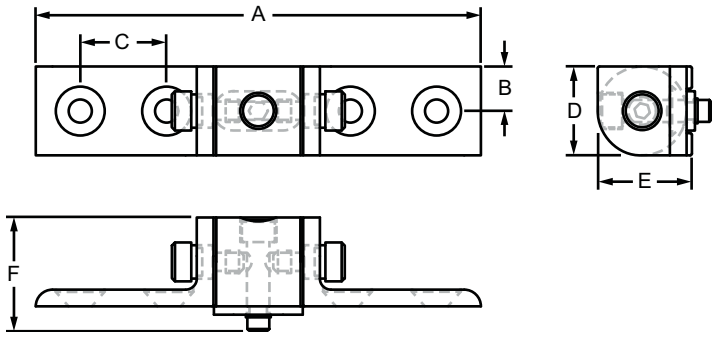

Part No.	Series	Nub (Qty.)	Arm (Qty.)	Color	A	B	C	D	E	F	Weight
4031	10	4025 (1)	4172 (2)	Clear	5.010"	.500"	1.000"	1.000"	1.060"	1.275"	.291 lb
4031-Black	10	4025 (1)	4172 (2)	Black	5.010"	.500"	1.000"	1.000"	1.060"	1.275"	.291 lb
4431	15	4425 (1)	4343 (2)	Clear	7.512"	.750"	1.500"	1.500"	1.600"	1.950"	.828 lb
4431-Black	15	4425 (1)	4343 (2)	Black	7.512"	.750"	1.500"	1.500"	1.600"	1.950"	.828 lb
25-4031	25	25-4025 (1)	25-4172 (2)	Clear	125.22mm	12.50mm	25.00mm	25.00mm	26.09mm	31.88mm	.1240 kg
25-4031-Black	25	25-4025 (1)	25-4172 (2)	Black	125.22mm	12.50mm	25.00mm	25.00mm	26.09mm	31.88mm	.1240 kg
40-4431	40	40-4425 (1)	40-4343 (2)	Clear	200.22mm	20.00mm	40.00mm	40.00mm	42.50mm	51.43mm	.4157 kg
40-4431-Black	40	40-4425 (1)	40-4343 (2)	Black	200.22mm	20.00mm	40.00mm	40.00mm	42.50mm	51.43mm	.4157 kg

Material Specifications

Material	Alloy*	Finish
Aluminum	6105-T5	Anodize

* Or comparable

Included Mounting Hardware

	Nub to Profile		Arms to Nub		Arms to Profile	
Series	Part No.	Qty.	Part No.	Qty.	Part No.	Qty.
10	3306	1	3501	1	3414	4
15	3613	1	3500	1	3412	4
25	75-3415	1	25-3501	1	75-3541	4
40	75-3479	1	40-3500	1	75-3508	4

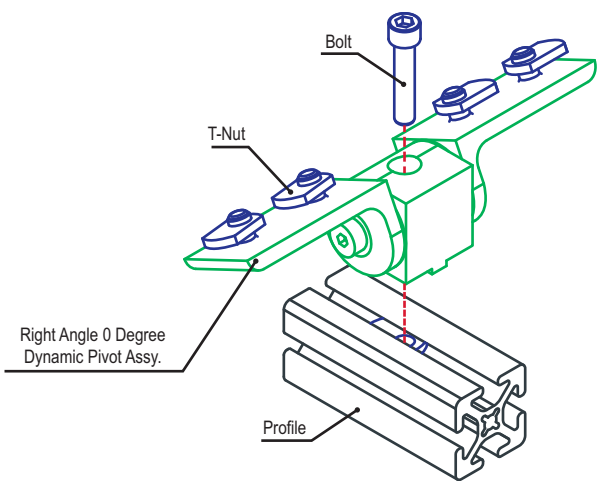

Right Angle 90 Degree Dynamic Pivot Assembly with Dual "L" Arms

Part Description:

The right angle 90 degree dynamic pivot assembly with dual "L" arms is typically used to create dynamic pivots that are parallel to the mounting profile and have full axial motion ranging from 0-90 degrees. The assembly includes one 90 degree dynamic right angle pivot nub and two "L" dynamic pivot arms. It has permanently lubricated bronze bushings that act as high-strength pivot points and nylon thrust washers that protect the pivot arms. This assembly offers a high load capacity while ensuring a long life cycle. The hardware to connect the nub to the profile, the nub to the arms, and the arms to the profile are all included.

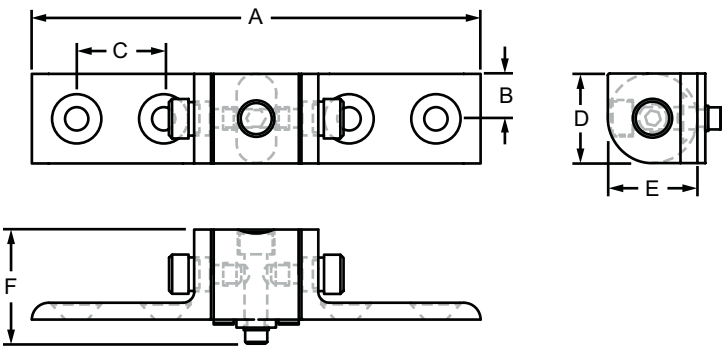

Part No.	Series	Nub (Qty.)	Arm (Qty.)	Color	A	B	C	D	E	F	Weight
4032	10	4026 (1)	4172 (2)	Clear	5.010"	.500"	1.000"	1.000"	1.000"	1.275"	.291 lb
4032-Black	10	4026 (1)	4172 (2)	Black	5.010"	.500"	1.000"	1.000"	1.000"	1.275"	.291 lb
4432	15	4426 (1)	4343 (2)	Clear	7.512"	.750"	1.500"	1.500"	1.500"	1.950"	.827 lb
4432-Black	15	4426 (1)	4343 (2)	Black	7.512"	.750"	1.500"	1.500"	1.500"	1.950"	.827 lb
25-4032	25	25-4026 (1)	25-4172 (2)	Clear	125.22mm	12.50mm	25.00mm	25.00mm	25.00mm	31.88mm	.1236 kg
25-4032-Black	25	25-4026 (1)	25-4172 (2)	Black	125.22mm	12.50mm	25.00mm	25.00mm	25.00mm	31.88mm	.1236 kg
40-4432	40	40-4426 (1)	40-4343 (2)	Clear	200.22mm	20.00mm	40.00mm	40.00mm	40.00mm	51.43mm	.4164 kg
40-4432-Black	40	40-4426 (1)	40-4343 (2)	Black	200.22mm	20.00mm	40.00mm	40.00mm	40.00mm	51.43mm	.4164 kg

Material Specifications

Material	Alloy*	Finish
Aluminum	6105-T5	Anodize

* Or comparable

Included Mounting Hardware

	Nub to Profile		Arms to Nub		Arms to Profile	
Series	Part No.	Qty.	Part No.	Qty.	Part No.	Qty.
10	3306	1	3501	1	3414	4
15	3613	1	3500	1	3412	4
25	75-3415	1	25-3501	1	75-3541	4
40	75-3479	1	40-3500	1	75-3508	4

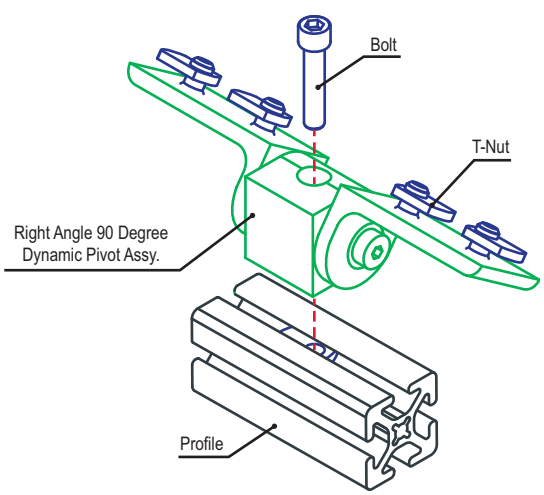

Right Angle Universal Dynamic Pivot Assembly with Dual "L" Arms

Part Description:

The right angle universal dynamic pivot assembly with dual "L" arms is typically used to create either a perpendicular or parallel dynamic pivot with full axial motion ranging from 0-90 degrees. The assembly includes one universal dynamic right angle pivot nub and two "L" dynamic pivot arms. It has permanently lubricated bronze bushings that act as high-strength pivot points and nylon thrust washers that protect the pivot arms. This assembly offers a high load capacity while ensuring a long life cycle. The hardware to connect the nub to the profile, the nub to the arms, and the arms to the profile are all included.

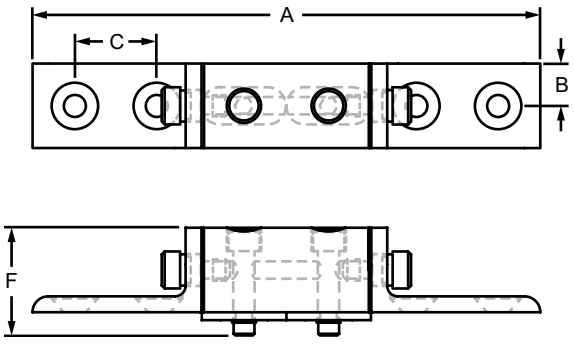

Part No.	Series	Nub (Qty.)	Arm (Qty.)	Color	A	B	C	D	E	F	Weight
4033	10	4027 (1)	4172 (2)	Clear	6.010"	.500"	1.000"	1.000"	1.000"	1.275"	.398 lb
4033-Black	10	4027 (1)	4172 (2)	Black	6.010"	.500"	1.000"	1.000"	1.000"	1.275"	.398 lb
4433	15	4427 (1)	4343 (2)	Clear	9.012"	.750"	1.500"	1.500"	1.500"	1.950"	1.201 lb
4433-Black	15	4427 (1)	4343 (2)	Black	9.012"	.750"	1.500"	1.500"	1.500"	1.950"	1.201 lb
25-4033	25	25-4027 (1)	25-4172 (2)	Clear	150.22mm	12.50mm	25.00mm	25.00mm	25.00mm	31.88mm	.1705 kg
25-4033-Black	25	25-4027 (1)	25-4172 (2)	Black	150.22mm	12.50mm	25.00mm	25.00mm	25.00mm	31.88mm	.1705 kg
40-4433	40	40-4427 (1)	40-4343 (2)	Clear	240.22mm	20.00mm	40.00mm	40.00mm	40.00mm	51.43mm	.5925 kg
40-4433-Black	40	40-4427 (1)	40-4343 (2)	Black	240.22mm	20.00mm	40.00mm	40.00mm	40.00mm	51.43mm	.5925 kg

Material Specifications

Material	Alloy*	Finish
Aluminum	6105-T5	Anodize

* Or comparable

Included Mounting Hardware

	Nub to Profile		Arms to Nub		Arms to Profile	
Series	Part No.	Qty.	Part No.	Qty.	Part No.	Qty.
10	3306	2	3501	1	3414	4
15	3613	2	3500	1	3412	4
25	75-3415	2	25-3501	1	75-3541	4
40	75-3479	2	40-3500	1	75-3508	4

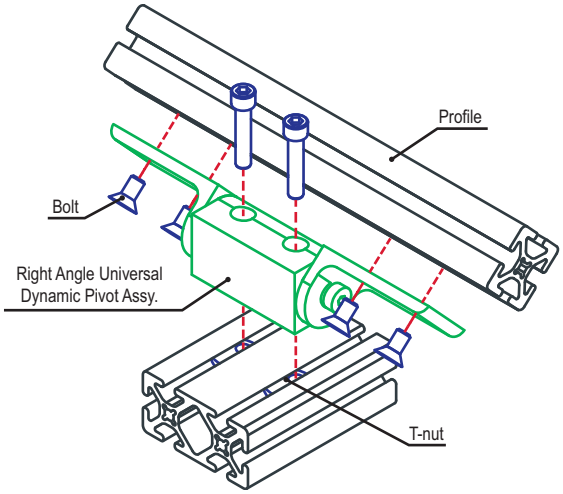

90 Degree Left Hand Pivot Bracket Plate

Part Description:

The 90 degree left hand pivot bracket plate is commonly used to add motion to certain elements of your project. The plate provides a full 90 degrees of axial motion and has a permanently lubricated bronze bushing that acts as high-strength pivot point. See below for the suggested hardware to mount the plate to a profile.

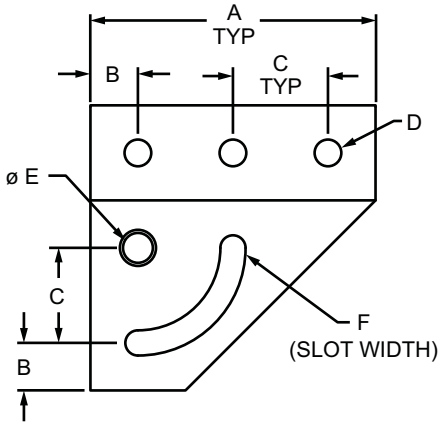

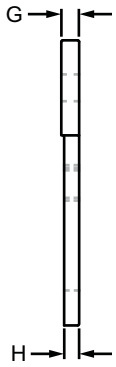

Part No.	Series	Color	A	B	C	D	E	F	G	H	Weight
4133	10	Clear	3.000"	.500"	1.000"	.281"	.312"	.265"	.188"	.158"	.100 lb
4133-Black	10	Black	3.000"	.500"	1.000"	.281"	.312"	.265"	.188"	.158"	.100 lb
4333	15	Clear	4.500"	.750"	1.500"	.328"	.375"	.328"	.250"	.220"	.335 lb
4333-Black	15	Black	4.500"	.750"	1.500"	.328"	.375"	.328"	.250"	.220"	.335 lb
25-4133	25	Clear	75.00mm	12.50mm	25.00mm	6.50mm	8.00mm	6.73mm	4.00mm	3.24mm	.0376 kg
25-4133-Black	25	Black	75.00mm	12.50mm	25.00mm	6.50mm	8.00mm	6.73mm	4.00mm	3.24mm	.0376kg
40-4333	40	Clear	120.00mm	20.00mm	40.00mm	8.33mm	10.00mm	8.33mm	6.00mm	5.19mm	.1550 kg
40-4333-Black	40	Black	120.00mm	20.00mm	40.00mm	8.33mm	10.00mm	8.33mm	6.00mm	5.19mm	.1550 kg

Material Specifications

Material	Alloy*	Finish
Aluminum	6105-T5	Anodize

* Or comparable

Suggested Hardware (Mount to T-Slot)

Part No.	Series	Qty.	Bolt	T-Nut
3321	10	3	1/4-20 x 1/2" FBHSCS	Economy
3320	15	3	5/16-18 x 5/8" FBHSCS	
75-3404	25	3	M6 x 10mm BHSCS	
75-3422	40	3	M8 x 16mm BHSCS	

90 Degree Right Hand Pivot Bracket Plate

Part Description:

The 90 degree right hand pivot bracket plate is commonly used to add motion to certain elements of your project. The plate provides a full 90 degrees of axial motion and has a permanently lubricated bronze bushing that acts as high-strength pivot point. See below for the suggested hardware to mount the plate to a profile.

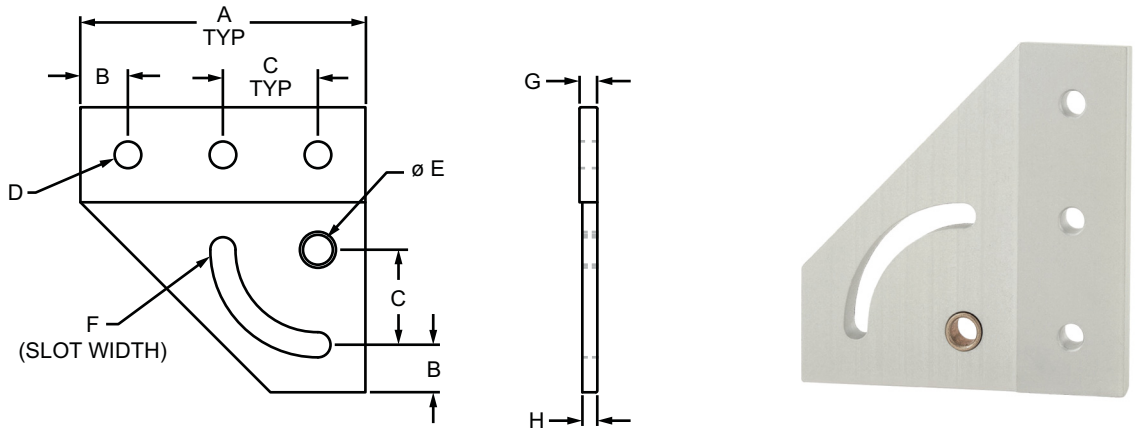

Part No.	Series	Color	A	B	C	D	E	F	G	H	Weight
4137	10	Clear	3.000"	.500"	1.000"	.281"	.312"	.265"	.188"	.158"	.102 lb
4137-Black	10	Black	3.000"	.500"	1.000"	.281"	.312"	.265"	.188"	.158"	.102 lb
4337	15	Clear	4.500"	.750"	1.500"	.328"	.375"	.328"	.250"	.220"	.334 lb
4337-Black	15	Black	4.500"	.750"	1.500"	.328"	.375"	.328"	.250"	.220"	.334 lb
25-4137	25	Clear	75.00mm	12.50mm	25.00mm	6.50mm	8.00mm	6.73mm	4.00mm	3.24mm	.0376 kg
25-4137-Black	25	Black	75.00mm	12.50mm	25.00mm	6.50mm	8.00mm	6.73mm	4.00mm	3.24mm	.0376 kg
40-4337	40	Clear	120.00mm	20.00mm	40.00mm	8.33mm	10.00mm	8.33mm	6.00mm	5.19mm	.1532 kg
40-4337-Black	40	Black	120.00mm	20.00mm	40.00mm	8.33mm	10.00mm	8.33mm	6.00mm	5.19mm	.1532 kg

Material Specifications

Material	Alloy*	Finish
Aluminum	6105-T5	Anodize

* Or comparable

Suggested Hardware (Mount to T-Slot)

Part No.	Series	Qty.	Bolt	T-Nut
3321	10	3	1/4-20 x 1/2" FBHSCS	Economy
3320	15	3	5/16-18 x 5/8" FBHSCS	
75-3404	25	3	M6 x 10mm BHSCS	
75-3422	40	3	M8 x 16mm BHSCS	

90 Degree Left Hand Pivot Bracket Assembly with "L" Handle

Part Description:

The 90 degree left hand pivot bracket assembly with "L" handle is commonly used to add motion to certain elements of your project. It is comprised of one 90 degree left hand pivot bracket, one "L" handle, and one 0 degree structural pivot nub. The shoulder bolt and nylon thrust washers are also included. The bracket has a permanently lubricated bronze bushing that acts as high-strength pivot point. It offers a high load capacity while ensuring a long life cycle.

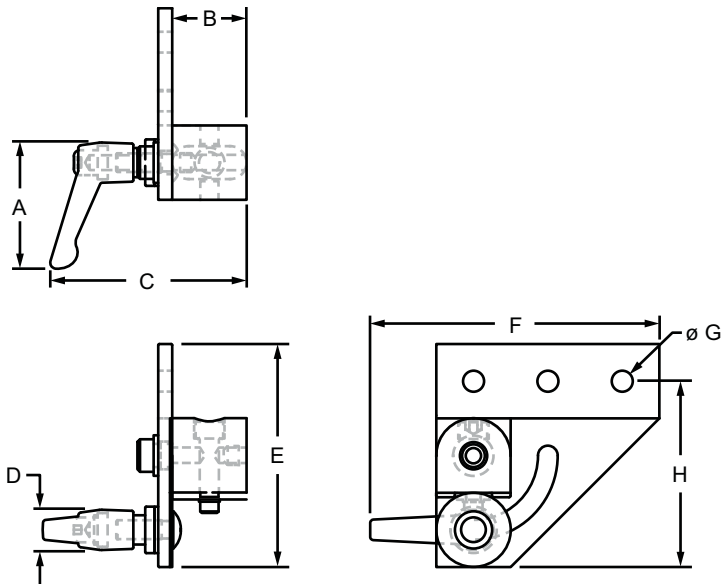

Part No.	Series	Plate (Qty.)	Nub (Qty.)	Handle (Qty.)	Color	A	B	C	D	E	F	G	H	Weight
4139	10	4133 (1)	4187 (1)	2796 (1)	Clear	2.041"	1.000"	2.754"	.541"	3.000"	4.270"	.281"	2.500"	.274 lb
4139-Black	10	4133 (1)	4187 (1)	2796 (1)	Black	2.041"	1.000"	2.754"	.541"	3.000"	4.270"	.281"	2.500"	.274 lb
4339	15	4333 (1)	4387 (1)	2797 (1)	Clear	3.505"	1.500"	4.015"	.871"	4.500"	6.820"	.328"	3.750"	1.029 lb
4339-Black	15	4333 (1)	4387 (1)	2797 (1)	Black	3.505"	1.500"	4.015"	.871"	4.500"	6.820"	.328"	3.750"	1.029 lb
25-4139	25	25-4133 (1)	25-4187 (1)	25-2796 (1)	Clear	51.84mm	25.00mm	69.24mm	13.77mm	75.00mm	107.46mm	6.50mm	62.50mm	.1144 kg
25-4139-Black	25	25-4133 (1)	25-4187 (1)	25-2796 (1)	Black	51.84mm	25.00mm	69.24mm	13.77mm	75.00mm	107.46mm	6.50mm	62.50mm	.1144 kg
40-4339	40	40-4333 (1)	40-4387 (1)	40-2797 (1)	Clear	89.03mm	40.00mm	103.53mm	22.12mm	120.00mm	177.98mm	8.48mm	100.00mm	.4944 kg
40-4339-Black	40	40-4333 (1)	40-4387 (1)	40-2797 (1)	Black	89.03mm	40.00mm	103.53mm	22.12mm	120.00mm	177.98mm	8.48mm	100.00mm	.4944 kg

Material Specifications

Material	Alloy*	Finish
Aluminum	6105-T5	Anodize

* Or comparable

Suggested Hardware (Mount to T-Slot)

Part No.	Series	Qty.	Bolt	T-Nut
3321	10	3	1/4-20 x 1/2" FBHSCS	Economy
3320	15	3	5/16-18 x 5/8" FBHSCS	
75-3404	25	3	M6 x 10mm BHSCS	
75-3422	40	3	M8 x 16mm BHSCS	

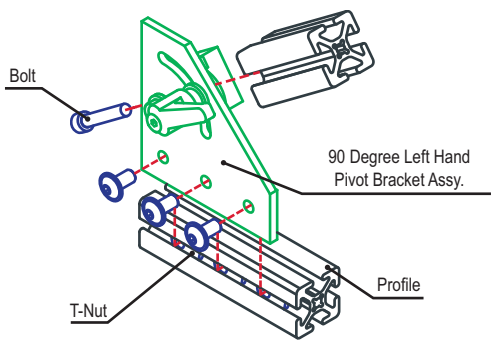

90 Degree Left Hand Pivot Bracket Assembly with "T" Handle

Part Description:

The 90 degree left hand pivot bracket assembly with "T" handle is commonly used to add motion to certain elements of your project. It is comprised of one 90 degree left hand pivot bracket, one "T" handle, and one 0 degree structural pivot nub. The shoulder bolt and nylon thrust washers are also included. The bracket has a permanently lubricated bronze bushing that acts as high-strength pivot point. It offers a high load capacity while ensuring a long life cycle.

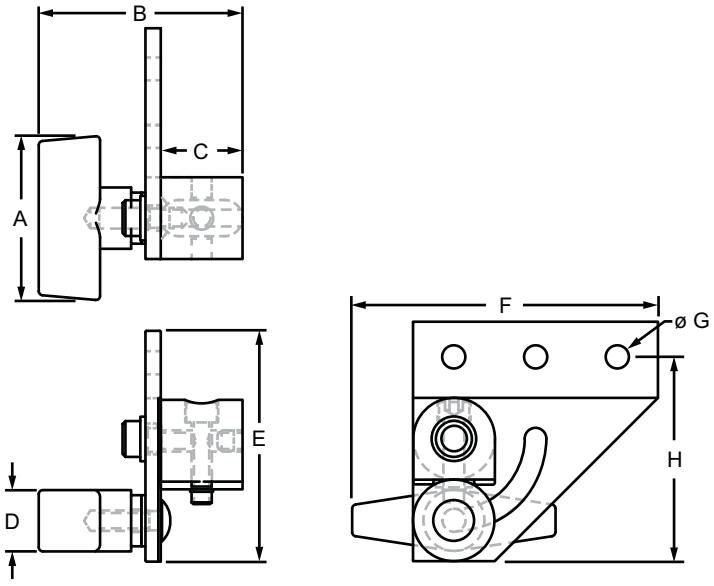

Part No.	Series	Plate (Qty.)	Nub (Qty.)	Handle (Qty.)	Color	A	B	C	D	E	F	G	H	Weight
4142	10	4133 (1)	4187 (1)	2798 (1)	Clear	2.490"	2.493"	1.000"	.750"	3.000"	3.745"	.281"	2.500"	.281 lb
4142-Black	10	4133 (1)	4187 (1)	2798 (1)	Black	2.490"	2.493"	1.000"	.750"	3.000"	3.745"	.281"	2.500"	.281 lb
4342	15	4333 (1)	4387 (1)	2799 (1)	Clear	2.490"	2.977"	1.500"	.750"	4.500"	5.245"	.328"	3.750"	.784 lb
4342-Black	15	4333 (1)	4387 (1)	2799 (1)	Black	2.490"	2.977"	1.500"	.750"	4.500"	5.245"	.328"	3.750"	.784 lb

Material Specifications

Material	Alloy*	Finish
Aluminum	6105-T5	Anodize

* Or comparable

Suggested Hardware (Mount to T-Slot)

Part No.	Series	Qty.	Bolt	T-Nut
3321	10	3	1/4-20 x 1/2" FBHSCS	Economy
3320	15	3	5/16-18 x 5/8" FBHSCS	

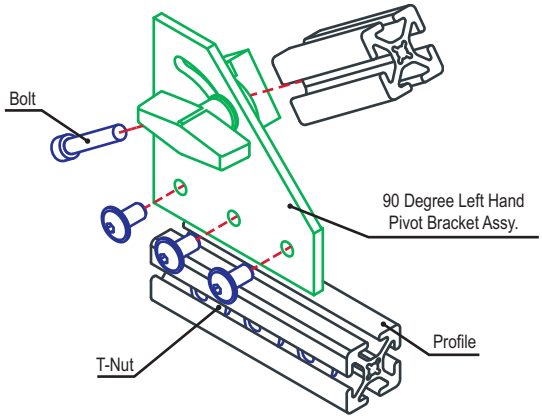

90 Degree Right Hand Pivot Bracket Assembly with "L" Handle

Part Description:

The 90 degree right hand pivot bracket assembly with "L" handle is commonly used to add motion to certain elements of your project. It is comprised of one 90 degree right hand pivot bracket, one "L" handle, and one 0 degree structural pivot nub. The shoulder bolt and nylon thrust washers are also included. The bracket has a permanently lubricated bronze bushing that acts as high-strength pivot point. It offers a high load capacity while ensuring a long life cycle.

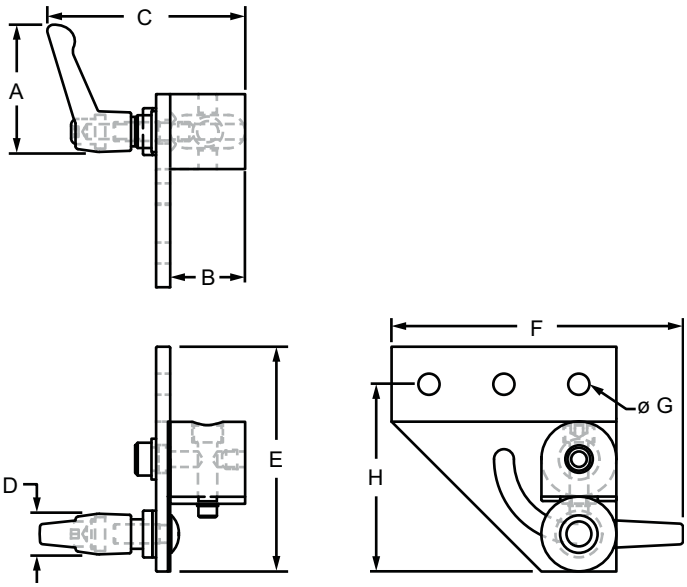

Part No.	Series	Plate (Qty.)	Nub (Qty.)	Handle (Qty.)	Color	A	B	C	D	E	F	G	H	Weight
4148	10	4137 (1)	4187 (1)	2796 (1)	Clear	2.041"	1.000"	2.754"	.541"	3.000"	4.270"	.281"	2.500"	.277 lb
4148-Black	10	4137 (1)	4187 (1)	2796 (1)	Black	2.041"	1.000"	2.754"	.541"	3.000"	4.270"	.281"	2.500"	.277 lb
4348	15	4337 (1)	4387 (1)	2797 (1)	Clear	3.505"	1.500"	4.015"	.871"	4.500"	6.820"	.328"	3.750"	1.018 lb
4348-Black	15	4337 (1)	4387 (1)	2797 (1)	Black	3.505"	1.500"	4.015"	.871"	4.500"	6.820"	.328"	3.750"	1.018 lb
25-4148	25	25-4137 (1)	25-4187 (1)	25-2796 (1)	Clear	51.84mm	25.00mm	69.24mm	13.77mm	75.00mm	107.46mm	6.50mm	62.50mm	.1146 kg
25-4148-Black	25	25-4137 (1)	25-4187 (1)	25-2796 (1)	Black	51.84mm	25.00mm	69.24mm	13.77mm	75.00mm	107.46mm	6.50mm	62.50mm	.1146 kg
40-4348	40	40-4337 (1)	40-4387 (1)	40-2797 (1)	Clear	89.03mm	40.00mm	103.53mm	22.12mm	120.00mm	177.98mm	8.48mm	100.00mm	.4927 kg
40-4348-Black	40	40-4337 (1)	40-4387 (1)	40-2797 (1)	Black	89.03mm	40.00mm	103.53mm	22.12mm	120.00mm	177.98mm	8.48mm	100.00mm	.4927 kg

Material Specifications

Material	Alloy*	Finish
Aluminum	6105-T5	Anodize

* Or comparable

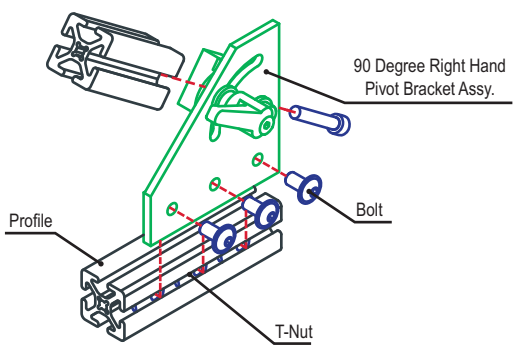

Suggested Hardware (Mount to T-Slot)

Part No.	Series	Qty.	Bolt	T-Nut
3321	10	3	1/4-20 x 1/2" FBHSCS	Economy
3320	15	3	5/16-18 x 5/8" FBHSCS	
75-3404	25	3	M6 x 10mm BHSCS	
75-3422	40	3	M8 x 16mm BHSCS	

90 Degree Right Hand Pivot Bracket Assembly with "T" Handle

Part Description:

The 90 degree right hand pivot bracket assembly with "T" handle is commonly used to add motion to certain elements of your project. It is comprised of one 90 degree right hand pivot bracket, one "T" handle, and one 0 degree structural pivot nub. The shoulder bolt and nylon thrust washers are also included. The bracket has a permanently lubricated bronze bushing that acts as high-strength pivot point. It offers a high load capacity while ensuring a long life cycle.

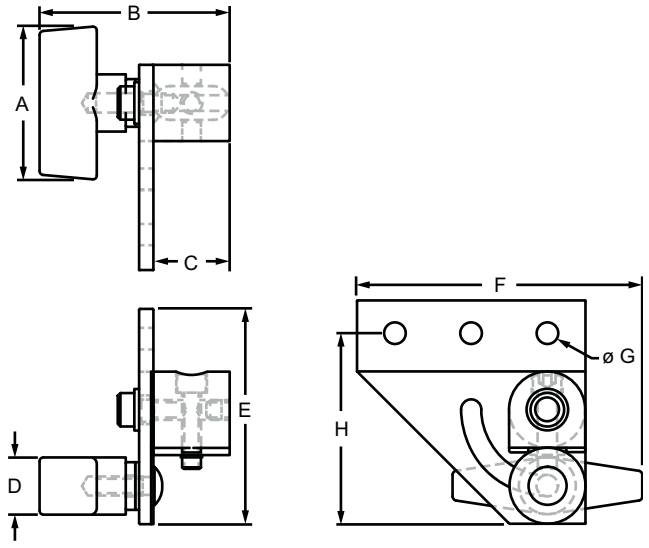

Part No.	Series	Plate (Qty.)	Nub (Qty.)	Handle (Qty.)	Color	A	B	C	D	E	F	G	H	Weight
4147	10	4137 (1)	4187 (1)	2798 (1)	Clear	2.490"	2.493"	1.000"	.750"	3.000"	3.745"	.281"	2.500"	.287 lb
4147-Black	10	4137 (1)	4187 (1)	2798 (1)	Black	2.490"	2.493"	1.000"	.750"	3.000"	3.745"	.281"	2.500"	.287 lb
4347	15	4337 (1)	4387 (1)	2799 (1)	Clear	2.490"	2.977"	1.500"	.750"	4.500"	5.245"	.328"	3.750"	.774 lb
4347-Black	15	4337 (1)	4387 (1)	2799 (1)	Black	2.490"	2.977"	1.500"	.750"	4.500"	5.245"	.328"	3.750"	.774 lb

Material Specifications

Material	Alloy*	Finish
Aluminum	6105-T5	Anodize

* Or comparable

Suggested Hardware (Mount to T-Slot)

Part No.	Series	Qty.	Bolt	T-Nut
3321	10	3	1/4-20 x 1/2" FBHSCS	Economy
3320	15	3	5/16-18 x 5/8" FBHSCS	

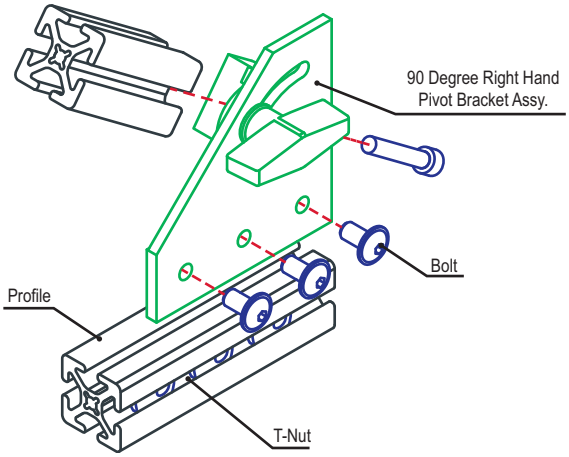

90 Degree Double Pivot Bracket Assembly with "L" Handles

Part Description:

The 90 degree double pivot bracket assembly with "L" handles is commonly used to add motion to certain elements of your project. It is comprised of one 90 degree left hand pivot bracket, one 90 degree right hand pivot bracket, two "L" handles, and one 0 degree structural pivot nub. The shoulder bolt and nylon thrust washers are also included. The brackets have permanently lubricated bronze bushings that act as high-strength pivot points. It offers a high load capacity while ensuring a long life cycle.

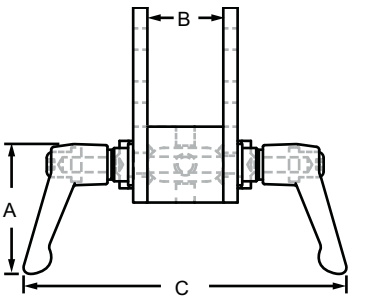

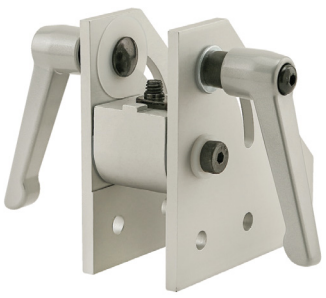

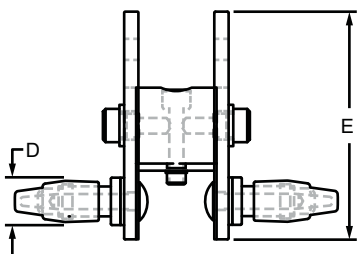

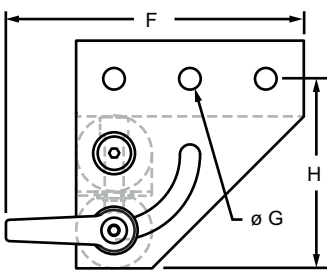

Part No.	Series	Plate (Qty.)	Nub (Qty.)	Handle (Qty.)	Color	A	B	C	D	E	F	G	H	Weight
4116	10	4133 (1) 4137 (1)	4187 (1)	2796 (2)	Clear	2.041"	1.000"	4.508"	.541"	3.000"	4.270"	.281"	2.500"	.452 lb
4116-Black	10	4133 (1) 4137 (1)	4187 (1)	2796 (2)	Black	2.041"	1.000"	4.508"	.541"	3.000"	4.270"	.281"	2.500"	.452 lb
4317	15	4333 (1) 4337 (1)	4387 (1)	2797 (2)	Clear	3.505"	1.500"	6.530"	.871"	4.500"	6.820"	.328"	3.750"	1.721 lb
4317-Black	15	4333 (1) 4337 (1)	4387 (1)	2797 (2)	Black	3.505"	1.500"	6.530"	.871"	4.500"	6.820"	.328"	3.750"	1.721 lb
25-4116	25	25-4133 (1) 25-4137 (1)	25-4187 (1)	25-2796 (2)	Clear	51.84mm	25.00mm	113.48mm	13.77mm	75.00mm	107.46mm	6.50mm	62.50mm	.1845 kg
25-4116-Black	25	25-4133 (1) 25-4137 (1)	25-4187 (1)	25-2796 (2)	Black	51.84mm	25.00mm	113.48mm	13.77mm	75.00mm	107.46mm	6.50mm	62.50mm	.1845 kg
40-4317	40	40-4333 (1) 40-4337 (1)	40-4387 (1)	40-2797 (2)	Clear	89.03mm	40.00mm	167.06mm	22.12mm	120.00mm	177.98mm	8.48mm	100.00mm	.8179 kg
40-4317-Black	40	40-4333 (1) 40-4337 (1)	40-4387 (1)	40-2797 (2)	Black	89.03mm	40.00mm	167.06mm	22.12mm	120.00mm	177.98mm	8.48mm	100.00mm	.8179 kg

Material Specifications

Material	Alloy*	Finish
Aluminum	6105-T5	Anodize

* Or comparable

Suggested Hardware (Mount to T-Slot)

Part No.	Series	Qty.	Bolt	T-Nut
3321	10	6	1/4-20 x 1/2" FBHSCS	Economy
3320	15	6	5/16-18 x 5/8" FBHSCS	
75-3404	25	6	M6 x 10mm BHSCS	
75-3422	40	6	M8 x 16mm BHSCS	

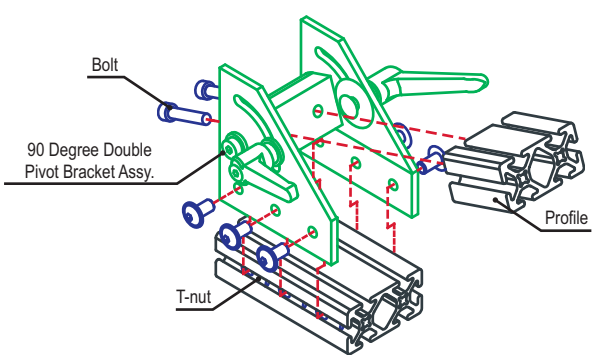

90 Degree Double Pivot Bracket Assembly with “T” Handles

Part Description:

The 90 degree double pivot bracket assembly with “T” handles is commonly used to add motion to certain elements of your project. It is comprised of one 90 degree left hand pivot bracket, one 90 degree right hand pivot bracket, two “T” handles, and one 0 degree structural pivot nub. The shoulder bolt and nylon thrust washers are also included. The brackets have permanently lubricated bronze bushings that act as high-strength pivot points. It offers a high load capacity while ensuring a long life cycle.

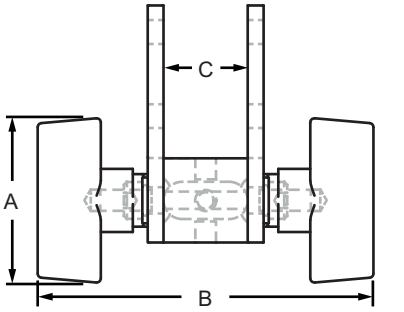

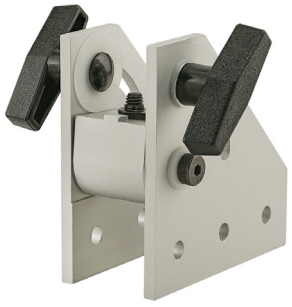

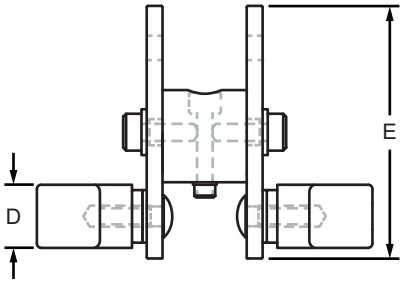

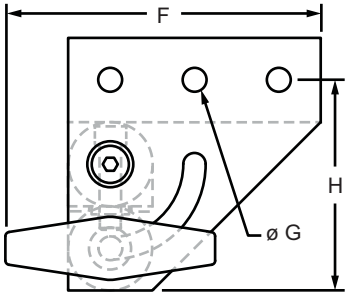

Part No.	Series	Plate (Qty.)	Nub (Qty.)	Handle (Qty.)	Color	A	B	C	D	E	F	G	H	Weight
4130	10	4133 (1) 4137 (1)	4187 (1)	2798 (2)	Clear	2.490”	3.986”	1.000”	.750”	3.000”	3.745”	.281”	2.500”	.464 lb
4130-Black	10	4133 (1) 4137 (1)	4187 (1)	2798 (2)	Black	2.490”	3.986”	1.000”	.750”	3.000”	3.745”	.281”	2.500”	.464 lb
4319	15	4333 (1) 4337 (1)	4387 (1)	2799 (2)	Clear	2.490”	4.454”	1.500”	.750”	4.500”	5.245”	.328”	3.750”	.954 lb
4319-Black	15	4333 (1) 4337 (1)	4387 (1)	2799 (2)	Black	2.490”	4.454”	1.500”	.750”	4.500”	5.245”	.328”	3.750”	.954 lb

Material Specifications

Material	Alloy*	Finish
Aluminum	6105-T5	Anodize

* Or comparable

Suggested Hardware (Mount to T-Slot)

Part No.	Series	Qty.	Bolt	T-Nut
3321	10	6	1/4-20 x 1/2” FBHSCS	Economy
3320	15	6	5/16-18 x 5/8” FBHSCS	

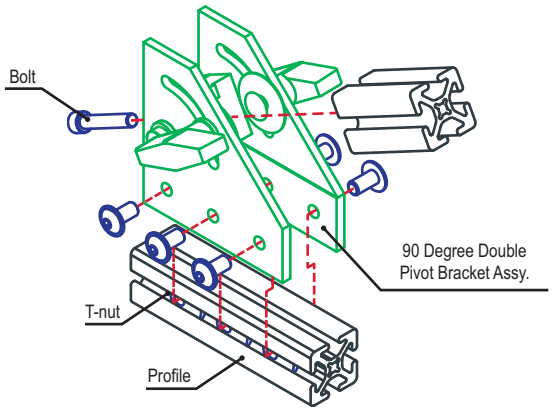

90 Degree Wide Double Pivot Bracket Assembly with "L" Handles

Part Description:

The 90 degree wide double pivot bracket assembly with "L" handles is commonly used to add motion to certain elements of your project. It is comprised of one 90 degree left hand pivot bracket, one 90 degree right hand pivot bracket, two "L" handles, and one universal structural pivot nub. The shoulder bolt and nylon thrust washers are also included. The brackets have permanently lubricated bronze bushings that act as high-strength pivot points. It offers a high load capacity while ensuring a long life cycle.

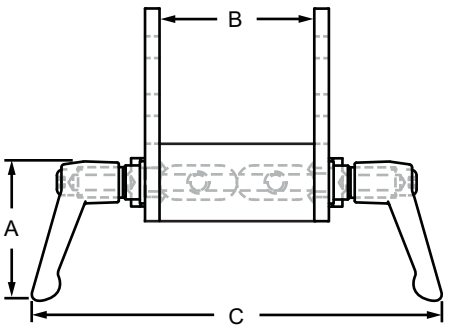

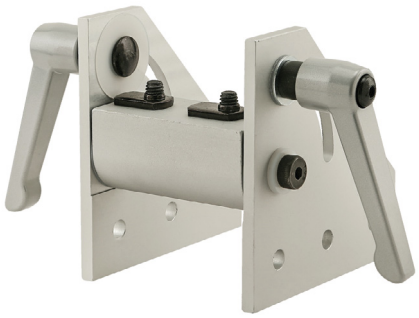

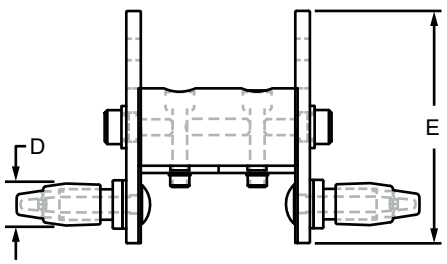

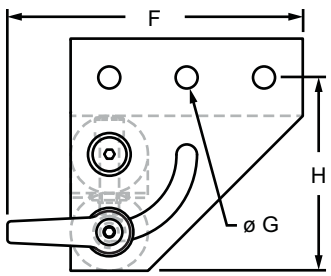

Part No.	Series	Plate (Qty.)	Nub (Qty.)	Handle (Qty.)	Color	A	B	C	D	E	F	G	H	Weight
4124	10	4133 (1) 4137 (1)	4186 (1)	2796 (2)	Clear	2.041"	2.000"	5.508"	.541"	3.000"	4.270"	.281"	2.500"	.550 lb
4124-Black	10	4133 (1) 4137 (1)	4186 (1)	2796 (2)	Black	2.041"	2.000"	5.508"	.541"	3.000"	4.270"	.281"	2.500"	.550 lb
4318	15	4333 (1) 4337 (1)	4386 (1)	2797 (2)	Clear	3.505"	3.000"	8.030"	.871"	4.500"	6.820"	.328"	3.750"	2.053 lb
4318-Black	15	4333 (1) 4337 (1)	4386 (1)	2797 (2)	Black	3.505"	3.000"	8.030"	.871"	4.500"	6.820"	.328"	3.750"	2.053 lb
25-4124	25	25-4133 (1) 25-4137 (1)	25-4186 (1)	25-2796 (2)	Clear	51.84mm	50.00mm	138.48mm	13.77mm	75.00mm	107.46mm	6.50mm	62.50mm	.2287 kg
25-4124-Black	25	25-4133 (1) 25-4137 (1)	25-4186 (1)	25-2796 (2)	Black	51.84mm	50.00mm	138.48mm	13.77mm	75.00mm	107.46mm	6.50mm	62.50mm	.2287 kg
40-4318	40	40-4333 (1) 40-4337 (1)	40-4386 (1)	40-2797 (2)	Clear	89.03mm	80.00mm	207.06mm	22.12mm	120.00mm	177.98mm	8.48mm	100.00mm	.9980 kg
40-4318-Black	40	40-4333 (1) 40-4337 (1)	40-4386 (1)	40-2797 (2)	Black	89.03mm	80.00mm	207.06mm	22.12mm	120.00mm	177.98mm	8.48mm	100.00mm	.9980kg

Material Specifications

Material	Alloy*	Finish
Aluminum	6105-T5	Anodize

* Or comparable

Suggested Hardware (Mount to T-Slot)

Part No.	Series	Qty.	Bolt	T-Nut
3321	10	6	1/4-20 x 1/2" FBHSCS	Economy
3320	15	6	5/16-18 x 5/8" FBHSCS	
75-3404	25	6	M6 x 10mm BHSCS	
75-3422	40	6	M8 x 16mm BHSCS	

90 Degree Wide Double Pivot Bracket Assembly with "T" Handles

Part Description:

The 90 degree wide double pivot bracket assembly with "T" handles is commonly used to add motion to certain elements of your project. It is comprised of one 90 degree left hand pivot bracket, one 90 degree right hand pivot bracket, two "T" handles, and one universal structural pivot nub. The shoulder bolt and nylon thrust washers are also included. The brackets have permanently lubricated bronze bushings that act as high-strength pivot points. It offers a high load capacity while ensuring a long life cycle.

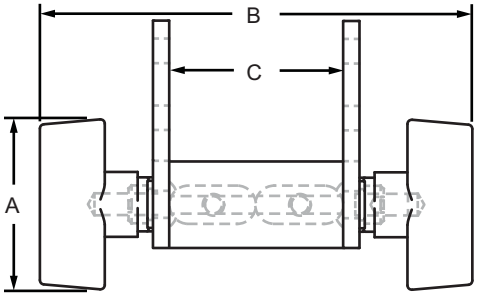

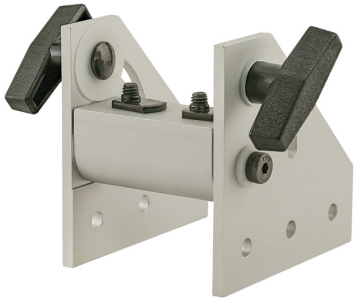

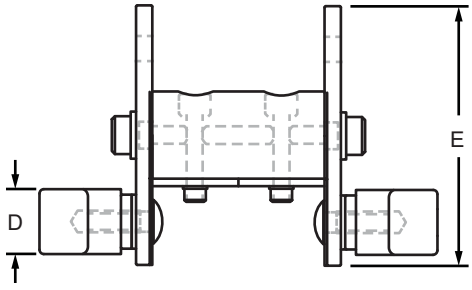

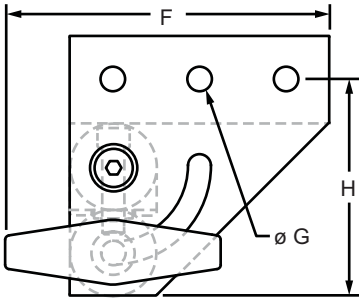

Part No.	Series	Plate (Qty.)	Nub (Qty.)	Handle (Qty.)	Color	A	B	C	D	E	F	G	H	Weight
4131	10	4133 (1) 4137 (1)	4186 (1)	2798 (2)	Clear	2.490"	4.986"	2.000"	.750"	3.000"	3.745"	.257"	2.500"	.254 lb
4131-Black	10	4133 (1) 4137 (1)	4186 (1)	2798 (2)	Black	2.490"	4.986"	2.000"	.750"	3.000"	3.745"	.257"	2.500"	.254 lb
4324	15	4333 (1) 4337 (1)	4386 (1)	2799 (2)	Clear	2.490"	5.954"	3.000"	.750"	4.500"	5.245"	.328"	3.750"	1.544 lb
4324-Black	15	4333 (1) 4337 (1)	4386 (1)	2799 (2)	Black	2.490"	5.954"	3.000"	.750"	4.500"	5.245"	.328"	3.750"	1.544 lb

Material Specifications

Material	Alloy*	Finish
Aluminum	6105-T5	Anodize

* Or comparable

Suggested Hardware (Mount to T-Slot)

Part No.	Series	Qty.	Bolt	T-Nut
3321	10	6	1/4-20 x 1/2" FBHSCS	Economy
3320	15	6	5/16-18 x 5/8" FBHSCS	

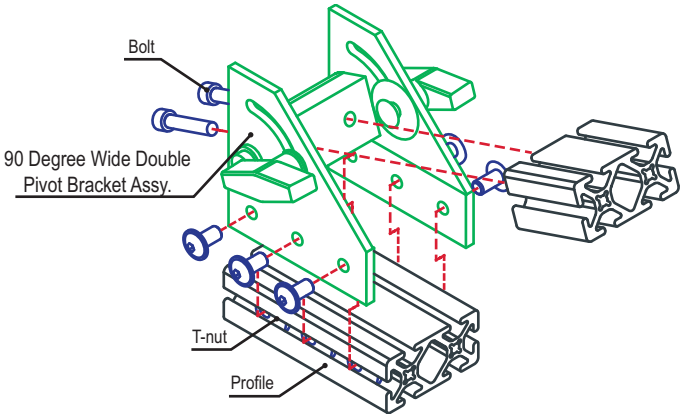

Part Description:

The 180 degree pivot bracket plate is commonly used to add motion to certain elements of your project. The plate provides a full 180 degrees of axial motion and has a permanently lubricated bronze bushing that acts as high-strength pivot point. See below for the suggested hardware to mount the plate to a profile.

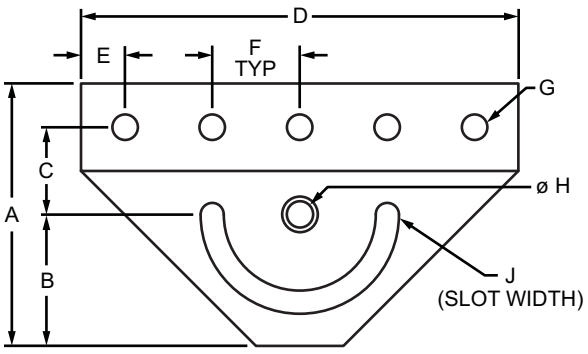

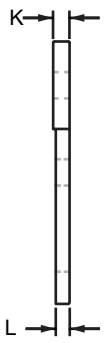

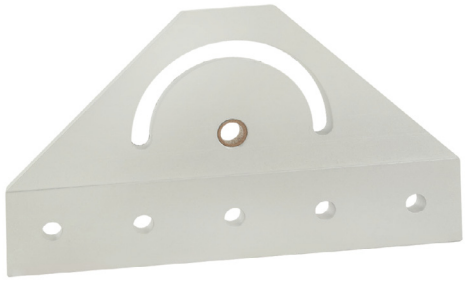

Part No.	Series	Color	A	B	C	D	E	F	G	H	J	K	L	Weight
4024	10	Clear	3.000"	1.500"	1.000"	5.000"	.500"	1.000"	.281"	.312"	.265"	.188"	.158"	.156 lb
4024-Black	10	Black	3.000"	1.500"	1.000"	5.000"	.500"	1.000"	.281"	.312"	.265"	.188"	.158"	.156 lb
4424	15	Clear	4.500"	2.250"	1.500"	7.500"	.750"	1.500"	.328"	.375"	.328"	.250"	.220"	.510 lb
4424-Black	15	Black	4.500"	2.250"	1.500"	7.500"	.750"	1.500"	.328"	.375"	.328"	.250"	.220"	.510 lb
25-4024	25	Clear	75.00mm	37.50mm	25.00mm	125.00mm	12.50mm	25.00mm	6.50mm	8.00mm	6.73mm	4.00mm	3.24mm	.0600 kg
25-4024-Black	25	Black	75.00mm	37.50mm	25.00mm	125.00mm	12.50mm	25.00mm	6.50mm	8.00mm	6.73mm	4.00mm	3.24mm	.0600 kg
40-4424	40	Clear	120.00mm	60.00mm	40.00mm	200.00mm	20.00mm	40.00mm	8.33mm	10.00mm	8.33mm	6.00mm	5.19mm	.2429 kg
40-4424-Black	40	Black	120.00mm	60.00mm	40.00mm	200.00mm	20.00mm	40.00mm	8.33mm	10.00mm	8.33mm	6.00mm	5.19mm	.2429 kg

Material Specifications

Material	Alloy*	Finish
Aluminum	6105-T5	Anodize

* Or comparable

Suggested Hardware (Mount to T-Slot)

Part No.	Series	Qty.	Bolt	T-Nut
3321	10	5	1/4-20 x 1/2" FBHSCS	Economy
3320	15	5	5/16-18 x 5/8" FBHSCS	
75-3404	25	5	M6 x 10mm BHSCS	
75-3422	40	5	M8 x 16mm BHSCS	

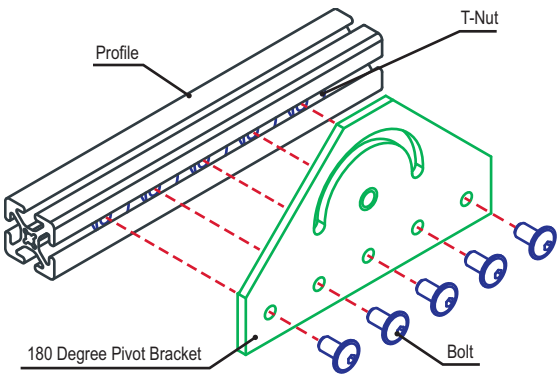

180 Degree Right Hand Pivot Bracket Assembly with "L" Handle

Part Description:

The 180 degree right hand pivot bracket assembly with "L" handle is commonly used to add motion to certain elements of your project. It is comprised of one 180 degree pivot bracket, one "L" handle, and one 0 degree structural pivot nub. The shoulder bolt and nylon thrust washers are also included. The bracket has a permanently lubricated bronze bushing that acts as high-strength pivot point. It offers a high load capacity while ensuring a long life cycle.

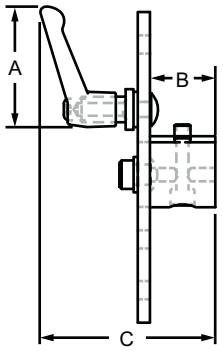

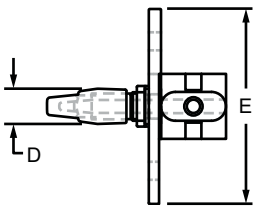

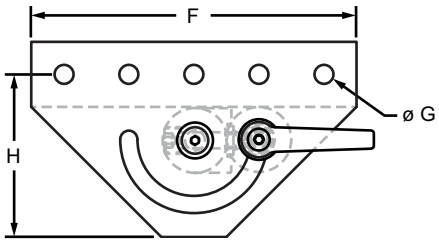

Part No.	Series	Plate (Qty.)	Nub (Qty.)	Handle (Qty.)	Color	A	B	C	D	E	F	G	H	Weight
4051	10	4024 (1)	4187 (1)	2796 (1)	Clear	2.041"	1.000"	2.755"	.541"	3.000"	5.000"	.281"	2.500"	.339 lb
4051-Black	10	4024 (1)	4187 (1)	2796 (1)	Black	2.041"	1.000"	2.755"	.541"	3.000"	5.000"	.281"	2.500"	.339 lb
4451	15	4424 (1)	4387 (1)	2797 (1)	Clear	3.505"	1.500"	4.015"	.871"	4.500"	7.500"	.328"	3.750"	1.199 lb
4451-Black	15	4424 (1)	4387 (1)	2797 (1)	Black	3.505"	1.500"	4.015"	.871"	4.500"	7.500"	.328"	3.750"	1.199 lb
25-4051	25	25-4024 (1)	25-4187 (1)	25-2796 (1)	Clear	51.84mm	25.00mm	69.24mm	13.77mm	75.00mm	125.00mm	6.50mm	62.50mm	.1375 kg
25-4051-Black	25	25-4024 (1)	25-4187 (1)	25-2796 (1)	Black	51.84mm	25.00mm	69.24mm	13.77mm	75.00mm	125.00mm	6.50mm	62.50mm	.1375 kg
40-4451	40	40-4424 (1)	40-4387 (1)	40-2797 (1)	Clear	89.03mm	40.00mm	103.53mm	22.12mm	120.00mm	200.00mm	8.48mm	100.00mm	.5824 kg
40-4451-Black	40	40-4424 (1)	40-4387 (1)	40-2797 (1)	Black	89.03mm	40.00mm	103.53mm	22.12mm	120.00mm	200.00mm	8.48mm	100.00mm	.5824 kg

Material Specifications

Material	Alloy*	Finish
Aluminum	6105-T5	Anodize

* Or comparable

Suggested Hardware (Mount to T-Slot)

Part No.	Series	Qty.	Bolt	T-Nut
3321	10	5	1/4-20 x 1/2" FBHSCS	Economy
3320	15	5	5/16-18 x 5/8" FBHSCS	
75-3404	25	5	M6 x 10mm BHSCS	
75-3422	40	5	M8 x 16mm BHSCS	

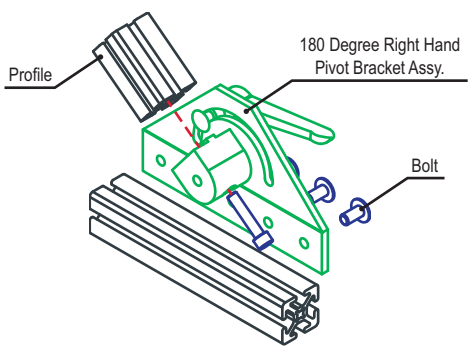

180 Degree Double Pivot Bracket Assembly with "L" Handles

Part Description:

The 180 degree double pivot bracket assembly with "L" handles is commonly used to add motion to certain elements of your project. It is comprised of two 180 degree pivot brackets, two "L" handles, and one 0 degree structural pivot nub. The shoulder bolt and nylon thrust washers are also included. The brackets have permanently lubricated bronze bushings that act as high-strength pivot points. It offers a high load capacity while ensuring a long life cycle.

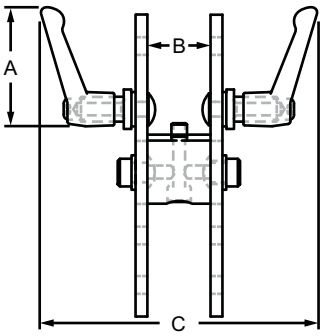

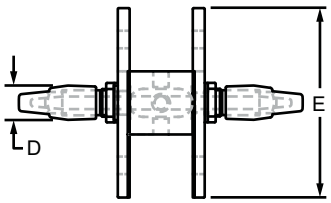

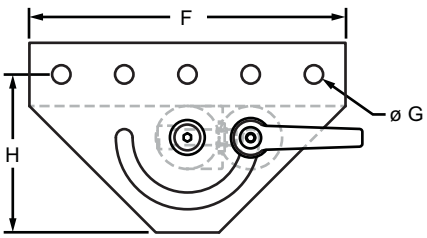

Part No.	Series	Plate (Qty.)	Nub (Qty.)	Handle (Qty.)	Color	A	B	C	D	E	F	G	H	Weight
4053	10	4024 (2)	4187 (1)	2796 (2)	Clear	2.041"	1.000"	4.510"	.541"	3.000"	5.000"	.281"	2.500"	.504 lb
4053-Black	10	4024 (2)	4187 (1)	2796 (2)	Black	2.041"	1.000"	4.510"	.541"	3.000"	5.000"	.281"	2.500"	.504 lb
4453	15	4424 (2)	4387 (1)	2797 (2)	Clear	3.505"	1.500"	6.530"	.871"	4.500"	7.500"	.328"	3.750"	2.074 lb
4453-Black	15	4424 (2)	4387 (1)	2797 (2)	Black	3.505"	1.500"	6.530"	.871"	4.500"	7.500"	.328"	3.750"	2.074 lb
25-4053	25	25-4024 (2)	25-4187 (1)	25-2796 (2)	Clear	51.84mm	25.00mm	113.48mm	13.77mm	75.00mm	125.00mm	6.50mm	62.50mm	.2304 kg
25-4053-Black	25	25-4024 (2)	25-4187 (1)	25-2796 (2)	Black	51.84mm	25.00mm	113.48mm	13.77mm	75.00mm	125.00mm	6.50mm	62.50mm	.2304 kg
40-4453	40	40-4424 (2)	40-4387 (1)	40-2797 (2)	Clear	89.03mm	40.00mm	167.06mm	22.12mm	120.00mm	200.00mm	8.48mm	100.00mm	.9970 kg
40-4453-Black	40	40-4424 (2)	40-4387 (1)	40-2797 (2)	Black	89.03mm	40.00mm	167.06mm	22.12mm	120.00mm	200.00mm	8.48mm	100.00mm	.9970 kg

Material Specifications

Material	Alloy*	Finish
Aluminum	6105-T5	Anodize

* Or comparable

Suggested Hardware (Mount to T-Slot)

Part No.	Series	Qty.	Bolt	T-Nut
3321	10	10	1/4-20 x 1/2" FBHSCS	Economy
3320	15	10	5/16-18 x 5/8" FBHSCS	
75-3404	25	10	M6 x 10mm BHSCS	
75-3422	40	10	M8 x 16mm BHSCS	

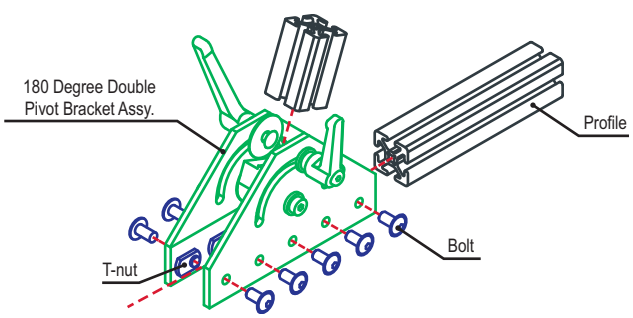

180 Degree Wide Double Pivot Bracket Assembly with "L" Handles

Part Description:

The 180 degree wide double pivot bracket assembly with "L" handles is commonly used to add motion to certain elements of your project. It is comprised of two 180 degree pivot brackets, two "L" handles, and one universal structural pivot nub. The shoulder bolt and nylon thrust washers are also included. The brackets have permanently lubricated bronze bushings that act as high-strength pivot points. It offers a high load capacity while ensuring a long life cycle.

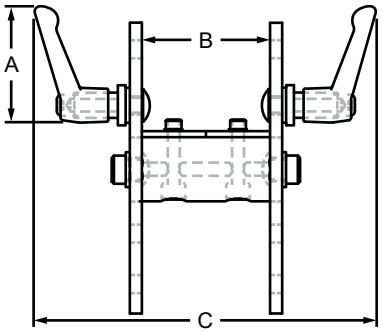

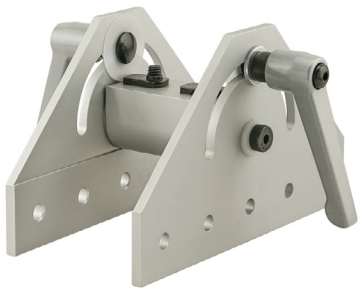

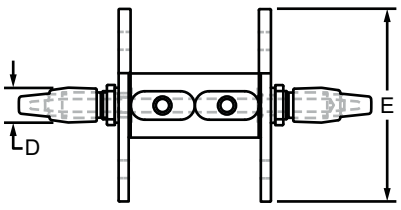

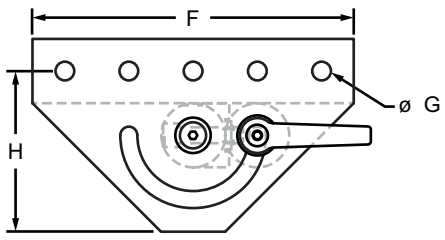

Part No.	Series	Plate (Qty.)	Nub (Qty.)	Handle (Qty.)	Color	A	B	C	D	E	F	G	H	Weight
4055	10	4024 (2)	4186 (1)	2796 (2)	Clear	2.041"	2.000"	5.510"	.541"	3.000"	5.000"	.281"	2.500"	.663 lb
4055-Black	10	4024 (2)	4186 (1)	2796 (2)	Black	2.041"	2.000"	5.510"	.541"	3.000"	5.000"	.281"	2.500"	.663 lb
4455	15	4424 (2)	4386 (1)	2797 (2)	Clear	3.505"	3.000"	8.030"	.871"	4.500"	7.500"	.328"	3.750"	2.396 lb
4455-Black	15	4424 (2)	4386 (1)	2797 (2)	Black	3.505"	3.000"	8.030"	.871"	4.500"	7.500"	.328"	3.750"	2.396 lb
25-4055	25	25-4024 (2)	25-4186 (1)	25-2796 (2)	Clear	51.84mm	50.00mm	138.48mm	13.77mm	75.00mm	125.00mm	6.50mm	62.50mm	.2744 kg
25-4055-Black	25	25-4024 (2)	25-4186 (1)	25-2796 (2)	Black	51.84mm	50.00mm	138.48mm	13.77mm	75.00mm	125.00mm	6.50mm	62.50mm	.2744 kg
40-4455	40	40-4424 (2)	40-4386 (1)	40-2797 (2)	Clear	89.03mm	80.00mm	207.06mm	22.12mm	120.00mm	200.00mm	8.48mm	100.00mm	1.1660 kg
40-4455-Black	40	40-4424 (2)	40-4386 (1)	40-2797 (2)	Black	89.03mm	80.00mm	207.06mm	22.12mm	120.00mm	200.00mm	8.48mm	100.00mm	1.1660 kg

Material Specifications

Material	Alloy*	Finish
Aluminum	6105-T5	Anodize

* Or comparable

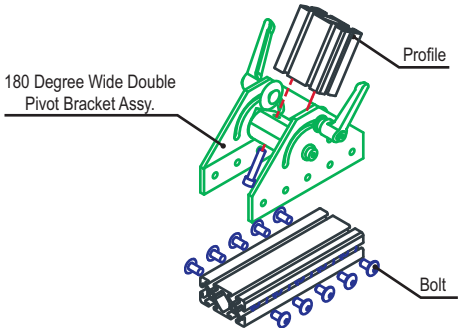

Suggested Hardware (Mount to T-Slot)

Part No.	Series	Qty.	Bolt	T-Nut
3321	10	10	1/4-20 x 1/2" FBHSCS	Economy
3320	15	10	5/16-18 x 5/8" FBHSCS	
75-3404	25	10	M6 x 10mm BHSCS	
75-3422	40	10	M8 x 16mm BHSCS	

Part Description:

The "L" handle kit adds an adjustable stop to a dynamic pivot by securing it into a semi-permanent position and adds a grip to aid with adjustments. All mounting hardware is included.

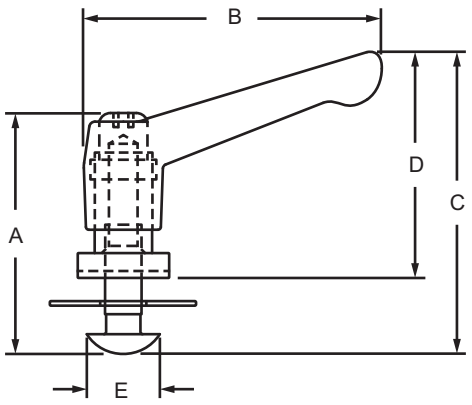

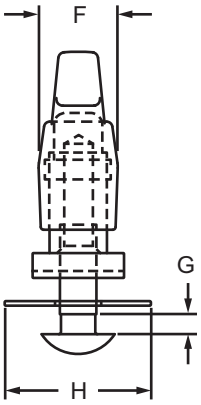

Part No.	Series	Material	Process	Finish	Color	A	B	C	D	E	F	G	H	Weight
2796	10	Nylon 66	Injection Mold	Matte	Black	1.650"	2.041"	2.070"	1.550"	.500"	.540"	.138"	1.000"	.069 lbs
2797	15	Zinc	Die Cast	Gloss	Gray	2.130"	3.505"	2.881"	2.265"	.704"	.871"	.140"	1.495"	.368 lbs
25-2796	25	Nylon 66	Injection Mold	Matte	Black	41.91mm	51.84mm	52.57mm	39.37mm	12.70mm	13.74mm	3.51mm	25.40mm	.0396 kg
40-2797	40	Zinc	Die Cast	Gloss	Gray	54.10mm	89.05mm	73.17mm	57.53mm	17.88mm	22.12mm	3.56mm	37.97mm	.1718 kg

"T" Handle Kit - Dynamic Pivot

Part Description:

The "T" handle kit adds an adjustable stop to a dynamic pivot by securing it into a semi-permanent position and adds a grip to aid with adjustments. All mounting hardware is included.

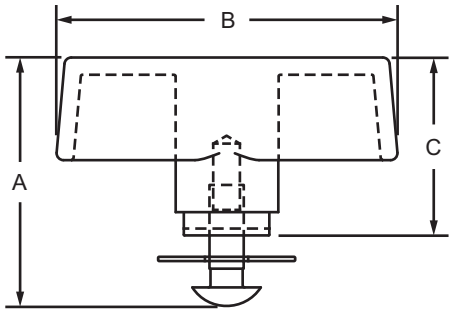

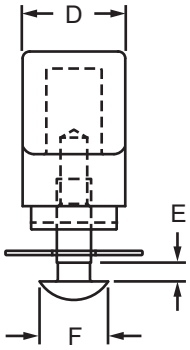

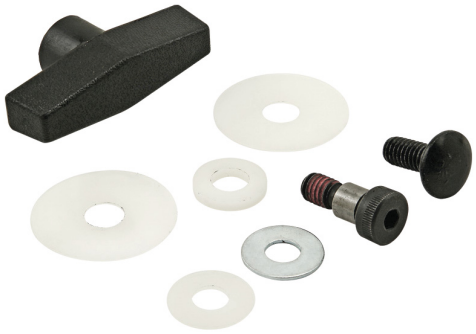

Part No.	Series	A	B	C	D	E	F	Weight
2798	10	1.815"	2.490"	1.300"	.750"	.138"	.500"	.078 lbs
2799	15	1.815"	2.490"	1.225"	.750"	.140"	.704"	.116 lbs
25-2798	25	46.10mm	63.26mm	33.02mm	19.05mm	3.51mm	12.70mm	.0445 kg
40-2799	40	46.76mm	63.26mm	31.12mm	19.05mm	3.56mm	17.88mm	.0505 kg

Material Specifications

Material	Finish	Color
Steel / Polyproylene	Zinc / Matte	Black

Introduction to Pressure Manifolds

Manifolds are used to add a pressurized substance, such as liquids or air, into the center cavity of a T-slot profile. You'll commonly find this in material handling processes, such as work and assembly stations, because the pressurized profile allows you to incorporate pneumatic tools directly into the work area.

There are a range of access, feed, and stopper plates available to fit your structure.

As an example, a manifold configuration could include an access plate attached to the supply line and feed plate mounted where the pressurized substance is released. The stopper plate secures to the profile end to form a tight seal.

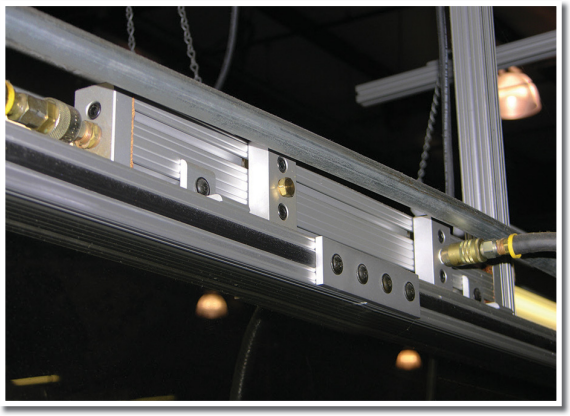

Did You Know?

80/20 carries a wide range of structural shapes that allow you to design a customized manifold.

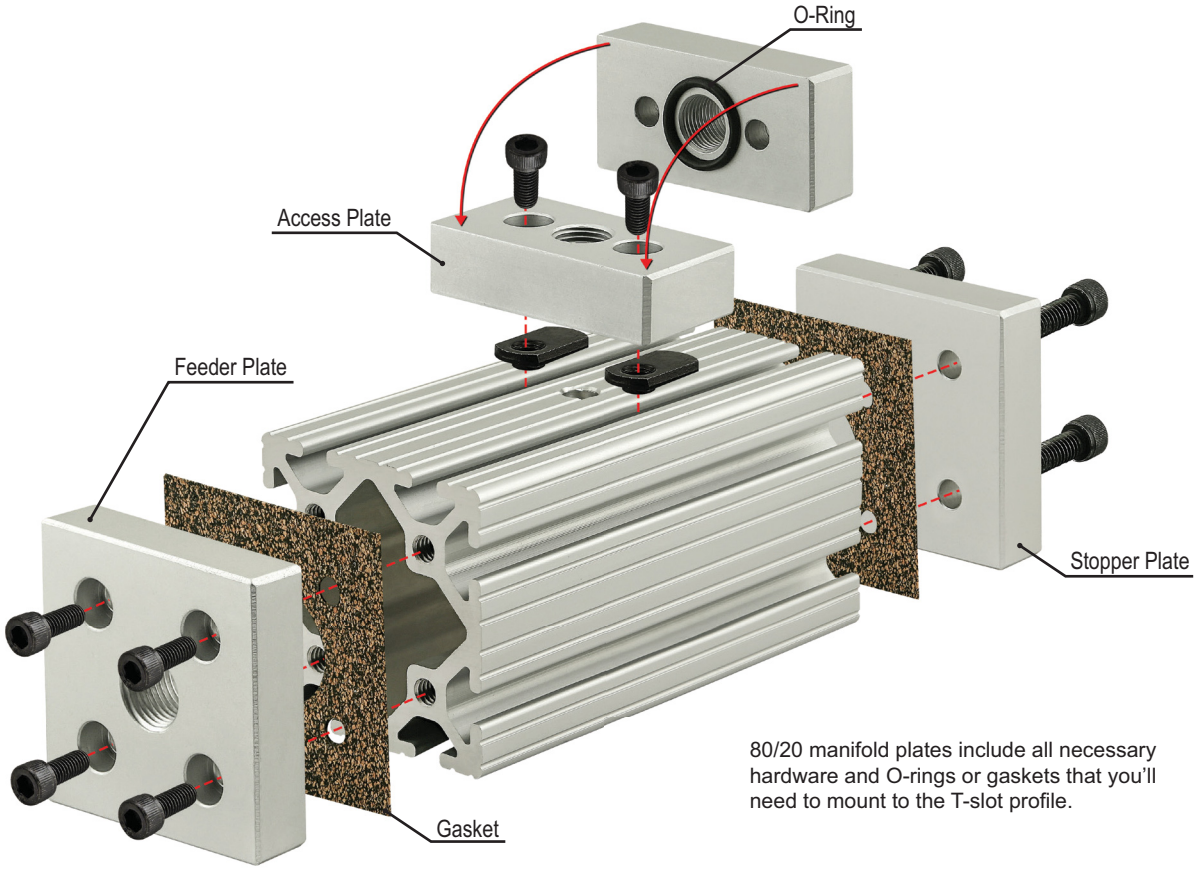

80/20 manifold plates include all necessary hardware and O-rings or gaskets that you'll need to mount to the T-slot profile.

3-Hole Pressure Manifold Feed Plate

The 3-hole pressure manifold feed plate is commonly used when adding a pressurized substance to a T-slot profile. It has a tapped hole and mounts on the profile end to seal the connection where the pressurized substance is released. The suggested mounting hardware and gasket are included. The maximum allowable pressure is 150 psi (1034.21 kPa).

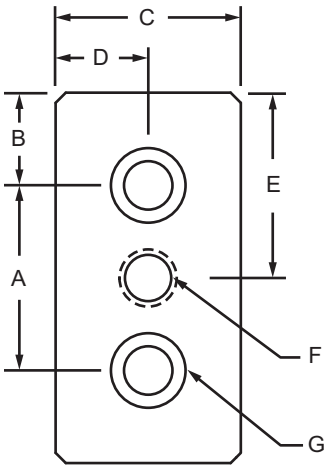

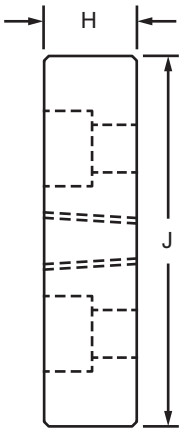

Part No.	Series	Color	A	B	C	D	E	F (Thread)	G (Bolt Size)	H	J	Weight
2151	10	Clear	1.000"	.500"	1.000"	.500"	1.000"	1/4" NPT	1/4 SHCS	.490"	2.000"	.112 lb
2151-Black	10	Black	1.000"	.500"	1.000"	.500"	1.000"	1/4" NPT	1/4 SHCS	.490"	2.000"	.112 lb
2150	15	Clear	1.500"	.750"	1.500"	.750"	1.500"	3/8" NPT	5/16 SHCS	.740"	3.000"	.339 lb
2150-Black	15	Black	1.500"	.750"	1.500"	.750"	1.500"	3/8" NPT	5/16 SHCS	.740"	3.000"	.339 lb
25-2151	25	Clear	25.00mm	12.50mm	25.00mm	12.50mm	25.00mm	1/4" NPT	M6 SHCS	11.75mm	50.00mm	.0462 kg
25-2151-Black	25	Black	25.00mm	12.50mm	25.00mm	12.50mm	25.00mm	1/4" NPT	M6 SHCS	11.75mm	50.00mm	.0462 kg
40-2150	40	Clear	40.00mm	20.00mm	40.00mm	20.00mm	40.00mm	3/8" NPT	M8 SHCS	18.75mm	80.00mm	.1697 kg
40-2150-Black	40	Black	40.00mm	20.00mm	40.00mm	20.00mm	40.00mm	3/8" NPT	M8 SHCS	18.75mm	80.00mm	.1697kg

* Included mounting hardware and material specifications can be seen on page 753

3-Hole Gasket for Pressure Manifold

The 3-hole gasket for pressure manifold is made of a cork and synthetic rubber combination used to prevent leakage. It is used with manifold plates to completely seal a profile end or create a tight seal where a substance is released.

Part No.	Series	Color	Material	A	B	C	D	E	F	G	H	J	Weight
2152	10	Brown	velumoid	1.000"	.500"	1.000"	.500"	1.000"	.515"	.265"	.030"	2.000"	.001 lb
2153	15		CR-20	1.500"	.750"	1.500"	.750"	1.500"	.775"	.275"	.030"	3.000"	.003 lb
25-2152	25		velumoid	25.00mm	12.50mm	25.00mm	12.50mm	25.00mm	12.50mm	6.00mm	0.76mm	50.00mm	.0007 kg
40-2153	40		CR-20	40.00mm	20.00mm	40.00mm	20.00mm	40.00mm	20.00mm	7.00mm	0.76mm	80.00mm	.0018 kg

CONTINUE

2-Hole Pressure Manifold Stopper Plate

The 2-hole pressure manifold stopper plate is commonly used when adding a pressurized substance to a T-slot profile. It mounts on the profile end to form a secure seal. The suggested mounting hardware and gasket are included. The maximum allowable pressure is 150 psi (1034.21 kPa).

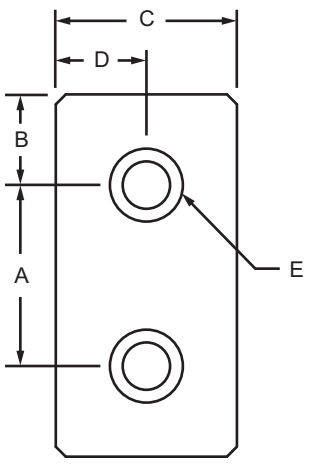

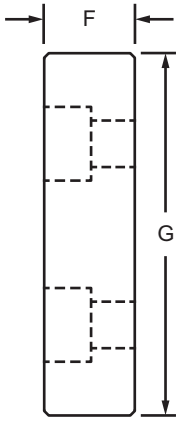

Part No.	Series	Color	A	B	C	D	E (Bolt Size)	F	G	Weight
2341	10	Clear	1.000"	.500"	1.000"	.500"	1/4 SHCS	.490"	2.000"	.120 lb
2341-Black	10	Black	1.000"	.500"	1.000"	.500"	1/4 SHCS	.490"	2.000"	.120 lb
2340	15	Clear	1.500"	.750"	1.500"	.750"	5/16 SHCS	.740"	3.000"	.362 lb
2340-Black	15	Black	1.500"	.750"	1.500"	.750"	5/16 SHCS	.740"	3.000"	.362 lb
25-2341	25	Clear	25.00mm	12.50mm	25.00mm	12.50mm	M6 SHCS	11.75mm	50.00mm	.0499 kg
25-2341-Black	25	Black	25.00mm	12.50mm	25.00mm	12.50mm	M6 SHCS	11.75mm	50.00mm	.0499 kg
40-2340	40	Clear	40.00mm	20.00mm	40.00mm	20.00mm	M8 SHCS	18.75mm	80.00mm	.1787 kg
40-2340-Black	40	Black	40.00mm	20.00mm	40.00mm	20.00mm	M8 SHCS	18.75mm	80.00mm	.1787 kg

Plate Material Specifications

Material	Alloy*	Finish	Process
Aluminum	6105-T5	Anodize	Milled

* Or comparable

Required Machining Services

Machining Type	Machined	Reference Page
Tap Profile End	Mounting Profile	861

Included Hardware (Mount to T-Slot)

Part No.	Series	Qty.	Bolt
3071	10	2	1/4-20 x 1" SHCS
3119	15	2	5/16-18 x 7/8" SHCS
13-6525	25	2	M6 x 25mm SHCS
13-8522	40	2	M8 x 22mm SHCS

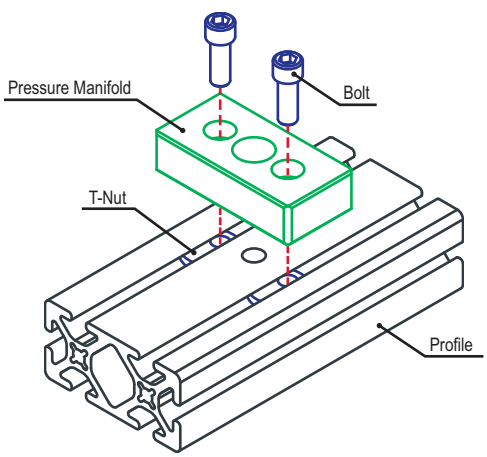

CONTINUE

5-Hole Square Pressure Manifold Feed Plate

The 5-hole square pressure manifold feed plate is commonly used when adding a pressurized substance to a T-slot profile. It has a tapped hole and mounts on the profile end to seal the connection where the pressurized substance is released. The suggested mounting hardware and gasket are included. The maximum allowable pressure is 150 psi (1034.21 kPa).

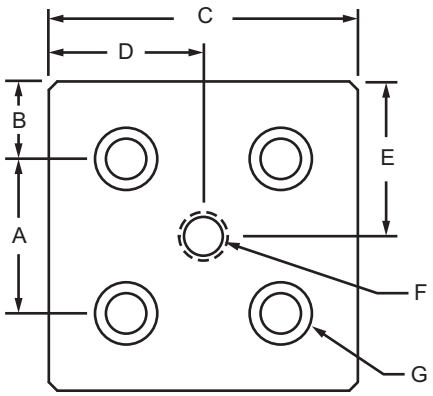

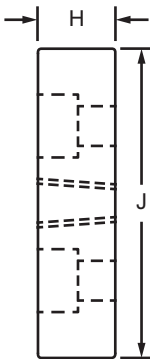

Part No.	Series	Color	A	B	C	D	E	F (Thread)	G (Bolt Size)	H	J	Weight
2159	10	Clear	1.000"	.500"	2.000"	1.000"	1.000"	3/8" NPT	1/4 SHCS	.490"	2.000"	.176 lb
2159-Black	10	Black	1.000"	.500"	2.000"	1.000"	1.000"	3/8" NPT	1/4 SHCS	.490"	2.000"	.176 lb
2160	15	Clear	1.500"	.750"	3.000"	.750"	1.500"	1/2" NPT	5/16 SHCS	.740"	3.000"	.685 lb
2160-Black	15	Black	1.500"	.750"	3.000"	.750"	1.500"	1/2" NPT	5/16 SHCS	.740"	3.000"	.685 lb
25-2159	25	Clear	25.00mm	12.50mm	50.00mm	12.50mm	25.00mm	3/8" NPT	M6 SHCS	11.75mm	50.00mm	.0938 kg
25-2159-Black	25	Black	25.00mm	12.50mm	50.00mm	12.50mm	25.00mm	3/8" NPT	M6 SHCS	11.75mm	50.00mm	.0938 kg
40-2160	40	Clear	40.00mm	20.00mm	80.00mm	20.00mm	40.00mm	1/2" NPT	M8 SHCS	18.75mm	80.00mm	.3424kg
40-2160-Black	40	Black	40.00mm	20.00mm	80.00mm	20.00mm	40.00mm	1/2" NPT	M8 SHCS	18.75mm	80.00mm	.3424 kg

* Included mounting hardware and material specifications can be seen on page 755

5-Hole Square Gasket for Pressure Manifold

The 5-hole square gasket for pressure manifold is made of a cork and synthetic rubber combination used to prevent leakage. It is used with manifold plates to completely seal a profile end or create a tight seal where a substance is released.

Part No.	Series	Color	Material	A	B	C	D	E	F	G	H	J	Weight
2154	10	Brown	CR-20	1.000"	.500"	2.000"	1.000"	1.000"	.750"	.265"	.030"	2.000"	.003 lb
2155	15			1.500"	.750"	3.000"	.750"	1.500"	1.250"	.285"	.030"	3.000"	.007 lb
25-2154	25			25.00mm	12.50mm	50.00mm	12.50mm	25.00mm	12.50mm	6.00mm	.76mm	50.00mm	.0013 kg
40-2155	40			40.00mm	20.00mm	80.00mm	20.00mm	40.00mm	33.00mm	7.00mm	.76mm	80.00mm	.0032 kg

CONTINUE

4-Hole Pressure Manifold Stopper Plate

The 4-hole pressure manifold stopper plate is commonly used when adding a pressurized substance to a T-slot profile. It mounts on the profile end to form a secure seal. The suggested mounting hardware and gasket are included. The maximum allowable pressure is 150 psi (1034.21 kPa).

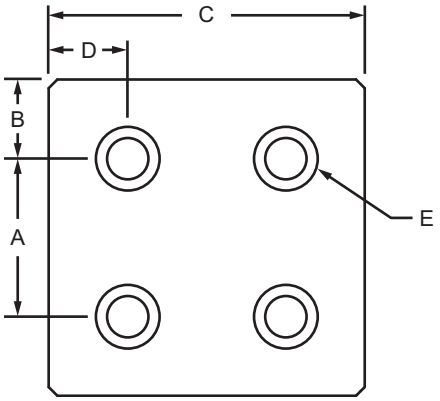

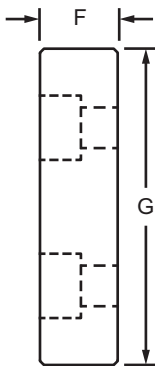

Part No.	Series	Color	A	B	C	D	E (Bolt Size)	F	G	Weight
2349	10	Clear	1.000"	.500"	2.000"	.500"	1/4 SHCS	.490"	2.000"	.238 lb
2349-Black	10	Black	1.000"	.500"	2.000"	.500"	1/4 SHCS	.490"	2.000"	.238 lb
2350	15	Clear	1.500"	.750"	3.000"	.750"	5/16 SHCS	.740"	3.000"	.721 lb
2350-Black	15	Black	1.500"	.750"	3.000"	.750"	5/16 SHCS	.740"	3.000"	.721 lb
25-2349	25	Clear	25.00mm	12.50mm	50.00mm	12.50mm	M6 SHCS	11.75mm	50.00mm	.0999 kg
25-2349-Black	25	Black	25.00mm	12.50mm	50.00mm	12.50mm	M6 SHCS	11.75mm	50.00mm	.0999 kg
40-2350	40	Clear	40.00mm	20.00mm	80.00mm	20.00mm	M8 SHCS	18.75mm	80.00mm	.3621 kg
40-2350-Black	40	Black	40.00mm	20.00mm	80.00mm	20.00mm	M8 SHCS	18.75mm	80.00mm	.3621 kg

Plate Material Specifications

Material	Alloy*	Finish	Process
Aluminum	6105-T5	Anodize	Milled

* Or comparable

Required Machining Services

Machining Type	Machined	Reference Page
Tap Profile End	Mounting Profile	861

Included Hardware (Mount to T-Slot)

Part No.	Series	Qty.	Bolt
3071	10	4	1/4-20 x 1" SHCS
3119	15	4	5/16-18 x 7/8" SHCS
13-6525	25	4	M6 x 25mm SHCS
13-8522	40	4	M8 x 22mm SHCS

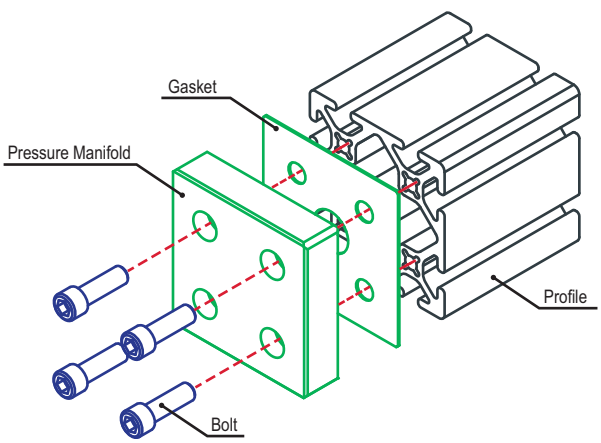

CONTINUE

Pressure Manifolds (Continued)

5-Hole Rectangular Pressure Manifold Feed Plate

The 5-hole rectangular pressure manifold feed plate is commonly used when adding a pressurized substance to a T-slot profile. It has a tapped hole and mounts on the profile end to seal the connection where the pressurized substance is released. The suggested mounting hardware and gasket are included. The maximum allowable pressure is 150 psi (1034.21 kPa).

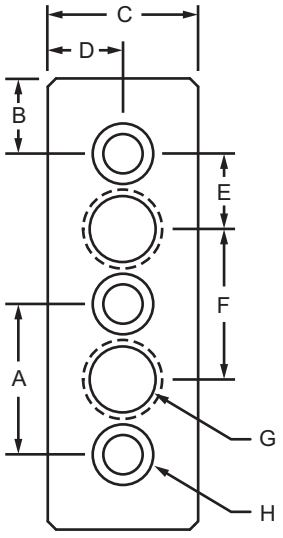

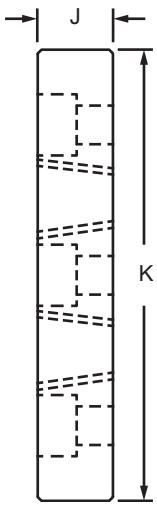

Part No.	Series	Color	A	B	C	D	E	F	G (Thread)	H (Bolt Size)	J	K	Weight
2447	10	Clear	1.000"	.500"	1.000"	.500"	.500"	1.000"	1/4" NPT	1/4 SHCS	.490"	3.000"	.161 lb
2447-Black	10	Black	1.000"	.500"	1.000"	.500"	.500"	1.000"	1/4" NPT	1/4 SHCS	.490"	3.000"	.161 lb
2162	15	Clear	1.500"	.750"	1.500"	.750"	.750"	1.500"	3/8" NPT	5/16 SHCS	.740"	4.500"	.495 lb
2162-Black	15	Black	1.500"	.750"	1.500"	.750"	.750"	1.500"	3/8" NPT	5/16 SHCS	.740"	4.500"	.495 lb

* Included mounting hardware and material specifications can be seen on page 757

5-Hole Rectangular Gasket for Pressure Manifold

The 5-hole rectangular gasket for pressure manifold is made of a cork and synthetic rubber combination used to prevent leakage. It is used with manifold plates to completely seal a profile end or create a tight seal where a substance is released.

Part No.	Series	Color	Material	A	B	C	D	E	F	G	H	J	K	Weight
2172	10	Brown	CR-20	1.000"	.500"	1.000"	.500"	.500"	1.000"	.515"	.265"	.030"	2.000"	.002 lb
2133	15			1.500"	.750"	1.500"	.750"	.750"	1.500"	.750"	.265"	.030"	4.500"	.006 lb

CONTINUE

3-Hole Pressure Manifold Stopper Plate

The 3-hole pressure manifold stopper plate is commonly used when adding a pressurized substance to a T-slot profile. It mounts on the profile end to form a secure seal. The suggested mounting hardware and gasket are included. The maximum allowable pressure is 150 psi (1034.21 kPa).

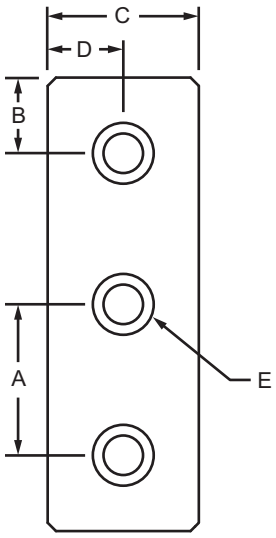

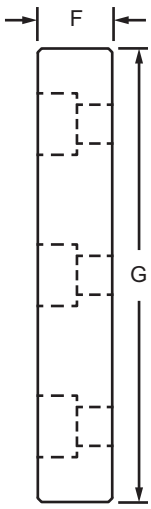

Part No.	Series	Color	A	B	C	D	E (Bolt Size)	F	G	Weight
2446	10	Clear	1.000"	.500"	1.000"	.500"	1/4 SHCS	.490"	3.000"	.178 lb
2446-Black	10	Black	1.000"	.500"	1.000"	.500"	1/4 SHCS	.490"	3.000"	.178 lb
2161	15	Clear	1.500"	.750"	1.500"	.750"	5/16 SHCS	.740"	4.500"	.540 lb
2161-Black	15	Black	1.500"	.750"	1.500"	.750"	5/16 SHCS	.740"	4.500"	.540 lb

Plate Material Specifications

Material	Alloy*	Finish	Process
Aluminum	6105-T5	Anodize	Milled

* Or comparable

Required Machining Services

Machining Type	Machined	Reference Page
Tap Profile End	Mounting Profile	861

Included Hardware (Mount to T-Slot)

Part No.	Series	Qty.	Bolt
3071	10	3	1/4-20 x 1" SHCS
3119	15	3	5/16-18 x 7/8" SHCS

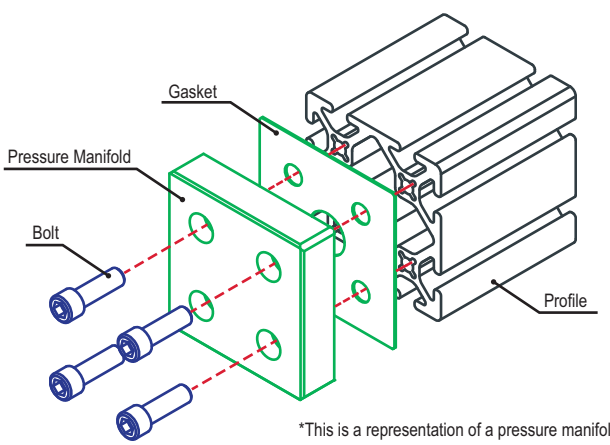

*This is a representation of a pressure manifold.

CONTINUE

12-Hole Pressure Manifold Feed Plate

The 12-hole pressure manifold feed plate is commonly used when adding a pressurized substance to a T-slot profile. It has a tapped hole and mounts on the profile end to seal the connection where the pressurized substance is released. The suggested mounting hardware and gasket are included. The maximum allowable pressure is 150 psi (1034.21 kPa).

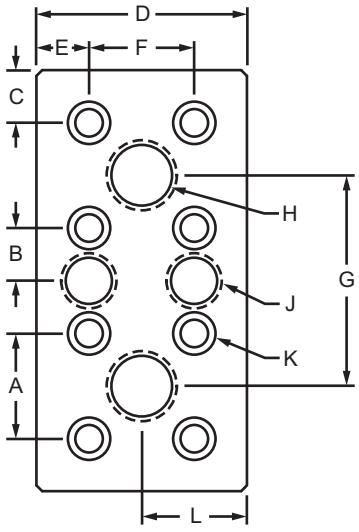

Part No.	Series	Color	A	B	C	D	E	F	G	H (Thread)	J (Thread)	K (Thread)	L	M	N	Weight
2449	10	Clear	1.000"	.500"	.500"	2.000"	.500"	1.000"	2.000"	3/8" NPT	1/4" NPT	1/4 SHCS	1.000"	.490"	4.000"	.320 lb
2449-Black	10	Black	1.000"	.500"	.500"	2.000"	.500"	1.000"	2.000"	3/8" NPT	1/4" NPT	1/4 SHCS	1.000"	.490"	4.000"	.320lb
2164	15	Clear	1.500"	.750"	.750"	3.000"	.750"	1.500"	3.000"	1/2" NPT	3/8" NPT	5/16 SHCS	1.500"	.740"	6.000"	1.328 lb
2164-Black	15	Black	1.500"	.750"	.750"	3.000"	.750"	1.500"	3.000"	1/2" NPT	3/8" NPT	5/16 SHCS	1.500"	.740"	6.000"	1.328 lb

* Included mounting hardware and material specifications can be seen on page 759

12-Hole Gasket for Pressure Manifold

The 12-hole gasket for pressure manifold is made of a cork and synthetic rubber combination used to prevent leakage. It is commonly used with manifold plates to completely seal a profile end or create a tight seal where a substance is released.

Part No.	Series	Color	Material	A	B	C	D	E	F	G	H	J	K	L	M	N	Weight
2173	10	Brown	Velumoid	1.000"	.500"	.500"	2.000"	.500"	1.000"	2.000"	.750"	.530"	.265"	1.000"	.030"	4.000"	.006 lb
2144	15			1.500"	.750"	.750"	3.000"	.750"	1.500"	3.000"	1.250"	.750"	.275"	1.500"	.030"	6.000"	.012 lb

CONTINUE

8-Hole Pressure Manifold Stopper Plate

The 8-hole pressure manifold stopper plate is commonly used when adding a pressurized substance to a T-slot profile. It mounts on the profile end to form a secure seal. The suggested mounting hardware and a gasket are included. The maximum allowable pressure is 150 psi (1034.21 kPa).

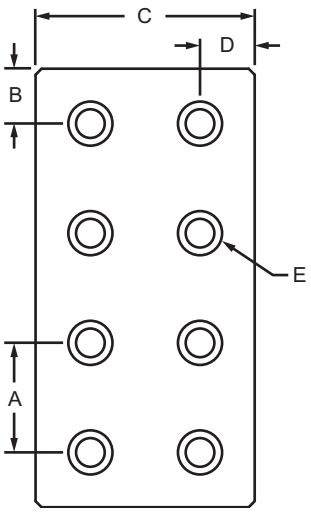

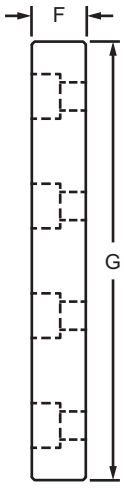

Part No.	Series	Color	A	B	C	D	E (Bolt Size)	F	G	Weight
2448	10	Clear	1.000"	.500"	2.000"	.500"	1/4 SHCS	.490"	4.000"	.472 lb
2448-Black	10	Black	1.000"	.500"	2.000"	.500"	1/4 SHCS	.490"	4.000"	.472 lb
2163	15	Clear	1.500"	.750"	3.000"	.750"	5/16 SHCS	.740"	6.000"	1.483 lb
2163-Black	15	Black	1.500"	.750"	3.000"	.750"	5/16 SHCS	.740"	6.000"	1.483 lb

Plate Material Specifications

Material	Alloy*	Finish	Process
Aluminum	6105-T5	Anodize	Milled

* Or comparable

Required Machining Services

Machining Type	Machined	Reference Page
Tap Profile End	Mounting Profile	861

Included Hardware (Mount to T-Slot)

Part No.	Series	Qty.	Bolt
3071	10	8	1/4-20 x 1" SHCS
3119	15	8	5/16-18 x 7/8" SHCS

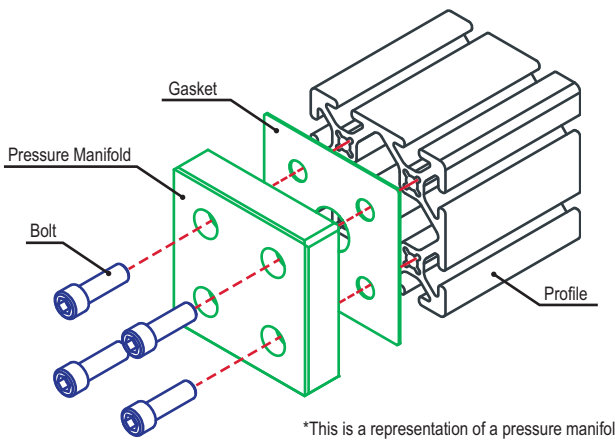

*This is a representation of a pressure manifold.

CONTINUE

Pressure Manifold Access Plate

The pressure manifold access plate is commonly used when adding a pressurized substance to a T-slot profile. It has a tapped hole, mounts to the profile side, and includes an attached O-ring to provide a tight seal where the pressurized substance is released. The maximum allowable pressure is 150 psi (1034.21 kPa). The suggested mounting hardware is included.

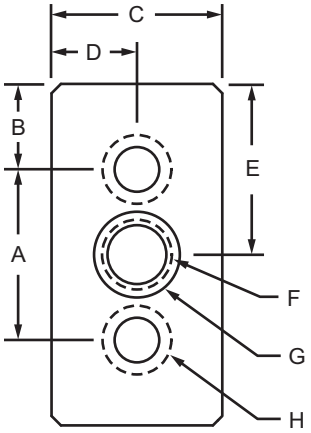

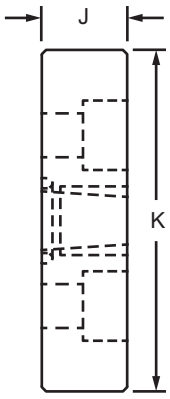

Part No.	Series	Color	A	B	C	D	E	F (Thread)	G (O-Ring Size)	H (Bolt Size)	J	K	Weight
2439	10	Clear	1.000"	.500"	1.000"	.500"	1.000"	1/8" NPT	1/2" OD	1/4 SHCS	.500"	2.000"	.126 lb
2439-Black	10	Black	1.000"	.500"	1.000"	.500"	1.000"	1/8" NPT	1/2" OD	1/4 SHCS	.500"	2.000"	.125 lb
2440	15	Clear	1.500"	.750"	1.500"	.750"	1.500"	1/4" NPT	1" OD	5/16 SHCS	.750"	3.000"	.387 lb
2440-Black	15	Black	1.500"	.750"	1.500"	.750"	1.500"	1/4" NPT	1" OD	5/16 SHCS	.750"	3.000"	.387 lb
2441	15	Clear	1.500"	.750"	1.500"	.750"	1.500"	3/8" NPT	1" OD	5/16 SHCS	.750"	3.000"	.376 lb
2441-Black	15	Black	1.500"	.750"	1.500"	.750"	1.500"	3/8" NPT	1" OD	5/16 SHCS	.750"	3.000"	.376 lb
25-2439	25	Clear	25.00mm	12.50mm	25.00mm	12.50mm	25.00mm	1/8" NPT	1/2" OD	M6 SHCS	12.00mm	50.00mm	.0524 kg
25-2439-Black	25	Black	25.00mm	12.50mm	25.00mm	12.50mm	25.00mm	1/8" NPT	1/2" OD	M6 SHCS	12.00mm	50.00mm	.0524 kg
40-2440	40	Clear	40.00mm	20.00mm	40.00mm	20.00mm	40.00mm	1/4" NPT	1" OD	M8 SHCS	19.00mm	80.00mm	.1907 kg
40-2440-Black	40	Black	40.00mm	20.00mm	40.00mm	20.00mm	40.00mm	1/4" NPT	1" OD	M8 SHCS	19.00mm	80.00mm	.1907 kg
40-2441	40	Clear	40.00mm	20.00mm	40.00mm	20.00mm	40.00mm	3/8" NPT	1" OD	M8 SHCS	19.00mm	80.00mm	.1870 kg
40-2441-Black	40	Black	40.00mm	20.00mm	40.00mm	20.00mm	40.00mm	3/8" NPT	1" OD	M8 SHCS	19.00mm	80.00mm	.1870 kg

* Included mounting hardware and material specifications can be seen on page 761

O-Ring for Pressure Manifold

The O-ring for pressure manifold is commonly used with manifold plates to completely seal a profile side or create a tight seal where a substance is released. It is used to prevent leakage.

Part No.	Series	Material	Grade	Color	A	B	Weight
2157	10	Nitrile	70 duro	Black	.500"	.062"	.0002 lb
2156	15				1.000"	.100"	.0010 lb
25-2157	25				12.70mm	1.59mm	.0001 kg
40-2156	40				25.40mm	2.54mm	.0005 kg

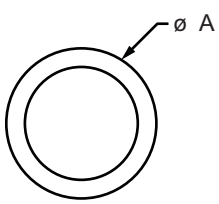

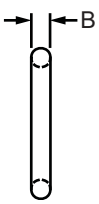

CONTINUE

Pressure Manifold Tap Ready Access Plate

The pressure manifold tap ready access plate is commonly used when adding a pressurized substance to a T-slot profile. It has a tap-ready access point, mounts to the profile side, and includes an attached O-ring to form a tight seal. The maximum allowable pressure is 150 psi (1034.21 kPa). The suggested mounting hardware is included.

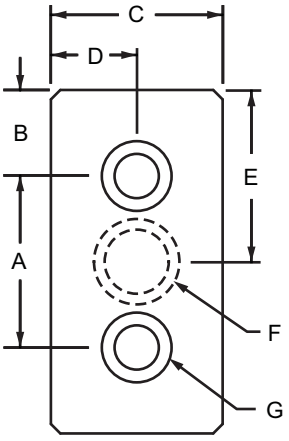

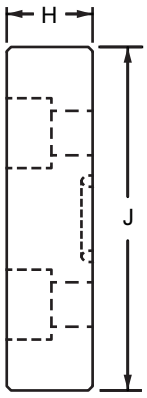

Part No.	Series	Color	A	B	C	D	E	F (O-Ring Size)	G (Bolt Size)	H	J	Weight
2451	10	Clear	1.000"	.500"	1.000"	.500"	1.000"	1/2" OD	1/4 SHCS	.500"	2.000"	.127 lb
2451-Black	10	Black	1.000"	.500"	1.000"	.500"	1.000"	1/2" OD	1/4 SHCS	.500"	2.000"	.127 lb
2450	15	Clear	1.500"	.750"	1.500"	.750"	1.500"	1" OD	5/16 SHCS	.750"	3.000"	.397 lb
2450-Black	15	Black	1.500"	.750"	1.500"	.750"	1.500"	1" OD	5/16 SHCS	.750"	3.000"	.397 lb
25-2451	25	Clear	25.00mm	12.50mm	25.00mm	12.50mm	25.00mm	1/2" OD	M6 SHCS	12.00mm	50.00mm	.0544 kg
25-2451-Black	25	Black	25.00mm	12.50mm	25.00mm	12.50mm	25.00mm	1/2" OD	M6 SHCS	12.00mm	50.00mm	.0544 kg
40-2450	40	Clear	40.00mm	20.00mm	40.00mm	20.00mm	40.00mm	1" OD	M8 SHCS	19.00mm	80.00mm	.1962 kg
40-2450-Black	40	Black	40.00mm	20.00mm	40.00mm	20.00mm	40.00mm	1" OD	M8 SHCS	19.00mm	80.00mm	.1962 kg

Plate Material Specifications

Material	Alloy*	Finish	Process
Aluminum	6105-T5	Anodize	Milled

* Or comparable

Required Machining Services

Machining Type	Machined	Reference Page
Manifold Access Profile Milling	Mounting Profile	879

Included Hardware (Mount to T-Slot)

Series	Part No.	Qty.	Bolt	Part No.	Qty.	T-Nut
10	3062	2	1/4-20 x 1/2" SHCS	3382	2	Economy
15	3119	2	5-16/18 x 7/8" SHCS	3278	2	Economy
25	13-6512	2	M6 x 12mm SHCS	3859	2	Economy
40	13-8522	2	M8 x 22mm SHCS	3838	2	Economy

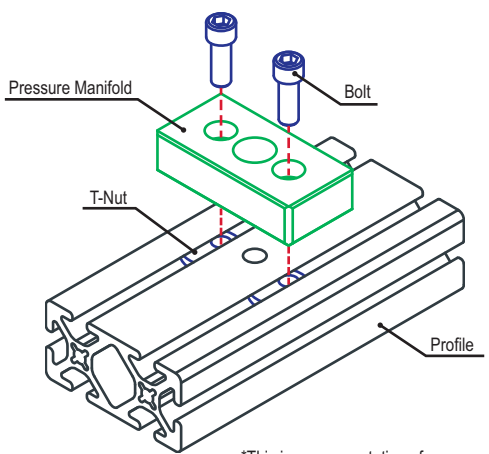

*This is a representation of a pressure manifold.

Gravity Roller

Part Description:

The gravity roller is typically used with Ready Tube® profiles or gravity roller mounting blocks (page 763) and T-slot profiles to build custom material handling and conveyor applications. The roller has spring-loaded pins that snap easily into the holes of a Ready Tube® profile. The roller is aluminum with plastic inserts, making it a strong and durable option. There are lengths available to accommodate frame openings from 15-27 inches (381-685.8mm) wide.

Part No.	Series	Material	Process	Finish	A	B	Weight
9840	15 40 45 RT	Aluminum / Plastic	Assembled	Clear Anodize	1.625"	11.815"	1.065 lb
9841	15 40 45 RT					13.315"	1.153 lb
9842	15 40 45 RT					14.815"	1.241 lb
9843	15 40 45 RT					16.315"	1.330 lb
9844	15 40 45 RT					17.815"	1.418 lb
9845	15 40 45 RT					19.315"	1.506 lb
9846	15 40 45 RT					20.815"	1.595 lb
9847	15 40 45 RT					22.305"	1.683 lb
9848	15 40 45 RT					23.815"	1.772 lb

Part No.	Description
9740*	Gravity Roller Tube
7010	Machining Cut Charge for 9740
7165	Two Gravity Roller Ends Assembled on Custom Length Tube

* Specify length when ordering

Part Description:

The gravity roller mounting block is made of fiberglass reinforced black nylon and is commonly used with gravity rollers (page 762) in material handling applications. The block secures in the T-slot (see suggested mounting hardware below) and the roller pin snaps in and out of the block.

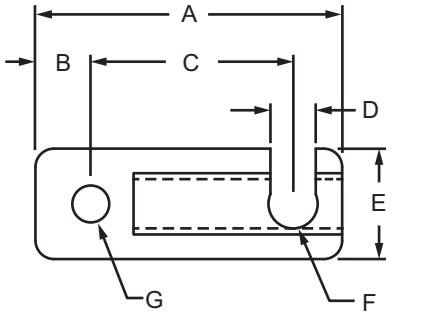

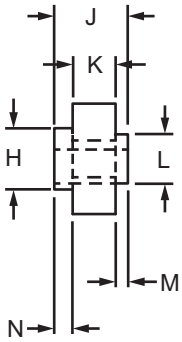

Part No.	Series	A	B	C	D	E	F	G	H	J	K	L	M	N	Weight
12167	15 40 45	1.969"	.354"	1.299"	.291"	.709"	.314"	.236"	.394"	.472"	.276"	.315"	.079"	.118"	.019 lb

Material Specifications

Material	Grade	Process	Finish
Glass Filled Nylon	PA6 GF30	Molded	Matte Black

Suggested Hardware (Mount to T-Slot)

Part No.	Series	Qty.	Bolt	T-Nut
75-3601	15 40	1	M6 x 14mm BHSCS	Drop-In
75-3482	45	1	M6 x 18mm BHSCS	Drop-In

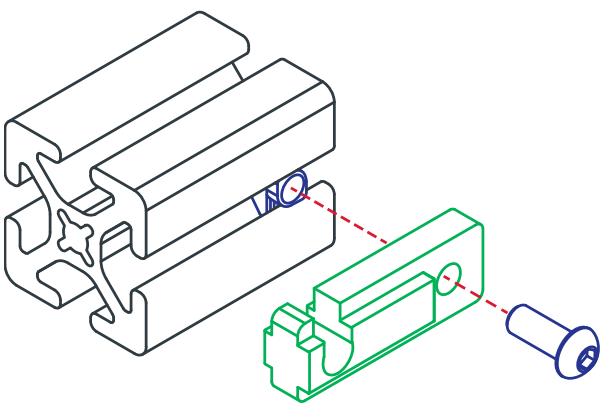

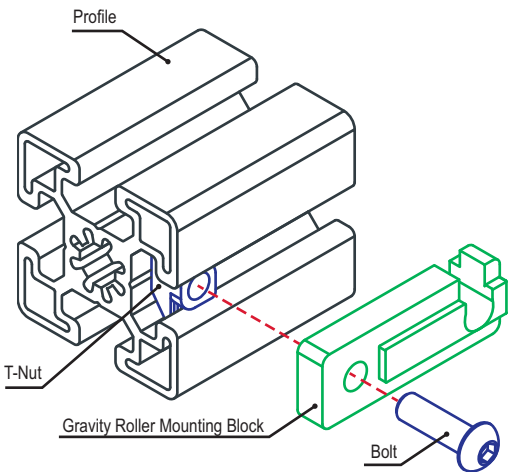

Connector Rod / Connector Rod Profile

Part Description:

The connector rod is commonly used with Ready Tube® profiles in material handling or conveyor applications for connecting side rails on gravity roller sections. The connector rod comes in predetermined lengths or in a stock profile of 145" (3683mm). The stock profile can be cut to your desired length and tapped.

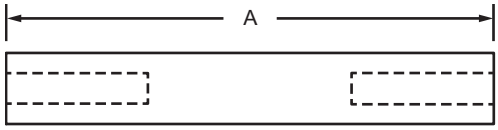

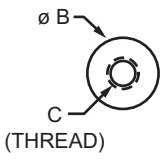

Part No.	Series	Material	Alloy*	Process	Finish	A	B	C	Weight
9821	RT	Aluminum	6105-T5	Machined	Clear Anodize	11.875"	.750"	5/16-18	0.407 lb
9822	RT					13.375"	.750"	5/16-18	0.494 lb
9823	RT					14.875"	.750"	5/16-18	0.550 lb
9824	RT					16.375"	.750"	5/16-18	0.605 lb
9825	RT					17.875"	.750"	5/16-18	0.661 lb
9826	RT					19.375"	.750"	5/16-18	0.716 lb
9827	RT					20.875"	.750"	5/16-18	0.772 lb
9828	RT					22.375"	.750"	5/16-18	0.827 lb
9829	RT					23.875"	.750"	5/16-18	0.883 lb
9830	RT					25.375"	.750"	5/16-18	0.938 lb
9831	RT					26.875"	.750"	5/16-18	0.994 lb

* Or comparable

Suggested Hardware (Mount to RT Profile)

Part No.	Series	Qty.	Bolt
3754	F	2	5/16-18 x 2.25" Flanged Hex Head Bolt

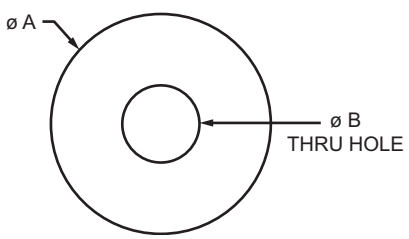

Part No.	Series	Material	Alloy*	Process	Finish	A	B	Stock Length	Weight
9820	RT	Aluminum	6105-T5	Extruded	Clear Anodize	.750"	.262"	145"	.037 lb / in.
9820-Black	RT				Black Anodize				

* Or comparable

Required Machining Services

Machining Type	Machined	Reference Page
Connector Rod End Tap	Connector Rod Profile	883

Suggested Hardware (Mount to RT Profile)

Part No.	Series	Qty.	Bolt
3754	F	2	5/16-18 x 2.25" Flanged Hex Head Bolt
13-3947	M	2	M8 x 60mm BHSCS

Part Description:

The P-tube stopper is commonly used as a material end stop on Ready Tube® gravity rack assemblies.

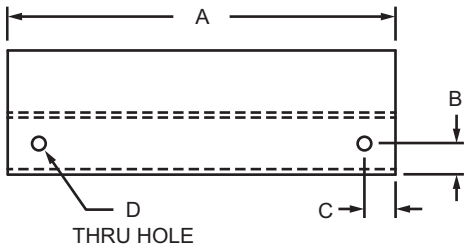

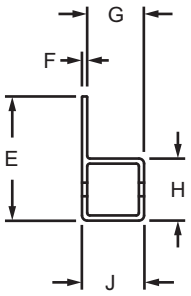

Part No.	Series	A	B	C	D	E	F	G	H	J	Weight
9860	RT	14.875"	.750"	.750"	.328"	3.000"	.125"	1.375"	1.500"	1.500"	1.197 lb
9861	RT	16.375"									1.317 lb
9862	RT	17.875"									1.436 lb
9863	RT	19.375"									1.556 lb
9864	RT	20.875"									1.676 lb
9865	RT	22.375"									1.795 lb
9866	RT	23.875"									1.915 lb
9867	RT	25.375"									2.035 lb
9868	RT	26.875"									2.155 lb

Material Specifications

Material	Alloy*	Process	Finish
Aluminum	6105-T5	Machined	Clear Anodize

* Or comparable

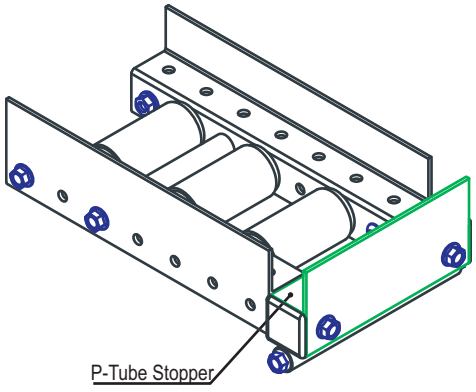

Building with Gravity Roller Components

Use the chart below starting with "A" to determine your part numbers for building a gravity roller component.

Opening "A"	Between Guide Rail Reference "B"	Connector "C" Part No.	Roller "G" Part No.	Stopper "P" Part No.	Support "S" Part No.
15.0"	11.875"	9821	9840	9860	9823
16.5"	13.375"	9822	9841	9861	9824
18.0"	14.875"	9823	9842	9862	9825
19.5"	16.375"	9824	9843	9863	9826
21.0"	17.875"	9825	9844	9864	9827
22.5"	19.375"	9826	9845	9865	9828
24.0"	20.875"	9827	9846	9866	9829
25.5"	22.375"	9828	9847	9867	9830
27.0"	23.875"	9829	9848	9868	9831

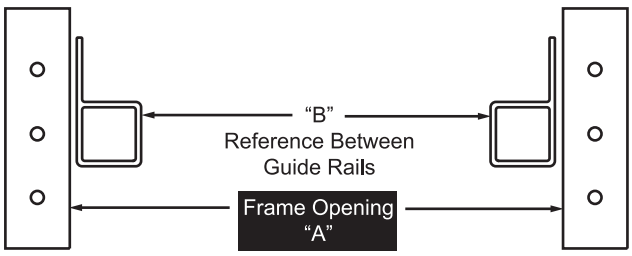

Example: If "A" = 18.00"

Part No.	Descripton
9823	"C" 14.875" Connector Rod
9842	"G" 14.815" Gravity Roller
9862	"P" 17.875" P-Tube Stopper
9825	"S" 17.875" Support Connector Rod

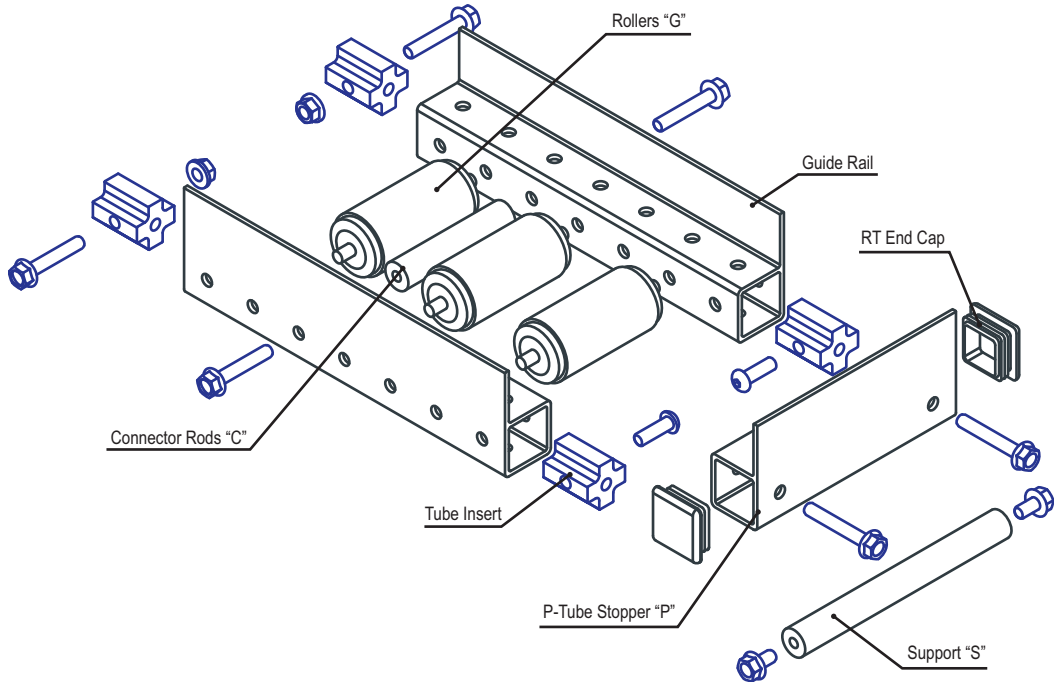

Introduction to Stanchions

Stanchions are typically used with 80/20 aluminum tubes to create an additional axis. Stanchions are a more permanent, precise, and stable base than alternatives, such as clamps.

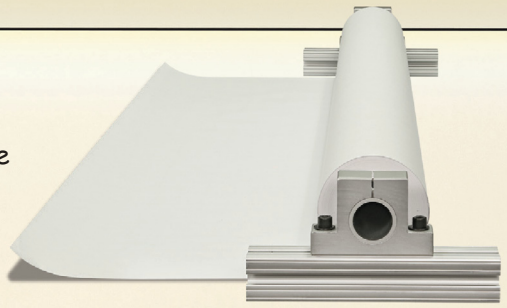

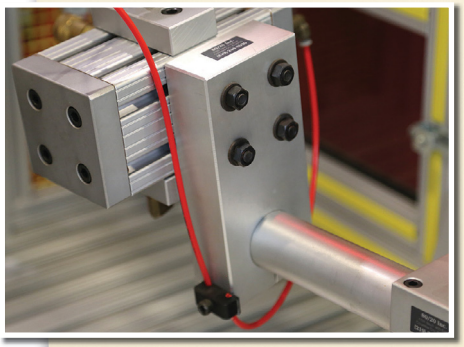

Variety of Bases

There are different bases to choose from that allow you to add vertical or horizontal axes or a combination of the two. You also have options that support two axes using just one base or even the ability to create an off-set axis.

Incorporate Tubes, Wires & Cables

You will also want to consider adding a handle to your stanchion block; they enable flexibility in positioning and easy repositioning if you will be moving the tube frequently.

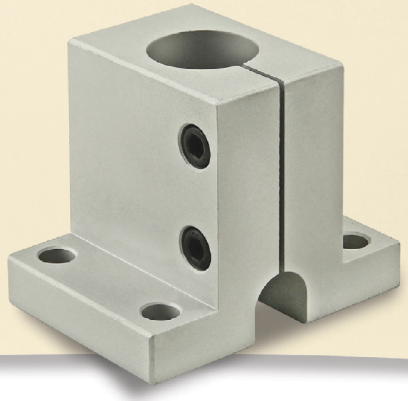

Need to Know

If your project will incorporate tubes, wires or cables there are bases available with clearance holes to accommodate.

Single Shaft Stanchion Base

Part Description:

The single shaft stanchion base is commonly used with the aluminum tube profile (page 835) to create an additional axis. The tube connects parallel to the mounted base, and there is a clearance channel for running wires or cables. The base is aluminum, making it a strong and durable option. Clamp screws are included while the suggested hardware to mount the base to a T-slot can be found below.

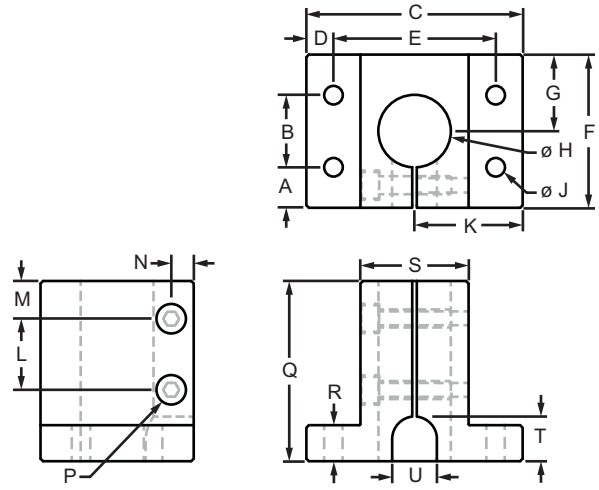

Part No.	Series	Color	Material	Alloy*	Finish	Process	A	B	C	D	E	F	G	H
5050	10	Clear	Aluminum	6105-T5	Anodize	Milled	.563"	1.000"	3.000"	.375"	2.250"	2.125"	1.063"	1.004"
5050-Black	10	Black					.563"	1.000"	3.000"	.375"	2.250"	2.125"	1.063"	1.004"
5100	15	Clear					.312"	1.500"	3.000"	.375"	2.250"	2.125"	1.063"	1.004"
5100-Black	15	Black					.312"	1.500"	3.000"	.375"	2.250"	2.125"	1.063"	1.004"
5200	15	Clear					.500"	1.500"	3.874"	.437"	3.000"	2.500"	1.250"	1.505"
5200-Black	15	Black					.500"	1.500"	3.874"	.437"	3.000"	2.500"	1.250"	1.505"
5300	15	Clear					.875"	1.500"	4.750"	.500"	3.750"	3.250"	1.625"	2.005"
5300-Black	15	Black					.875"	1.500"	4.750"	.500"	3.750"	3.250"	1.625"	2.005"

	J	K	L	M	N	P	Q	R	S	T	U	Weight
5050	.257"	1.500"	.990"	.520"	.312"	1/4-20 SHCS	2.500"	.500"	1.500"	.620"	.620"	.714 lb
5050-Black	.257"	1.500"	.990"	.520"	.312"	1/4-20 SHCS	2.500"	.500"	1.500"	.620"	.620"	.714 lb
5100	.328"	1.500"	.990"	.520"	.312"	1/4-20 SHCS	2.500"	.500"	1.500"	.620"	.620"	.705 lb
5100-Black	.328"	1.500"	.990"	.520"	.312"	1/4-20 SHCS	2.500"	.500"	1.500"	.620"	.620"	.705 lb
5200	.328"	1.937"	1.110"	.580"	.302"	1/4-20 SHCS	3.000"	.750"	2.250"	.875"	.880"	1.369 lb
5200-Black	.328"	1.937"	1.110"	.580"	.302"	1/4-20 SHCS	3.000"	.750"	2.250"	.875"	.880"	1.369 lb
5300	.328"	2.375"	1.220"	.630"	.328"	1/4-20 SHCS	3.250"	.750"	2.750"	.750"	1.250"	2.251 lb
5300-Black	.328"	2.375"	1.220"	.630"	.328"	1/4-20 SHCS	3.250"	.750"	2.750"	.750"	1.250"	2.251 lb

* Or comparable

Suggested Hardware (Mount Stanchion to T-Slot)

Part No.	Bolt Assy.	Qty.	Bolt	T-Nut	Washer
5050	3471	4	1/4-20 x 7/8" SHCS	Economy	Yes
5100	3470	4	5/16-18 x 1" SHCS		
5200	3421	4	5/16-18 x 1.25" SHCS		
5300	3421	4	5/16-18 x 1.25" SHCS		

Part Description:

The double shaft stanchion base is commonly used with the aluminum tube profile (page 835) to create two additional axes. Tubes connect parallel to the mounted base, and there are clearance channels for running wire or cables. The stanchion is aluminum, making it a strong and durable option. Clamp screws are included while the suggested hardware to mount the base to a T-slot can be found below.

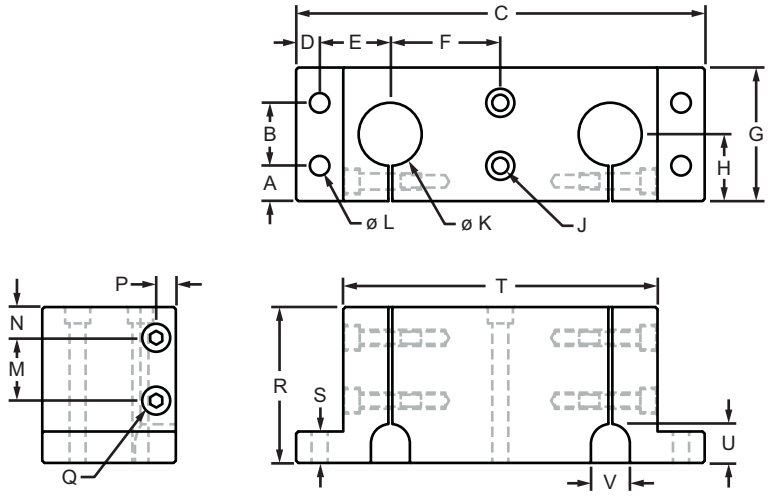

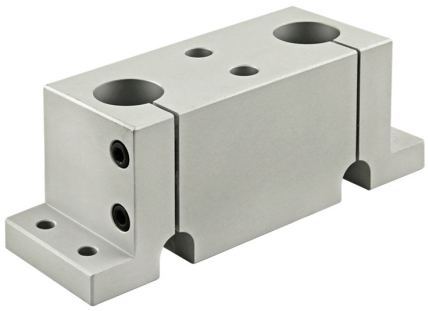

Part No.	Series	Color	Material	Alloy*	Finish	Process	A	B	C	D	E	F	G	H
5125	10	Clear	Aluminum	6105-T5	Anodize	Milled	.563"	1.000"	6.500"	.375"	1.125"	1.750"	2.125"	1.063"
5125-Black	10	Black					.563"	1.000"	6.500"	.375"	1.125"	1.750"	2.125"	1.063"
5150	15	Clear					.312"	1.500"	6.500"	.375"	1.125"	1.750"	2.125"	1.063"
5150-Black	15	Black					.312"	1.500"	6.500"	.375"	1.125"	1.750"	2.125"	1.063"
5250	15	Clear					.500"	1.500"	7.750"	.437"	1.500"	1.938"	2.500"	1.250"
5250-Black	15	Black					.500"	1.500"	7.750"	.437"	1.500"	1.938"	2.500"	1.250"
5350	15	Clear					.875"	1.500"	9.500"	.500"	1.875"	2.375"	3.250"	1.625"
5350-Black	15	Black					.875"	1.500"	9.500"	.500"	1.875"	2.375"	3.250"	1.625"

		J	K	L	M	N	P	Q	R	S	T	U	V	Weight
5125	10	1/4-20 SHCS	1.004"	.257"	1.000"	.490"	.312"	1/4-20 SHCS	2.480"	.500"	5.000"	.620"	.620"	1.878 lb
5125-Black	10	1/4-20 SHCS	1.004"	.257"	1.000"	.490"	.312"	1/4-20 SHCS	2.480"	.500"	5.000"	.620"	.620"	1.878 lb
5150	15	5/16-18 SHCS	1.004"	.328"	1.000"	.490"	.312"	1/4-20 SHCS	2.480"	.500"	5.000"	.620"	.620"	1.874 lb
5150-Black	15	5/16-18 SHCS	1.004"	.328"	1.000"	.490"	.312"	1/4-20 SHCS	2.480"	.500"	5.000"	.620"	.620"	1.874 lb
5250	15	5/16-18 SHCS	1.505"	.328"	1.110"	.560"	.302"	5/16-18 SHCS	2.980"	.750"	6.125"	.820"	.880"	3.650 lb
5250-Black	15	5/16-18 SHCS	1.505"	.328"	1.110"	.560"	.302"	5/16-18 SHCS	2.980"	.750"	6.125"	.820"	.880"	3.650 lb
5350	15	5/16-18 SHCS	2.005"	.328"	1.250"	.630"	.328"	5/16-18 SHCS	3.250"	.750"	7.500"	.750"	1.250"	6.090 lb
5350-Black	15	5/16-18 SHCS	2.005"	.328"	1.250"	.630"	.328"	5/16-18 SHCS	3.250"	.750"	7.500"	.750"	1.250"	6.090 lb

* Or comparable

Suggested Hardware (Mount Stanchion to T-Slot)

Part No.	Bolt Assy.	Qty.	Bolt	T-Nut	Washer		Bolt Assy.	Qty.	Bolt	T-Nut	Washer
5125	3471	4	1/4-20 x 7/8" SHCS	Economy	Yes	AND / OR	3434	2	1/4-20 x 2.5" SHCS	Economy	No
5150	3470	4	5/16-18 x 1" SHCS				3429	2	5/16-18 x 2.5" SHCS		
5250	3421	4	5/16-18 x 1.25" SHCS				3430	2	5/16-18 x 3" SHCS		
5350	3421	4	5/16-18 x 1.25" SHCS				3431	2	5/16-18 x 3.25" SHCS		

Single Shaft Blank Stanchion Mounting Plate

Part Description:

The single shaft blank stanchion mounting plate is commonly used with the aluminum tube profile (page 835) to create a custom offset axis. The tube connects perpendicular to the mounted base to form the stanchion. The plate is aluminum, making it a strong and durable option. Clamp screws are included.

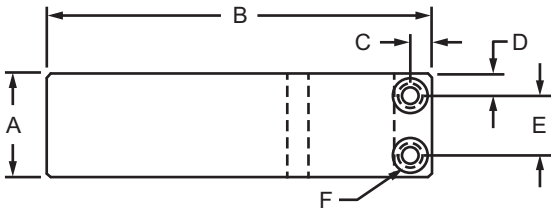

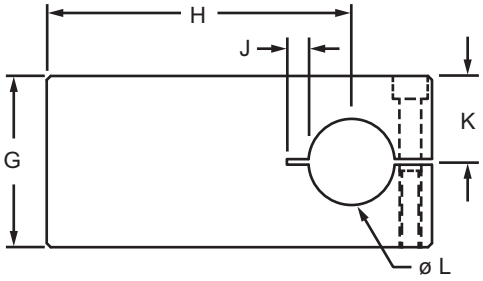

Part No.	Series	Color	Material	Alloy*	Finish	Process	A	B	C	D
5400	10	Clear	Aluminum	6105-T5	Anodize	Milled	1.200”	4.500”	.250”	.250”
5400-Black	10	Black					1.200”	4.500”	.250”	.250”
5450	15	Clear					1.450”	6.500”	.325”	.350”
5450-Black	15	Black					1.450”	6.500”	.325”	.350”

		E	F	G	H	J	K	L	Weight
5400	10	.700”	1/4-20 SHCS	2.000”	3.560”	.250”	1.000”	1.004”	.964 lb
5400-Black	10	.700”	1/4-20 SHCS	2.000”	3.560”	.250”	1.000”	1.004”	.964 lb
5450	15	.750”	1/4-20 SHCS	3.000”	5.125”	—	1.500”	1.505”	2.501 lb
5450-Black	15	.750”	1/4-20 SHCS	3.000”	5.125”		1.500”	1.505”	2.501 lb

* Or comparable

Part Description:

The single shaft pre-drilled stanchion mounting plate is commonly used with the aluminum tube profile (page 835) to create an offset axis. The tube connects perpendicular to the mounted base to form the stanchion. The plate is aluminum, making it a strong and durable option. Clamp screws are included while the suggested hardware to mount the base to a T-slot can be found below.

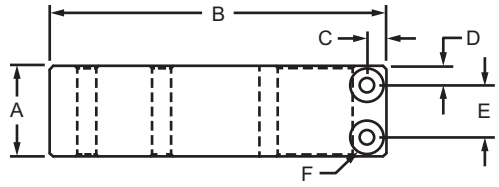

5415, 5425, 5475

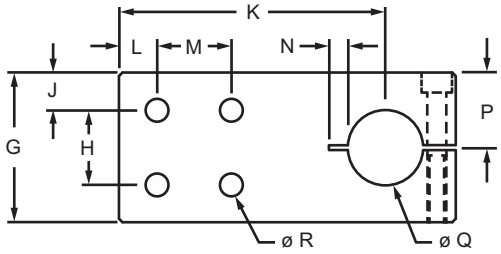

5525

Part No.	Series	Color	Material	Alloy*	Finish	Process	A	B	C	D	E	F
5415	10	Clear	Aluminum	6105-T5	Anodize	Milled	1.200"	4.500"	.250"	.250"	.700"	1/4-20 SHCS
5415-Black	10	Black					1.200"	4.500"	.250"	.250"	.700"	1/4-20 SHCS
5425	15	Clear					1.200"	4.500"	.250"	.250"	.700"	1/4-20 SHCS
5425-Black	15	Black					1.200"	4.500"	.250"	.250"	.700"	1/4-20 SHCS
5475	15	Clear					1.450"	6.500"	.328"	.350"	.750"	1/4-20 SHCS
5475-Black	15	Black					1.450"	6.500"	.328"	.350"	.750"	1/4-20 SHCS
5525	15	Clear					1.950"	7.750"	.375"	.350"	1.250"	5/16-18 SHCS
5525-Black	15	Black					1.950"	7.750"	.375"	.350"	1.250"	5/16-18 SHCS

		G	H	J	K	L	M	N	P	Q	R	Weight
5415	10	2.000"	1.000"	.500"	3.560"	.500"	1.000"	.250"	1.000"	1.004"	.257"	.946 lb
5415-Black	10	2.000"	1.000"	.500"	3.560"	.500"	1.000"	.250"	1.000"	1.004"	.257"	.946 lb
5425	15	2.000"	1.500"	.250"	3.560"	.500"	1.500"	.250"	1.000"	1.004"	.328"	.936 lb
5425-Black	15	2.000"	1.500"	.250"	3.560"	.500"	1.500"	.250"	1.000"	1.004"	.328"	.936 lb
5475	15	3.000"	1.500"	.750"	5.125"	.750"	1.500"	—	1.500"	1.505"	.328"	2.494 lb
5475-Black	15	3.000"	1.500"	.750"	5.125"	.750"	1.500"		1.500"	1.505"	.328"	2.494 lb
5525	15	4.000"	1.500"	1.250"	6.120"	.750"	1.500"		2.000"	2.005"	.328"	5.220 lb
5525-Black	15	4.000"	1.500"	1.250"	6.120"	.750"	1.500"		2.000"	2.005"	.328"	5.220 lb

* Or comparable

Suggested Hardware (Mount Stanchion to T-Slot)

Part No.	Bolt Assy.	Qty.	Bolt	T-Nut	Washer
5415	3432	4	1/4-20 x 1.5" SHCS	Economy	Yes
5425	3423	4	5/16-18 x 1.75" SHCS		
5475	3424	4	5/16-18 x 2" SHCS		
5525	3428	6	5/16-18 x 2.5" SHCS		

Double Shaft Blank Stanchion Mounting Plate

Part Description:

The double shaft blank stanchion mounting plate is commonly used with the aluminum tube profile (page 835) to create custom double offset axes. Tubes connect perpendicular to the mounted base to form the stanchions. The plate is aluminum, making it a strong and durable option. Clamp screws are included.

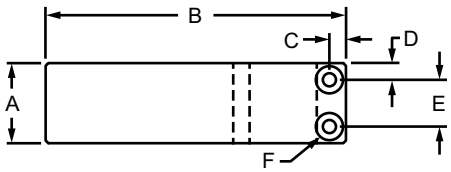

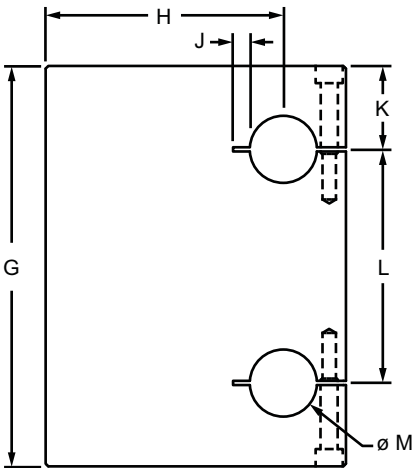

Part No.	Series	Color	Material	Alloy*	Finish	Process	A	B	C	D
5700	15	Clear	Aluminum	6105-T5	Anodize	Milled	1.200”	4.500”	.250”	.250”
5700-Black	15	Black					1.200”	4.500”	.250”	.250”
5750	15	Clear					1.450”	5.500”	.328”	.350”
5750-Black	15	Black					1.450”	5.500”	.328”	.350”

		E	F	G	H	J	K	L	M	Weight
5700	15	.700”	1/4-20 SHCS	6.000”	3.560”	.250”	1.250”	3.500”	1.004”	3.034 lb
5700-Black	15	.700”	1/4-20 SHCS	6.000”	3.560”	.250”	1.250”	3.500”	1.004”	3.034 lb
5750	15	.750”	1/4-20 SHCS	6.000”	4.125”	—	1.062”	3.875”	1.505”	4.180 lb
5750-Black	15	.750”	1/4-20 SHCS	6.000”	4.125”	—	1.062”	3.875”	1.505”	4.180 lb

* Or comparable

Part Description:

The stanchion cross clamp is commonly used with the aluminum tube profile (page 835) to create two axes that are perpendicular to each other. The cross clamp is aluminum, making it a strong and durable option. Clamp screws are included.

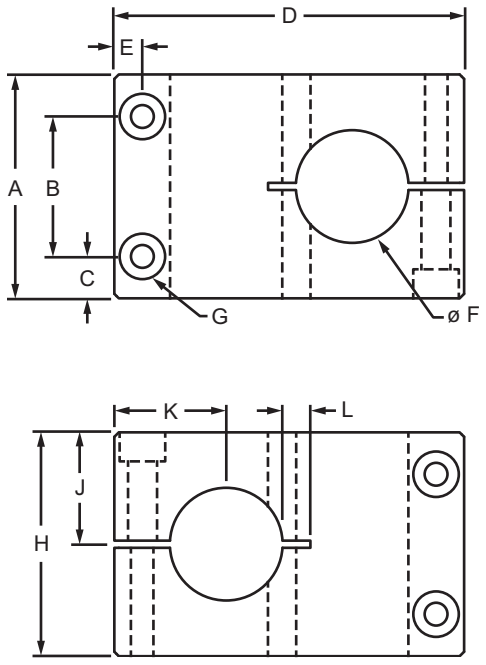

Part No.	Series	Color	Material	Alloy*	Finish	Process	A	B	C	D
5575	15	Clear	Aluminum	6105-T5	Anodize	Milled	2.000”	1.250”	.375”	3.125”
5575-Black	15	Black					2.000”	1.250”	.375”	3.125”
5625	15	Clear					2.500”	1.750”	.375”	4.125”
5625-Black	15	Black					2.500”	1.750”	.375”	4.125”
5675	15	Clear					3.250”	2.500”	.375”	5.500”
5675-Black	15	Black					3.250”	2.500”	.375”	5.500”

		E	F	G	H	J	K	L	Weight
5575	15	.250”	1.004”	1/4-20 SHCS	2.000”	1.000”	1.000”	.250”	.937 lb
5575-Black	15	.250”	1.004”	1/4-20 SHCS	2.000”	1.000”	1.000”	.250”	.937 lb
5625	15	.328”	1.505”	1/4-20 SHCS	2.500”	1.250”	1.250”	—	1.669 lb
5625-Black	15	.328”	1.505”	1/4-20 SHCS	2.500”	1.250”	1.250”		1.669 lb
5675	15	.312”	2.005”	5/16-18 SHCS	3.250”	1.625”	1.625”		3.689 lb
5675-Black	15	.312”	2.005”	5/16-18 SHCS	3.250”	1.625”	1.625”		3.689 lb

* Or comparable

Single Shaft Stanchion Mounting Block

Part Description:

The single shaft stanchion mounting block is commonly used with the aluminum tube profile (page 835), for connecting additional profiles or accessories. There are several pre-drilled holes to accommodate both positioning and a wide range of products. The block is aluminum, making it strong and durable. Stanchion clamp screws are included.

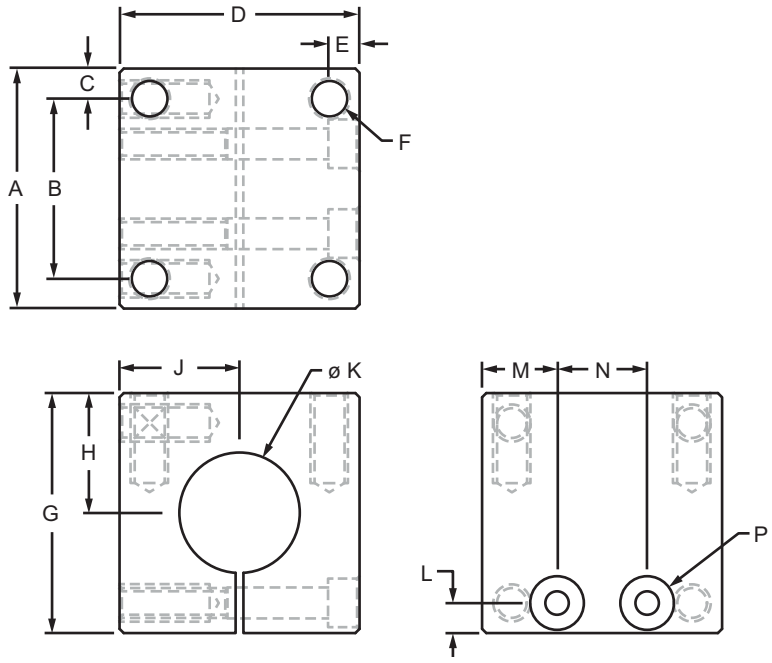

Part No.	Series	Color	Material	Alloy*	Finish	Process	A	B	C	D	E
5550	15	Clear	Aluminum	6105-T5	Anodize	Milled	2.000"	1.500"	.250"	2.000"	.250"
5550-Black	15	Black					2.000"	1.500"	.250"	2.000"	.250"
5600	15	Clear					2.500"	1.500"	.500"	2.500"	.500"
5600-Black	15	Black					2.500"	1.500"	.500"	2.500"	.500"

		F	G	H	J	K	L	M	N	P	Weight
5550	15	5/16-18	2.000"	1.000"	1.000"	1.004"	.250"	.625"	.750"	1/4-20 SHCS	.592 lb
5550-Black	15	5/16-18	2.000"	1.000"	1.000"	1.004"	.250"	.625"	.750"	1/4-20 SHCS	.592 lb
5600	15	5/16-18	2.500"	1.250"	1.250"	1.505"	.328"	.810"	.880"	1/4-20 SHCS	1.060 lb
5600-Black	15	5/16-18	2.500"	1.250"	1.250"	1.505"	.328"	.810"	.880"	1/4-20 SHCS	1.060 lb

* Or comparable

CONTINUE

Single Shaft Stanchion Mounting Block (Continued)

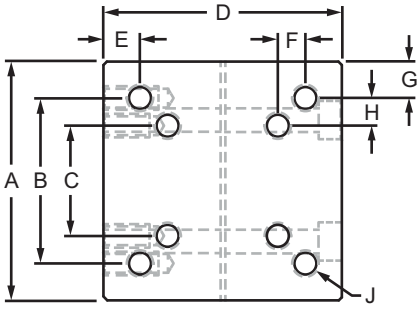

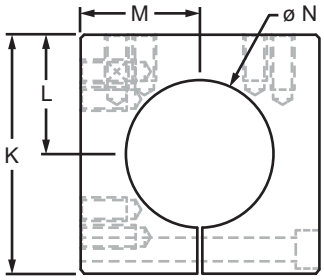

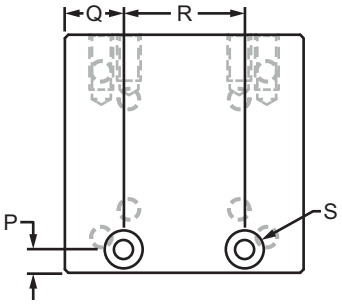

Part No.	Series	Color	Material	Alloy*	Finish	Process	A	B	C	D	E	F	G
5650	15	Clear	Aluminum	6105-T5	Anodize	Milled	3.250"	2.250"	1.500"	3.250"	.500"	.375"	.500"
5650-Black	15	Black					3.250"	2.250"	1.500"	3.250"	.500"	.375"	.500"

Part No.	Series	H	J	K	L	M	N	P	Q	R	S	Weight
5650	15	.375"	5/16-18	3.250"	1.625"	1.625"	2.005"	.328"	.800"	1.650"	5/16-18 SHCS	2.300 lb
5650-Black	15	.375"	5/16-18	3.250"	1.625"	1.625"	2.005"	.328"	.800"	1.650"	5/16-18 SHCS	2.300 lb

* Or comparable

YOU SHARE WE SHARE

SHARE YOUR DESIGN

Submit Your Photos to 80/20 and Win!

As a "Thank you" for sharing your 80/20 solutions we are offering you an incentive. For each project submission you will be entered into a drawing to win a coupon for your next online order.

Visit 8020.net for more information or to submit your solution.

Enter Now

Submit a Photo at 8020.net/photo-submit

Part Description:

The double shaft stanchion mounting block is commonly used with the aluminum tube profile (page 835) to create two additional axes. Tubes connect parallel to the mounted base to form the stanchions. The block is aluminum, making it a strong and durable option. Clamp screws are included. Suggested hardware to mount the base to a T-slot can be found below.

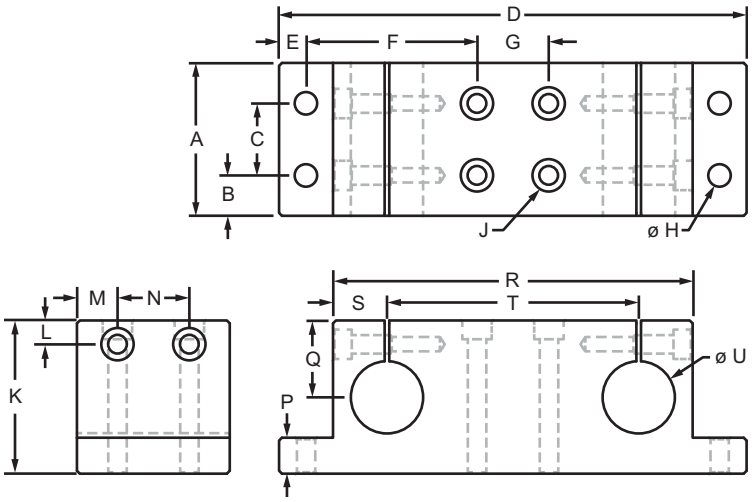

Part No.	Series	Color	Material	Alloy*	Finish	Process	A	B	C	D	E	F	G	H
5845	10	Clear	Aluminum	6105-T5	Anodize	Milled	2.125"	.563"	1.000"	6.500"	.375"	2.375"	1.000"	.257"
5845-Black	10	Black					2.125"	.563"	1.000"	6.500"	.375"	2.375"	1.000"	.257"
5850	15	Clear					2.125"	.312"	1.500"	6.500"	.375"	2.125"	1.500"	.328"
5850-Black	15	Black					2.125"	.312"	1.500"	6.500"	.375"	2.125"	1.500"	.328"
5900	15	Clear					2.500"	.500"	1.500"	7.750"	.375"	2.750"	1.500"	.328"
5900-Black	15	Black					2.500"	.500"	1.500"	7.750"	.375"	2.750"	1.500"	.328"
5950	15	Clear					3.250"	.875"	1.500"	9.500"	.500"	3.500"	1.500"	.328"
5950-Black	15	Black					3.250"	.875"	1.500"	9.500"	.500"	3.500"	1.500"	.328"

Part No.	Series	J	K	L	M	N	P	Q	R	S	T	U	Weight
5845	10	1/4-20 SHCS	2.130"	.330"	.563"	1.000"	.500"	1.068"	5.000"	.750"	3.500"	1.004"	1.861 lb
5845-Black	10	1/4-20 SHCS	2.130"	.330"	.563"	1.000"	.500"	1.068"	5.000"	.750"	3.500"	1.004"	1.861 lb
5850	15	5/16-18 SHCS	2.130"	.330"	.560"	1.000"	.500"	1.068"	5.000"	.750"	3.500"	1.004"	1.857 lb
5850-Black	15	5/16-18 SHCS	2.130"	.330"	.560"	1.000"	.500"	1.068"	5.000"	.750"	3.500"	1.004"	1.857 lb
5900	15	5/16-18 SHCS	2.500"	.325"	.500"	1.500"	.750"	1.125"	6.130"	1.128"	3.875"	1.505"	3.857 lb
5900-Black	15	5/16-18 SHCS	2.500"	.325"	.500"	1.500"	.750"	1.125"	6.130"	1.128"	3.875"	1.505"	3.061 lb
5950	15	5/16-18 SHCS	3.250"	.320"	.875"	1.500"	1.000"	1.625"	7.500"	1.375"	4.750"	2.005"	6.061 lb
5950-Black	15	5/16-18 SHCS	3.250"	.320"	.875"	1.500"	1.000"	1.625"	7.500"	1.375"	4.750"	2.005"	6.220 lb

* Or comparable

Suggested Hardware (Mount Stanchion to T-Slot)

Part No.	Bolt Assy.	Qty.	Bolt	T-Nut	Washer		Bolt Assy.	Qty.	Bolt	T-Nut	Washer
5845	3471	4	1/4-20 x 7/8" SHCS	Economy	Yes	AND / OR	3433	4	1/4-20 x 2.125" SHCS	Economy	No
5850	3470	4	5/16-18 x 1" SHCS				3427	4	5/16-18 x 2.25" SHCS		
5900	3421	4	5/16-18 x 1.25" SHCS				3429	4	5/16-18 x 2.5" SHCS		
5950	3422	4	5/16-18 x 1.5" SHCS				3431	4	5/16-18 x 3.25" SHCS		

Narrow Horizontal Stanchion Base

Part Description:

The narrow horizontal stanchion base is commonly used with the aluminum tube profile (page 835) to create an additional axis. The tube extends parallel from both sides of the mounted base. The base is aluminum, making it a strong and durable option. Clamp screws are included while the suggested hardware to mount the base to a T-slot can be found below.

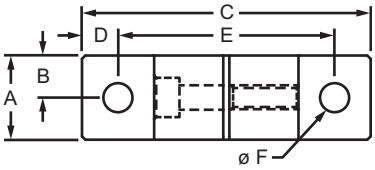

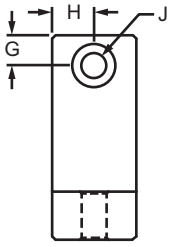

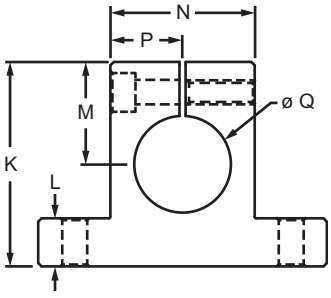

Part No.	Series	Color	Material	Alloy*	Finish	Process	A	B	C	D	E	F
5860	10	Clear	Aluminum	6105-T5	Anodize	Milled	.875"	.438"	3.000"	.375"	2.250"	.257"
5860-Black	10	Black					.875"	.438"	3.000"	.375"	2.250"	.257"
5870	15	Clear					.875"	.438"	3.000"	.375"	2.250"	.328"
5870-Black	15	Black					.875"	.438"	3.000"	.375"	2.250"	.328"
5880	15	Clear					1.125"	.560"	3.875"	.437"	3.000"	.328"
5880-Black	15	Black					1.125"	.560"	3.875"	.437"	3.000"	.328"
5890	15	Clear					1.437"	.718"	4.750"	.500"	3.750"	.328"
5890-Black	15	Black					1.437"	.718"	4.750"	.500"	3.750"	.328"

Part No.	Series	G	H	J	K	L	M	N	P	Q	Weight
5860	10	.313"	.438"	1/4-20 SHCS	2.125"	.500"	1.062"	1.500"	.750"	1.004"	.264 lb
5860-Black	10	.313"	.438"	1/4-20 SHCS	2.125"	.500"	1.062"	1.500"	.750"	1.004"	.264 lb
5870	15	.313"	.438"	1/4-20 SHCS	2.125"	.500"	1.062"	1.500"	.750"	1.004"	.262 lb
5870-Black	15	.313"	.438"	1/4-20 SHCS	2.125"	.500"	1.062"	1.500"	.750"	1.004"	.262 lb
5880	15	.313"	.560"	1/4-20 SHCS	2.500"	.750"	1.125"	2.253"	1.127"	1.505"	.547 lb
5880-Black	15	.313"	.560"	1/4-20 SHCS	2.500"	.750"	1.125"	2.253"	1.127"	1.505"	.547 lb
5890	15	.313"	.718"	5/16-18 SHCS	3.250"	1.000"	1.625"	2.750"	1.375"	2.005"	1.080 lb
5890-Black	15	.313"	.718"	5/16-18 SHCS	3.250"	1.000"	1.625"	2.750"	1.375"	2.005"	1.080 lb

* Or comparable

Suggested Hardware (Mount Stanchion to T-Slot)

Part No.	Bolt Assy.	Qty.	Bolt	T-Nut	Washer
5860	3471	2	1/4-20 x 7/8" SHCS	Economy	Yes
5870	3470	2	5/16-18 x 1" SHCS		
5880	3421	2	5/16-18 x 1.25" SHCS		
5890	3422	2	5/16-18 x 1.5" SHCS		

Part Description:

The wide horizontal stanchion base is commonly used with the aluminum tube profile (page 835) to create an additional axis. The tube extends parallel from both sides of the mounted base. It is a wider option, making it sturdy and durable. Clamp screws are included while the suggested hardware to mount the base to a T-slot can be found below.

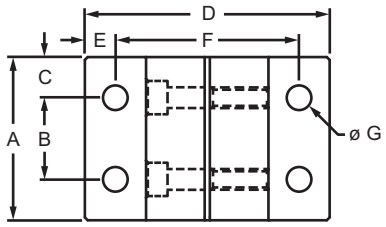

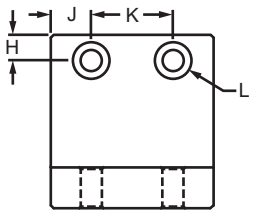

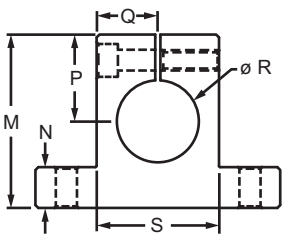

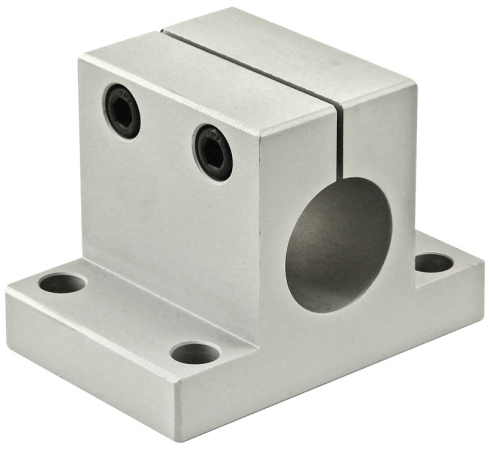

Part No.	Series	Color	Material	Alloy*	Finish	Process	A	B	C	D	E	F	G
5910	10	Clear	Aluminum	6105-T5	Anodize	Milled	2.000”	1.000”	.500”	3.000”	.375”	2.250”	.257”
5910-Black	10	Black					2.000”	1.000”	.500”	3.000”	.375”	2.250”	.257”
5920	15	Clear					2.000”	1.500”	.250”	3.000”	.375”	2.250”	.328”
5920-Black	15	Black					2.000”	1.500”	.250”	3.000”	.375”	2.250”	.328”
5930	15	Clear					2.500”	1.500”	.500”	3.875”	.438”	3.000”	.328”
5930-Black	15	Black					2.500”	1.500”	.500”	3.875”	.438”	3.000”	.328”
5940	15	Clear					3.250”	1.500”	.875”	4.750”	.500”	3.750”	.328”
5940-Black	15	Black					3.250”	1.500”	.875”	4.750”	.500”	3.750”	.328”

Part No.	Series	H	J	K	L	M	N	P	Q	R	S	Weight
5910	10	.313”	.500”	1.000”	1/4-20 SHCS	2.125”	.500”	1.063”	.750”	1.004”	1.500”	.604 lb
5910-Black	10	.313”	.500”	1.000”	1/4-20 SHCS	2.125”	.500”	1.063”	.750”	1.004”	1.500”	.604 lb
5920	15	.313”	.500”	1.000”	1/4-20 SHCS	2.125”	.500”	1.063”	.750”	1.004”	1.500”	.596 lb
5920-Black	15	.313”	.500”	1.000”	1/4-20 SHCS	2.125”	.500”	1.063”	.750”	1.004”	1.500”	.596 lb
5930	15	.313”	.500”	1.500”	1/4-20 SHCS	2.500”	.750”	1.375”	1.128”	1.505”	2.255”	1.222 lb
5930-Black	15	.313”	.500”	1.500”	1/4-20 SHCS	2.500”	.750”	1.375”	1.128”	1.505”	2.255”	1.222 lb
5940	15	.313”	.875”	1.500”	5/16-18 SHCS	3.250”	1.000”	1.625”	1.375”	2.005”	2.750”	2.470 lb
5940-Black	15	.313”	.875”	1.500”	5/16-18 SHCS	3.250”	1.000”	1.625”	1.375”	2.005”	2.750”	2.470 lb

* Or comparable

Suggested Hardware (Mount Stanchion to T-Slot)

Part No.	Bolt Assy.	Qty.	Bolt	T-Nut	Washer
5910	3471	4	1/4-20 x 7/8” SHCS	Economy	Yes
5920	3470	4	5/16-18 x 1” SHCS		
5930	3421	4	5/16-18 x 1.25” SHCS		
5940	3422	4	5/16-18 x 1.5” SHCS		

Horizontal Stanchion Quick Clamp

Part Description:

The horizontal stanchion quick clamp is commonly used with the aluminum tube profile (page 835) to create an additional axis. The tube extends parallel from both sides of the mounted base. The clamp includes a black nylon racheting handle (page 782) that enables easy positioning and repositioning.

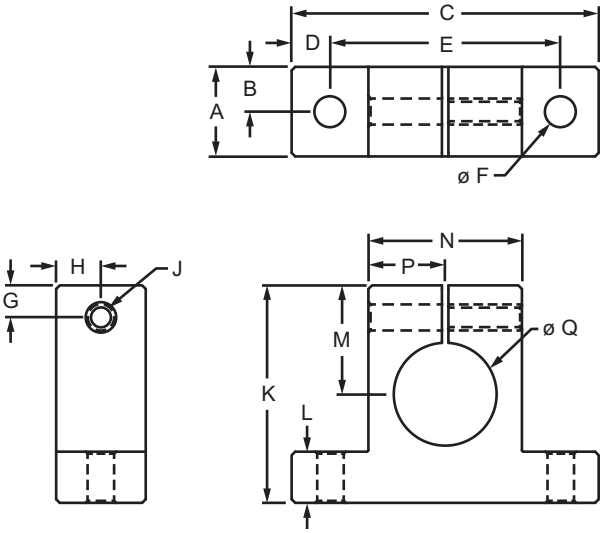

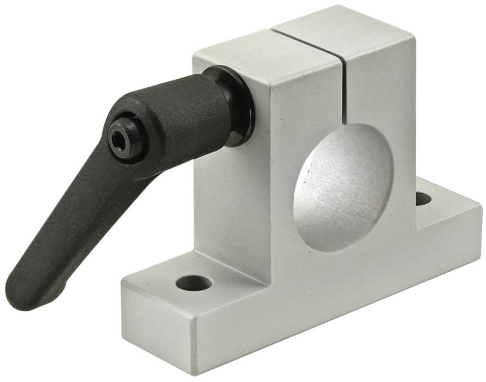

Part No.	Series	Color	Material	Alloy*	Finish	Process	A	B	C	D	E	F
5360	10	Clear	Aluminum	6105-T5	Anodize	Milled	.875"	.438"	3.000"	.375"	2.250"	.257"
5360-Black	10	Black					.875"	.438"	3.000"	.375"	2.250"	.257"
5370	15	Clear					.875"	.438"	3.000"	.375"	2.250"	.328"
5370-Black	15	Black					.875"	.438"	3.000"	.375"	2.250"	.328"

		G	H	J	K	L	M	N	P	Q	Weight
5360	10	.313"	.438"	1/4-20	2.125"	.500"	1.062"	1.500"	.750"	1.004"	.304 lb
5360-Black	10	.313"	.438"	1/4-20	2.125"	.500"	1.062"	1.500"	.750"	1.004"	.304 lb
5370	15	.313"	.438"	1/4-20	2.125"	.500"	1.062"	1.500"	.750"	1.004"	.299 lb
5370-Black	15	.313"	.438"	1/4-20	2.125"	.500"	1.062"	1.500"	.750"	1.004"	.299 lb

* Or comparable

Suggested Hardware (Mount Stanchion to T-Slot)

Part No.	Bolt Assy.	Qty.	Bolt	T-Nut	Washer
5360	3471	2	1/4-20 x 7/8" SHCS	Economy	Yes
5370	3470	2	5/16-18 x 1" SHCS		

Part Description:

The quick stanchion cross clamp is commonly used with the aluminum tube profile (page 835) to create two custom axes that are perpendicular to each other. It includes two black nylon racheting handles (page 782) that enable easy positioning and repositioning. The stanchion cross clamp is aluminum, making it a strong and durable option.

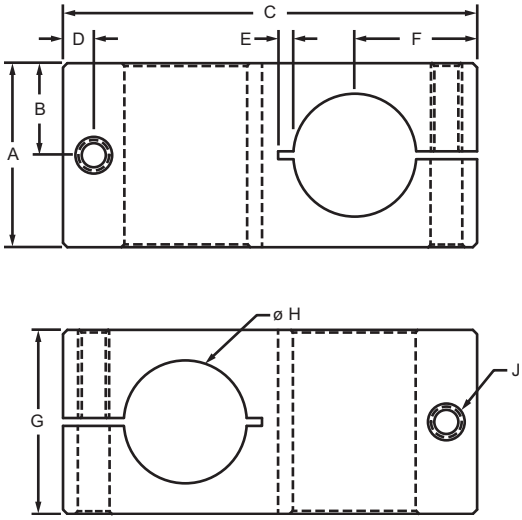

Part No.	Series	Color	Material	Alloy*	Finish	Process	A	B	C	D	E	F	G	H	J	Weight
5340	F	Clear	Aluminum	6105-T5	Anodize	Milled	1.500”	.750”	3.375”	.250”	.125”	1.000”	1.500”	1.004”	1/4-20	.577 lb
5340-Black	F	Black					1.500”	.750”	3.375”	.250”	.125”	1.000”	1.500”	1.004”	1/4-20	.577 lb

* Or comparable

Stanchion Clamp Handle

Part Description:

The stanchion clamp handle is racheting, made of black nylon and is commonly used with a clamp to enable easy positioning and repositioning of a stanchion.

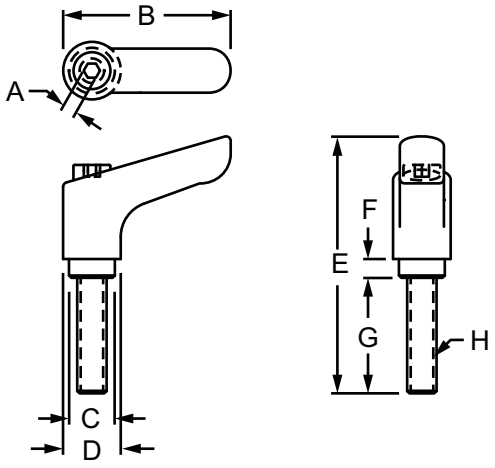

Part No.	Series	Material	Grade	Color	A	B	C	D	E	F	G	H	Weight
6847	F	Plastic	Nylon	Black	.120"	1.425"	.390"	.490"	2.463"	.160"	1.260"	1/4-20	.047 lb

Pictorial Table Of Contents

Finishing Touches

Page 785

Protection Options

Page 785

Wire & Cable Management
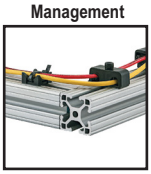
Page 786

Storage & Organization

Page 786

Accessories

End Cap with Push-In Fastener

Page 787

Push-In Fastener

Page 787

Self Tapping End Cap Screw

Page 788

End Cap with Molded Push-In Stem
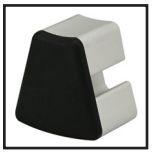
Page 789

Screw-On End Cap

Page 790

3 Way - Corner Bracket Cover Cap

Page 791

Ready Tube® End Cap

Page 792

Quick Frame® End Cap

Page 792

Aluminum T-Slot Cover

Page 793

Standard T-Slot Cover

Page 794

Economy T-Slot Cover

Page 795

Reduction T-Slot Cover

Page 796

Rubber T-Slot Cover

Page 797

Tread Strip

Page 798

Wire Housing

Page 799

Wire Housing Cover

Page 800

Wiring Duct

Page 801

Cable Tie
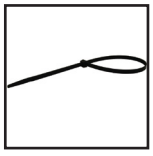
Page 802

Cable Tie Mounting Pad

Page 803

Drop-In Cable & Tube Clip

Page 804

Cable & Tube Clip

Page 805

Cable Tie Mounting Block

Page 806

Single Cable & Tube Clamp

Page 807

Double Cable & Tube Clamp

Page 808

Wiremold® Power Strip

Page 809

Anodize Breaker

Page 810

Grounding Terminal

Page 811

Storage Bin

Page 812

CONTINUE

Pictorial Table Of Contents

Storage Bin Hanger

Page 813

Heavy-Duty Monitor Mount

Page 814

Adjustable Monitor Mount

Page 815

Slide-In Tool Hanger

Page 816

Tool Hanger Spring Hook

Page 817

Vertical Mount Hook

Page 818

Horizontal Mount Hook

Page 819

Magnetic Tool Holder

Page 820

Tool Holder - Open Bottom

Page 821

Cup Holder - Closed Bottom

Page 822

Light-Duty Adhesive Clamp

Page 823

Label Holder

Page 824

Rubber Bumper

Page 825

Tabletop Mounting Tape

Page 826

Finishing Touches

80/20 accessories pull together your project and give it the finishing touches to make it fit your exact specifications. There are a wide variety of options; from storage and organization to wire and tube management, you'll find what you need to enhance and personalize your project.

When adding accessories, it's helpful to consider a few overall categories:

- Protection
- Wire & Cable Management
- Storage and Organization

Keep in Mind

Some products can be used in multiple categories. For instance, T-slot covers provide protection from debris buildup and can also be used to manage wires and cables recessed within the T-slot.

Protection

Accessories in this category are used for a range of purposes from protecting people and equipment from sharp edges and damage to keeping dust out of T- slots. Some of the products, such as T-slot covers and end caps, also add a finishing look to your project.

- End caps
- T-slot covers
- Tread strip
- Anodize breaker
- Grounding terminal
- Rubber bumper

Tip: Try aluminum T-slot covers to blend in with your profile or use colors to stand out and denote caution or warning.

Wire and Cable Management

Wire and cable management products improve safety by keeping your application clean, protected and organized. These products decrease the possibility of damage to wires, cables and tubes and can be quickly and easily installed into any project. The variety of options available provides flexibility in design and implementation.

- Wiring duct
- Wire housing & covers
- Cable tie mounting pad
- Cable and tube clip
- Cable tie mounting block
- Single and double tube clamps

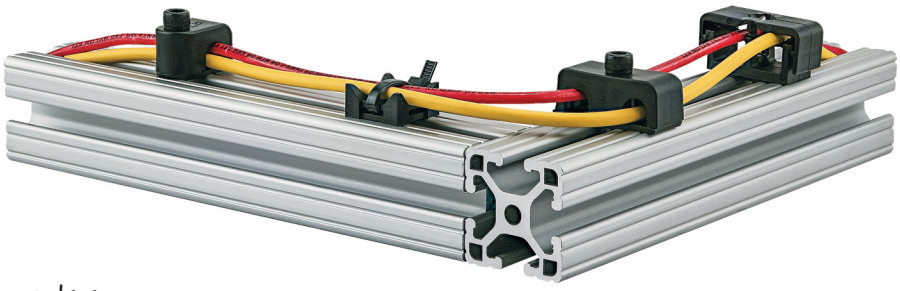

Tip: Wiring duct has interlocking ends so you can make the duct any customized length.

Storage and Organization

Storage and organization accessories come in a range of colors and sizes to accommodate your processes. Keep clutter at bay and streamline operations by incorporating these products into your application.

- Storage bins
- Slide-in tool hanger
- Mounting hooks
- Tool hanger spring hook
- Light-duty adhesive clamp
- Tool & Cup Holders
- Label holder

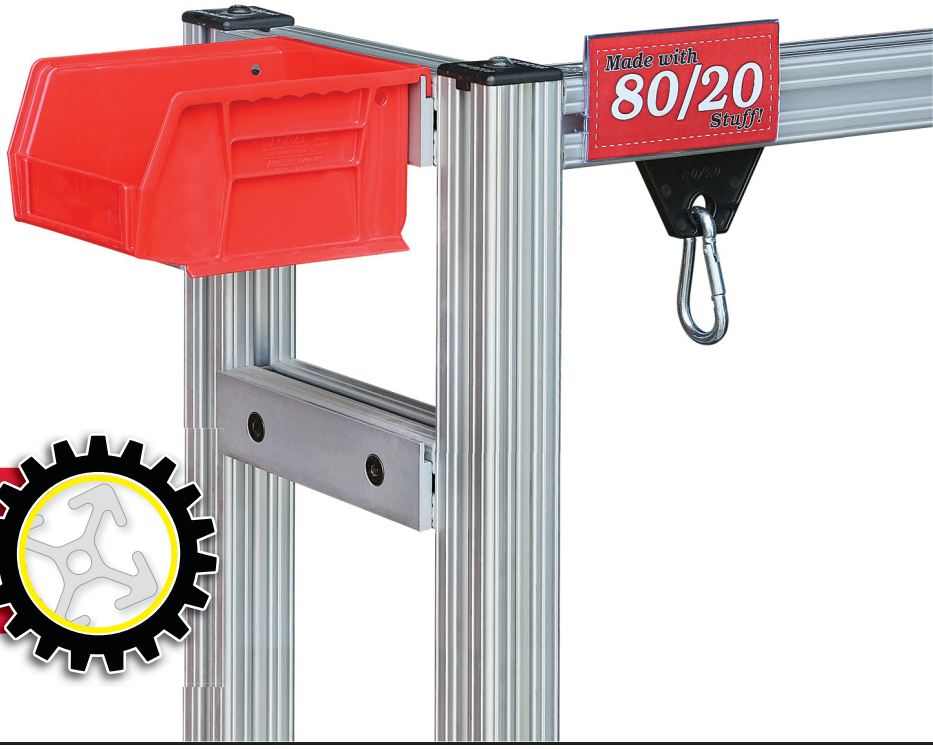

Important Note: Storage bins are mounted to a T-slot profile using storage bin hangers (see page 813).

That's Not All

Be sure to browse through all of the products to find everything you need to finish your project.

Part Description:

The end cap with push-in fastener adds a finishing touch to your project and closes off profile ends to limit dust and debris buildup. It can be installed with a push-in fastener, self-tapping screw (page 788) or into a tapped hole using a button head socket cap screw. Choose from black, red, blue, yellow or gray to color-coordinate with your application. The black end cap is available with or without the 80/20 logo, while the colored caps include the logo.

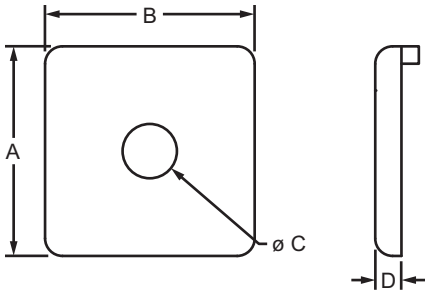

80/20 Black Cap	Red Cap	Blue Cap	Yellow Cap	Gray Cap	Black Cap	Series	A	B	C	D	Weight
2015	2015RED	2015BLU	2015YEL	2015GRA	2015-Plain	10	1.000"	1.000"	.257"	.125"	.008 lb
2025	2025RED	2025BLU	2025YEL	2025GRA	2025-Plain	10	1.000"	2.000"	.257"	.125"	.009 lb
2026	2026RED	2026BLU	2026YEL	2026GRA	2026-Plain	10	1.000"	3.000"	.257"	.125"	.013 lb
2028	2028RED	2028BLU	2028YEL	2028GRA	2028-Plain	10	2.000"	2.000"	.257"	.125"	.017 lb
2030	2030RED	2030BLU	2030YEL	2030GRA	2030-Plain	15	1.500"	1.500"	.328"	.188"	.013 lb
2045	2045RED	2045BLU	2045YEL	2045GRA	2045-Plain	15	1.500"	3.000"	.328"	.188"	.031 lb
2046	2046RED	2046BLU	2046YEL	2046GRA	2046-Plain	15	1.500"	4.500"	.328"	.188"	.049 lb
2050	2050RED	2050BLU	2050YEL	2050GRA	2050-Plain	15	3.000"	3.000"	.328"	.188"	.064 lb

80/20 Black Cap	Black Cap	Series	Material	Finish	Process	A	B	C	D	Weight
25-2015	25-2015-Plain	25	ABS	Matte	Molded	25.00mm	25.00mm	6.80mm	3.00mm	.0044 kg
25-2025	25-2025-Plain	25				25.00mm	50.00mm	6.80mm	3.00mm	.0068 kg
25-2028	25-2028-Plain	25				50.00mm	50.00mm	6.80mm	3.00mm	.0034 kg
40-2030	40-2030-Plain	40				40.00mm	40.00mm	8.40mm	4.50mm	.0068 kg
40-2045	40-2045-Plain	40				40.00mm	80.00mm	8.50mm	4.50mm	.0132 kg
40-2050	40-2050-Plain	40				80.00mm	80.00mm	8.50mm	4.50mm	.0282 kg

Push-In Fastener

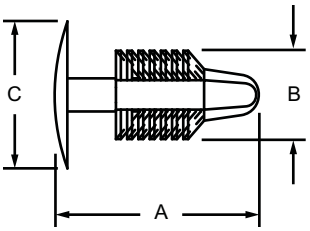

3272, 25-3272

3274, 40-3274

Black Cap	Red Cap	Blue Cap	Yellow Cap	Gray Cap	Series	Material	A	B	C	Weight
3272	3272RED	3272BLU	3272YEL	3272GRA	10	Plastic	.555"	.240"	.400"	.0004 lb
3274	3274RED	3274BLU	3274YEL	3274GRA	15		.895"	.300"	.700"	.0020 lb
25-3272	—	—	—	—	25		14.10mm	6.10mm	10.16mm	.0002 kg
40-3274	—	—	—	—	40		22.73mm	7.62mm	17.88mm	.0009 kg

End Cap with Push-In Fastener / Self Tapping End Cap Screw

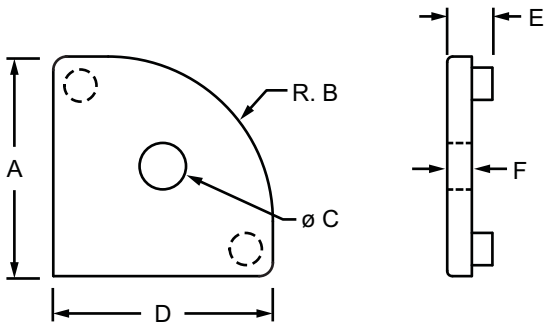

80/20 Black Cap	Red Cap	Blue Cap	Yellow Cap	Gray Cap	Black Cap	Series	A	B	C	D	E	F	Weight
2022	2022RED	2022BLU	2022YEL	2022GRA	2022-Plain	10	1.000"	.727"	.257"	1.000"	.213"	.125"	.004 lb
2035	2035RED	2035BLU	2035YEL	2035GRA	2035-Plain	15	1.500"	1.125"	.328"	1.500"	.283"	.188"	.016 lb
40-2033	—	—	—	—	—	40	40.00mm	30.00mm	8.45mm	40.00mm	8.25mm	4.50mm	.0073 kg

Material Specifications

Material	Finish	Process
ABS	Matte	Molded

Self Tapping End Cap Screw (STECS)

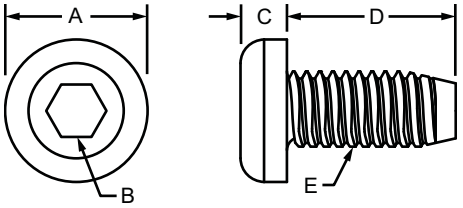

Part No.	Series	Material	Finish	A	B	C	D (Length)	E (Thread)	Weight
3766	10	Steel	Bright Zinc	.428"	.157"	.127"	.360"	12-24	.005 lb
3266	10		Black Zinc	.428"	.157"	.127"	.360"	12-24	.005 lb
3767	15		Bright Zinc	.428"	.157"	.127"	.360"	M7 x 1.0	.008 lb
3267	15		Black Zinc	.428"	.157"	.127"	.360"	M7 x 1.0	.008 lb
25-3766	25		Bright Zinc	10.90mm	4.00mm	3.23mm	9.12mm	12-24	.0025 kg
25-3266	25		Black Zinc	10.90mm	4.00mm	3.23mm	9.12mm	12-24	.0025 kg
40-3767	40		Bright Zinc	10.90mm	4.00mm	3.23mm	9.14mm	M7 x 1.0	.0037 kg
40-3267	40		Black Zinc	10.90mm	4.00mm	3.23mm	9.14mm	M7 x 1.0	.0037 kg

Part Description:

The end cap with molded push-in stem adds a finishing touch to your project and closes off profile ends to limit dust and debris buildup. It comes in black with molded push-in stems for easy installation.

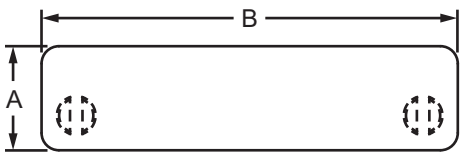

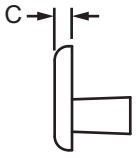

80/20 Black Cap	Plain Black Cap	Series	Color	Material	Finish	Process	A	B	C	Weight
2036	—	15	Black	ABS	Matte	Molded	.750"	1.500"	.125"	.006 lb
2037	—	15					.750"	3.000"	.125"	.010 lb
—	12305	20					20.00mm	20.00mm	2.50mm	.0009 kg
—	12306	20					20.00mm	40.00mm	2.50mm	.0021 kg
—	12307	20					40.00mm	40.00mm	2.50mm	.0041 kg
—	12271	30					30.00mm	30.00mm	4.00mm	.0038 kg
—	12302	30					30.00mm	60.00mm	4.00mm	.0034 kg
—	12303	30					60.00mm	60.00mm	4.00mm	.0154 kg
40-2035	40-2035-Plain	40					40.00mm	40.00mm	4.50mm	.0054 kg
—	12258	40					40.00mm	40.00mm	4.00mm	.0054 kg
—	12260	40					40.00mm	40.00mm	4.00mm	.0068 kg
—	12261	40					40.00mm	80.00mm	4.00mm	.0136 kg
—	12290	40					40.00mm	120.00mm	4.00mm	.0218 kg
—	12298	40					80.00mm	160.00mm	4.00mm	.0619 kg
—	12262	45					45.00mm	45.00mm	4.00mm	.0082 kg
—	12259	45					45.00mm	90.00mm	4.00mm	.0200 kg
—	12269	45					90.00mm	90.00mm	4.00mm	.0448 kg

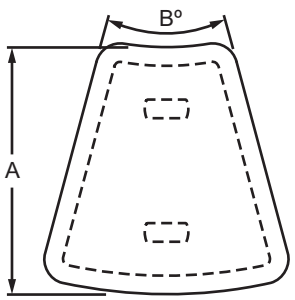

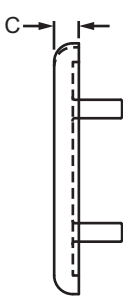

Black Cap	Series	Color	Material	Grade	Finish	Process	A	B	C	Weight
40-2037	40	Black	Nylon	PA6 GF30	Matte	Molded	40.00mm	30°	4.00mm	.0057 kg
40-2039	40						40.00mm	45°	4.00mm	.0084 kg
40-2043	40						40.00mm	60°	4.00mm	.0104 kg

Screw-On End Cap

Part Description:

The screw-on end cap uses a flat head socket cap screw that spreads the pin to secure the end cap and does not require a profile end tap. It adds a finishing touch to your project and closes off profile ends to limit dust and debris buildup. The suggested hardware can be found below.

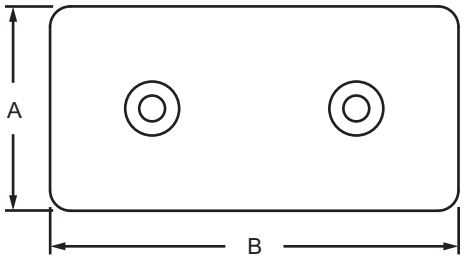

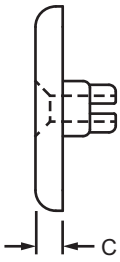

Black Cap	Series	Material	Grade	Finish	Process	A	B	C	Weight
12279	30	Nylon	PA6 GF30	Matte	Molded	30.00mm	60.00mm	4.00mm	.0073 kg
12283	45					45.00mm	45.00mm	4.00mm	.0088 kg
12286	45					45.00mm	90.00mm	4.00mm	.0174 kg
12287	45					90.00mm	90.00mm	4.00mm	.0345 kg

Suggested Hardware (Mount to Profile End)

Part No.	Series	Bolt	Qty.	Description
12279	30	11-4712	2	M4 x 12mm FHSCS
12283	45		1	
12286	45		2	
12287	45		4	

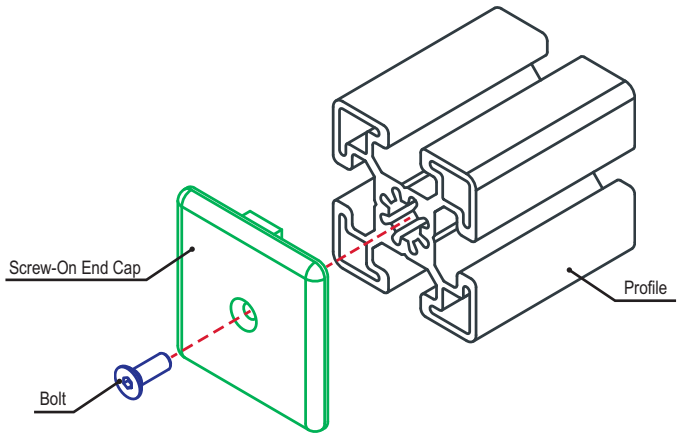

Part Description:

The 3 way – corner bracket cover cap is made of black nylon and used with the 3 way – triangular corner bracket (page 319) and the 3 way – rounded corner bracket (page 320) to add a layer of protection and an aesthetic appearance.

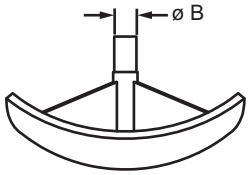

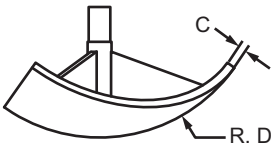

12043

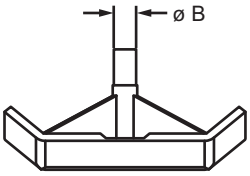

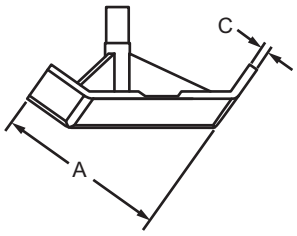

12044, 12047

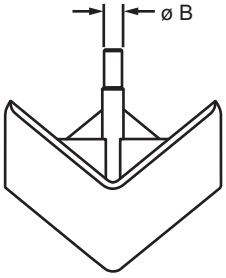

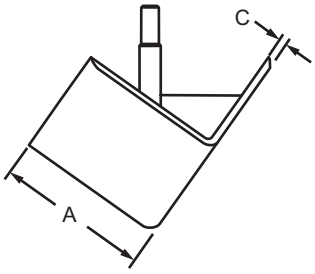

12041, 12045

Black Cap	Series	Material	Color	Connector	Profile	A	B	C	D	Weight
12043	15	Nylon	Black	14113	1517-LS, 1517	—	.197"	.079"	28.6°	.021 lb
12044	15			14113	1547	1.490"	.197"	.079"	—	.030 lb
12041	30			14112	30-3030	30.00mm	4.20mm	2.00mm	—	.0086 kg
12047	40			14114	40-4045-Lite	40.00mm	5.00mm	2.00mm	—	.0077 kg
12045	40			14114	40mm x 40mm Profiles	40.00mm	5.00mm	2.00mm	—	.0154 kg

Ready Tube End Cap

The Ready Tube® end cap adds a finishing touch to your project and closes off profile ends to limit dust and debris buildup. It has a molded push-in stem for easy installation.

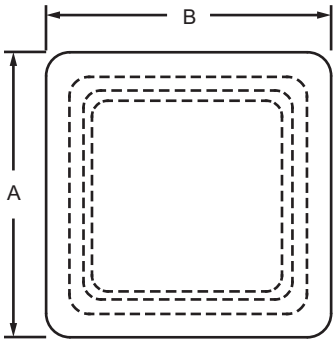

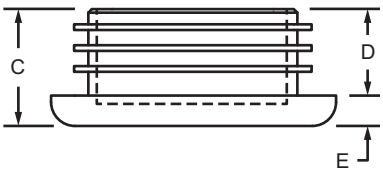

80/20 Black Cap	Black Cap	Series	Material	Process	A	B	C	D	E	Weight
9755	9755-Plain	RT	Low Density Polyethylene	Injection Molded	1.500"	1.500"	.615"	.455"	.160"	.015 lb

Quick Frame End Cap

The Quick Frame® end cap adds a finishing touch to your project and closes off profile ends to limit dust and debris buildup. It is available in black or gray and pushes into Quick Frame profiles for easy installation.

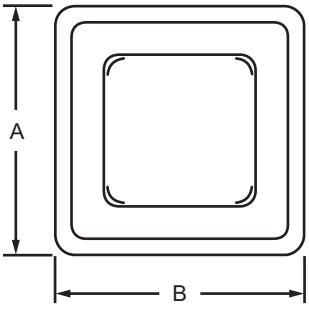

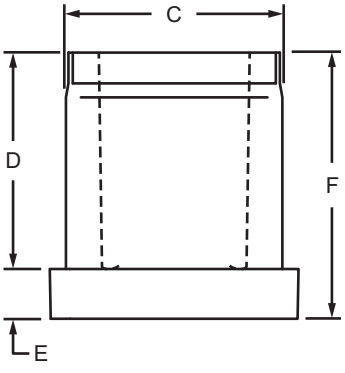

Part No.	Series	Material	Grade	Process	Color	A	B	C	D	E	F	Weight
9110	QF	Plastic	Nylon	Injection Molded	Gray	1.000"	1.000"	.850"	.870"	.200"	1.070"	.020 lb
9210	QF				Black	1.000"	1.000"	.850"	.870"	.200"	1.070"	.020 lb

Part Description:

The aluminum T-slot cover is available in black or clear anodize for 15 and 40-series profiles. It prevents dust and debris build up, covers wires and tubes in the T-slot channel, and adds a great finishing touch that blends into projects for a polished look.

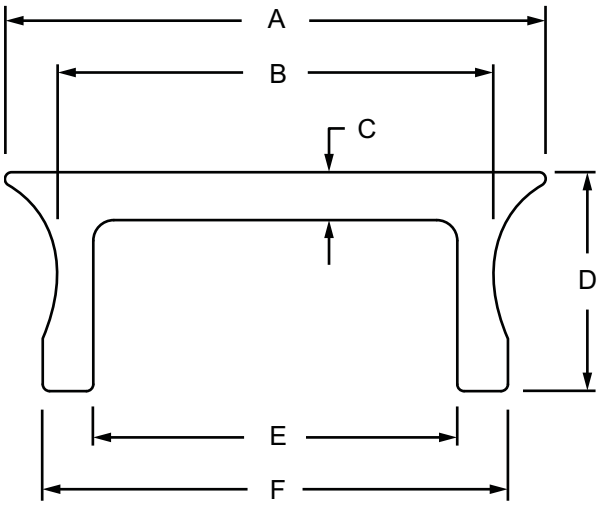

Part No.	Series	Color	A	B	C	D	E	F	Stock Length	Weight
2119	15	Clear	.395"	.319"	.035"	.160"	.266"	.340"	72.500"	.002 lb / in.
2119-Black	15	Black	.395"	.319"	.035"	.160"	.266"	.340"		.002 lb / in.
40-2119	40	Clear	10.02mm	8.11mm	.89mm	4.06mm	6.76mm	8.64mm	1841.50mm	.06758 kg / mm
40-2119-Black	40	Black	10.02mm	8.11mm	.89mm	4.06mm	6.76mm	8.64mm		.06758 kg / mm

Material Specifications

Material	Alloy*	Finish	Process
Aluminum	6105-T5	Anodize	Extruded

* Or comparable

Required Machining Services

Machining Type	Part Machined	Reference Page
Cut to Length	T-slot Cover	860

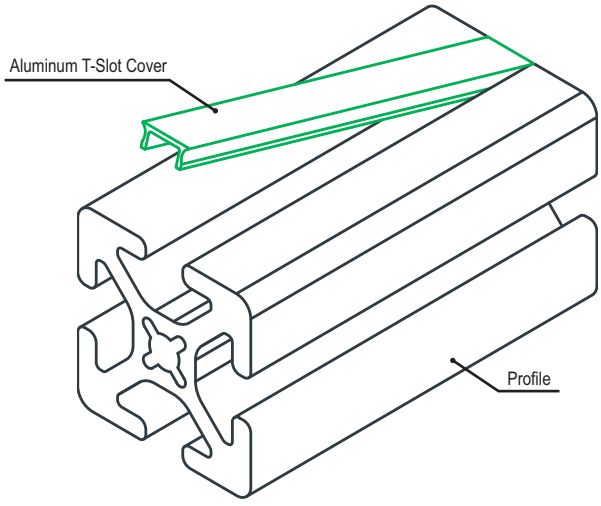

Standard T-Slot Cover

Part Description:

The standard T-slot cover is more rigid for heavy use applications. It adds a finishing touch and polished look to an application. It prevents dust and debris build up and covers wires and tubes in the T-slot channel. There are options available in black, gray, or safety yellow. **Tip:** Use a soft faced mallet (page 914) to tap the cover into the T-slot.

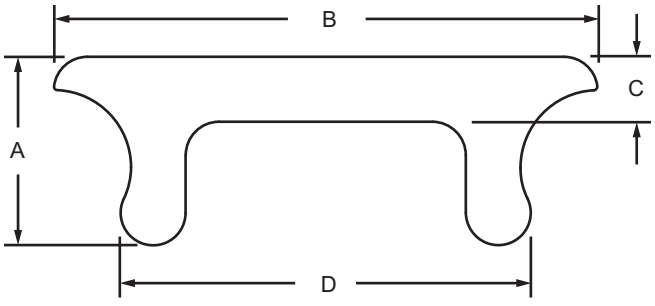

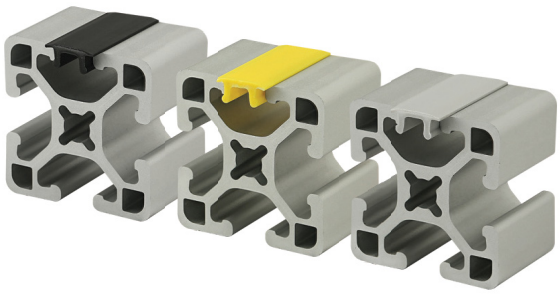

Part No.	Series	Color	Material	Finish	Process	A	B	C	D	Stock Length	Weight
2112	10	Yellow	PVC	Matte	Extruded	.102"	.338"	.035"	.266"	72.500"	.059 lb
2113	10	Black				.102"	.338"	.035"	.266"		.059 lb
2114	10	Gray				.102"	.338"	.035"	.266"		.059 lb
2109	15	Yellow	Polypropylene			.222"	.484"	.060"	.350"		.099 lb
2110	15	Black				.222"	.484"	.060"	.350"		.111 lb
2111	15	Gray				.222"	.484"	.060"	.350"		.106 lb
25-2112	25	Yellow	PVC			2.59mm	8.59mm	.89mm	6.76mm	1841.50mm	.0268 kg
25-2113	25	Black				2.59mm	8.59mm	.89mm	6.76mm		.0245 kg
25-2114	25	Gray				2.59mm	8.59mm	.89mm	6.76mm		.0268 kg
40-2109	40	Yellow	Polypropylene			5.64mm	12.29mm	1.52mm	8.89mm		.0481 kg
40-2110	40	Black				5.64mm	12.29mm	1.52mm	8.89mm		.0490 kg
40-2111	40	Gray				5.64mm	12.29mm	1.52mm	8.89mm		.0485 kg

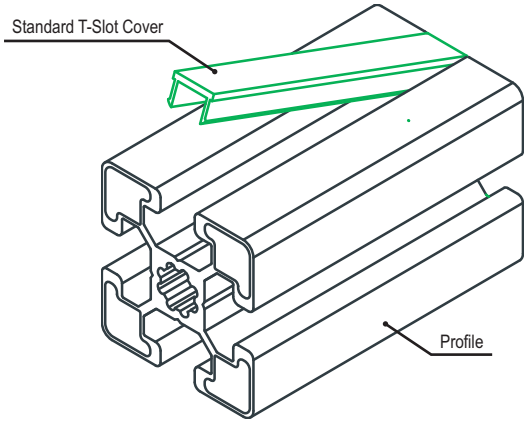

Part Description:

The economy T-slot cover is a cost-effective way to add a finishing touch and polished look to an application. It prevents dust and debris build up and covers wires and tubes in the T-slot channel. There are options available in black, gray, clear, red, blue, orange, or safety yellow. **Tip:** Use a soft faced mallet (page 914) to tap the cover into the T-slot.

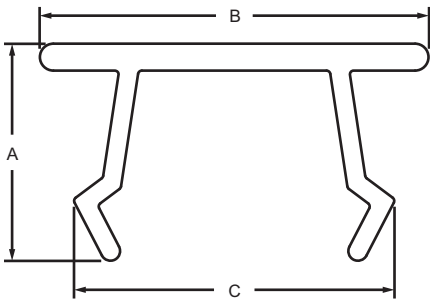

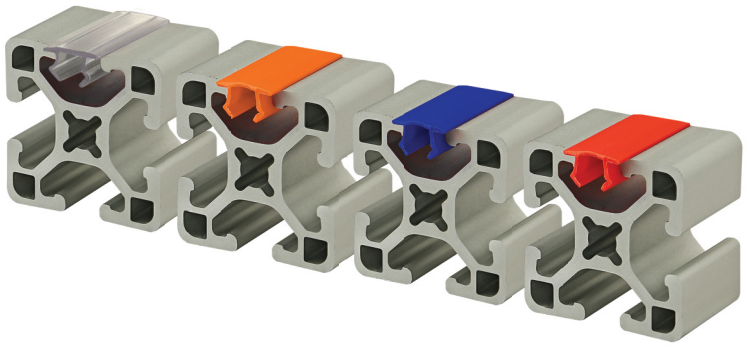

Part No.	Series	Color	Material	Finish	Process	A	B	C	Stock Length	Weight
2819	10	Yellow	PVC	Matte	Extruded	.211"	.430"	.313"	72.500"	.080 lb
2820	10	Black				.211"	.430"	.313"		.083 lb
2821	10	Gray				.211"	.430"	.313"		.076 lb
2818	10	Red				.211"	.430"	.313"		.098 lb
2817	10	Blue				.211"	.430"	.313"		.080 lb
2816	10	Orange				.211"	.430"	.313"		.091 lb
2822	15	Yellow				.282"	.505"	.416"		.131 lb
2823	15	Black				.282"	.505"	.416"		.133 lb
2824	15	Gray				.282"	.505"	.416"		.126 lb
2825	15	Red				.282"	.505"	.416"		.124 lb
2826	15	Blue				.282"	.505"	.416"		.126 lb
2827	15	Orange				.282"	.505"	.416"		.127 lb
2871	15 40	Clear				.283"	.505"	.416"		.126 lb
25-2819	25	Yellow				5.36mm	10.92mm	7.95mm	1841.50mm	.0354 kg
25-2820	25	Black				5.36mm	10.92mm	7.95mm		.0363 kg
25-2821	25	Gray				5.36mm	10.92mm	7.95mm		.0360 kg
25-2818	25	Red				5.36mm	10.92mm	7.95mm		.0443 kg
25-2817	25	Blue				5.36mm	10.92mm	7.95mm		.0386 kg
25-2816	25	Orange				5.36mm	10.92mm	7.95mm		.0411 kg
40-2822	40	Yellow				7.16mm	12.83mm	10.57mm		.0549 kg
40-2823	40	Black				7.16mm	12.83mm	10.57mm		.0467 kg
40-2824	40	Gray				7.16mm	12.83mm	10.57mm		.0521 kg
40-2825	40	Red				7.16mm	12.83mm	10.57mm		.0544 kg
40-2826	40	Blue				7.16mm	12.83mm	10.57mm		.0579 kg
40-2827	40	Orange				7.16mm	12.83mm	10.57mm		.0602 kg
14108	45	Yellow	Polypropylene			7.37mm	11.61mm	11.58mm	2000.00mm	.0514 kg
14107	45	Black				7.37mm	11.61mm	11.58mm		.0514 kg
14110	45	Gray				7.37mm	11.61mm	11.58mm		.0514 kg
14123	45	Red				7.37mm	11.61mm	11.58mm		.0514 kg
14121	45	Blue				7.37mm	11.61mm	11.58mm		.0514 kg

Reduction T-Slot Cover

Part Description:

The reduction T-slot cover slopes inward to create a flat surface and adds a finishing look while preventing dust and debris build up. It covers wires and tubes in the T-slot channel. It can also be used as panel gasket.
Tip: Use a soft faced mallet (page 914) to tap the cover into the T-slot.

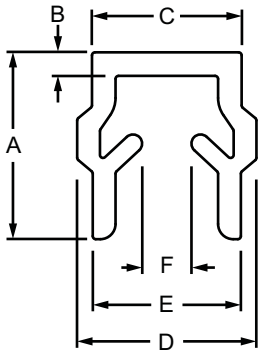

12004

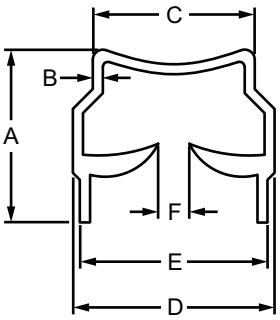

12003 & 14193

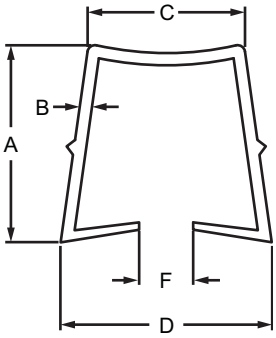

12013

Part No.	Series	Color	A	B	C	D	E	F	Stock Length	Gasket Panel Thickness	Weight
12004	20	Black	6.25mm	.79mm	5.00mm	6.00mm	4.95mm	1.65mm	2M	1 - 4mm	.0163 kg
12003	10 25		9.00mm	.60mm	6.10mm	7.30mm	6.40mm	.70mm		1 - 4mm	.0427 kg
14193	30		8.76mm	.51mm	8.20mm	10.21mm	9.50mm	1.57mm		4 - 6mm	.0358 kg
12013	45		12.80mm	.79mm	10.21mm	13.69mm	—	3.51mm		2 - 6mm	.0548 kg

Material Specifications

Material	Finish	Process
Polypropylene	Matte	Extruded

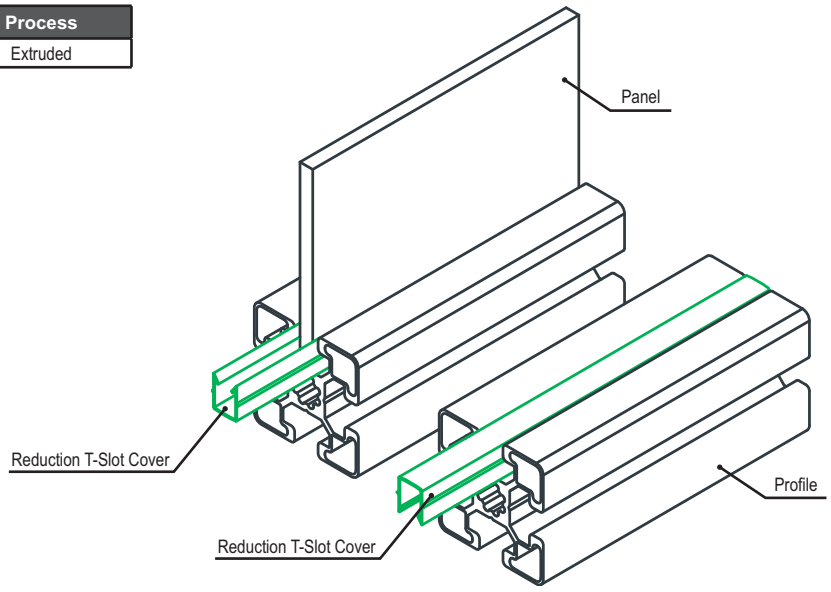

Part Description:

The rubber T-slot cover prevents dust and debris buildup, covers wires in the T-slot channel, and adds an extra layer of protection to applications. It rolls into the T-slot, making it easy to assemble.

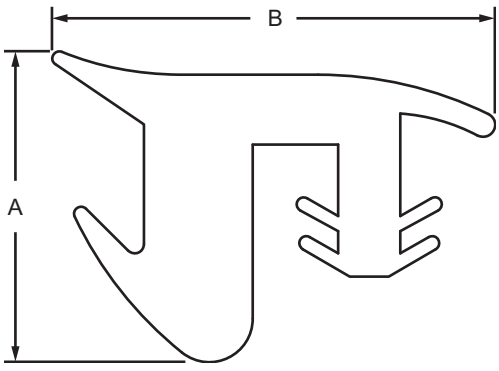

Part No.	Series	Material	Color	A	B	Length	Weight
2876	15	Rubber	Black	.400"	.570"	per foot	.042 lb / ft
2877	15			.400"	.570"	per 150 foot roll	6.315 lb
40-2876	40			10.16mm	14.48mm	per meter	.0637 kg / m
40-2877	40			10.16mm	14.48mm	per 45.7 meter roll	2.8654 kg

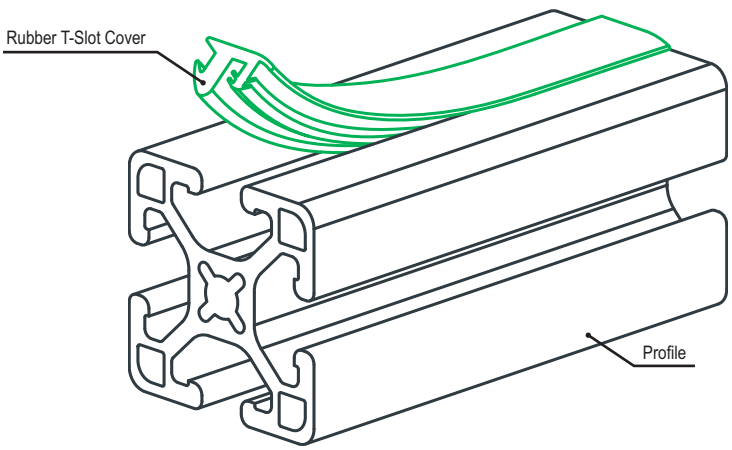

Tread Strip

Part Description:

The tread strip fits into a T-slot channel and provides an anti-slip ribbed surface. It has a key pad that presses into a T-slot and is commonly used for adding traction on steps or as padding for doors. Tread strip is sold by the foot or meter.

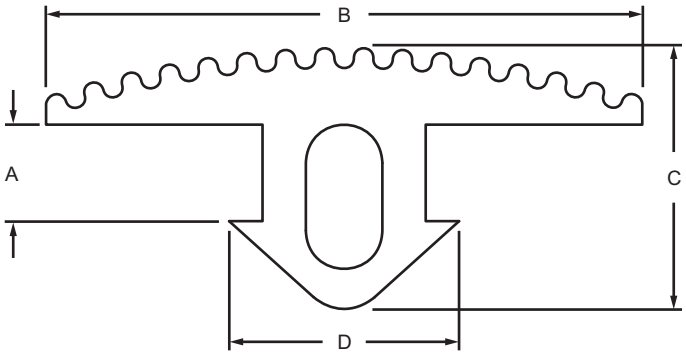

Part No.	Series	Material	Color	A	B	C	D	Max Length	Weight
2828	10	TPV	Black	.110"	.875"	.398"	.375"	150 Feet	.055 lb / ft
25-2828	25			2.79mm	22.23mm	10.11mm	9.53mm	45 Meters	.0819 kg / m
12006	15 40			5.03mm	31.09mm	13.59mm	11.99mm	20 Meters	.1255 kg / m

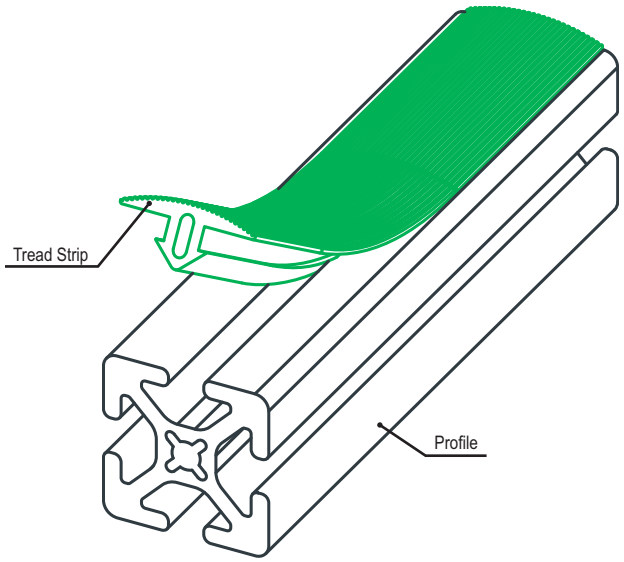

Part Description:

The wire housing is commonly used to organize wires, cables, and tubes. It can be integrated into new or existing applications. The housing makes it easy to place and remove wires simply by removing the wire housing cover (see page 800). It has breakaway fingers that snap off to accommodate large wire groupings. The wire housing is available in gray or black.

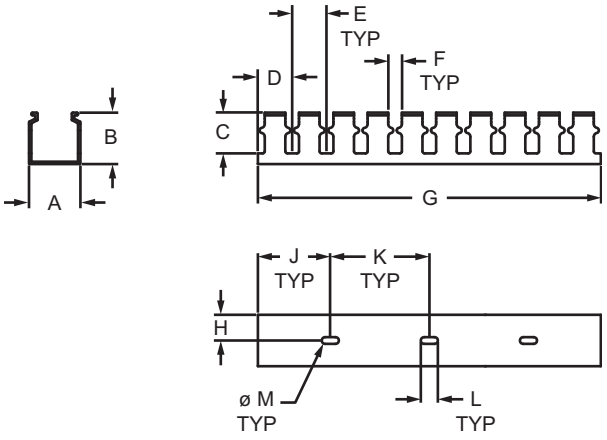

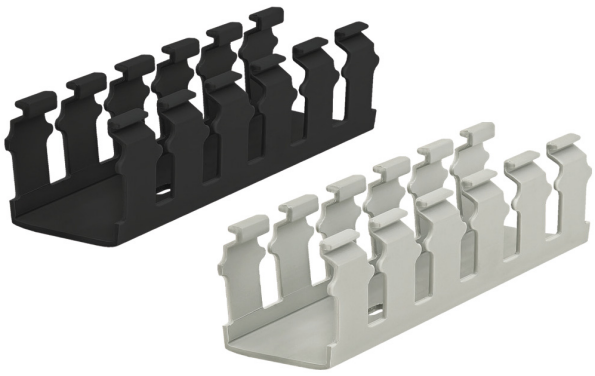

Part No.	Series	Material	Color	A	B	C	D	E	F	G	H	J	K	L	M	Weight
13197	10 15	PVC	Black	1.500"	1.502"	1.190"	1.000"	1.000"	.400"	72.000"	.750"	2.000"	4.000"	.500"	.195"	.885 lb
13199	25 30 40 45		Gray	1.500"	1.502"	1.190"	1.000"	1.000"	.400"	72.000"	.750"	2.000"	4.000"	.500"	.195"	.885 lb

Suggested Hardware (Mount to T-Slot)

Series	Part No.	Qty.*	Bolt	Part No.	Qty.*	T-Nut
10	3042	1	10-32 x .375" BHSCS	3205	1	Slide-in
15	3050	1	10-32 x .500" BHSCS	3201	1	Slide-in
25	11-5310	1	M5 x 10mm BHSCS	25-1954	1	Slide-in
30	11-5312	1	M5 x 12mm BHSCS	13115	1	Drop-in
40	11-5312	1	M5 x 12mm BHSCS	3871	1	Slide-in
45	11-5316	1	M5 x 16mm BHSCS	13127	1	Drop-in

* Suggested hardware quantity is per hole. Stock length suggested quantity is 9, utilizing every other hole.

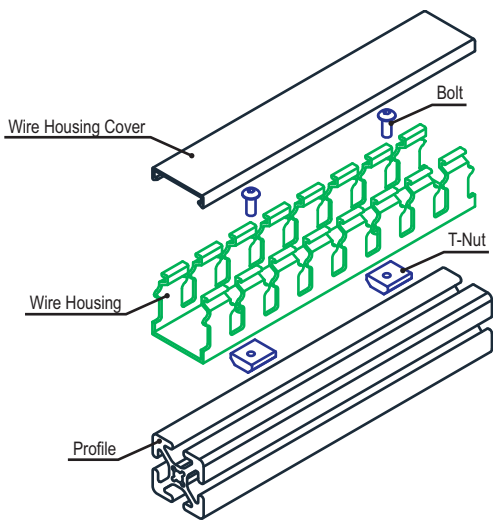

Wire Housing Cover

Part Description:

The wire housing cover is commonly used with the wire housing (see page 799) for wire and cable storage and organization. It keeps dirt and debris out while retaining wires in the housing. The wire housing cover is available in gray or black.

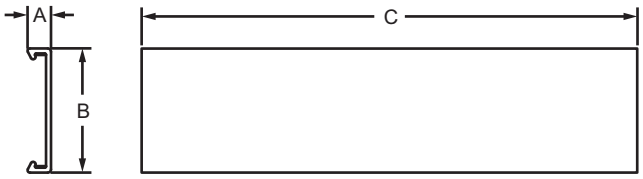

Part No.	Series	Material	Color	A	B	C	Weight
13198	10 15	Rigid PVD Flexible PVC	Black	.283"	1.500"	72.000"	.385 lb
13200	25 30 40 45		Gray	.283"	1.500"	72.000"	.385 lb

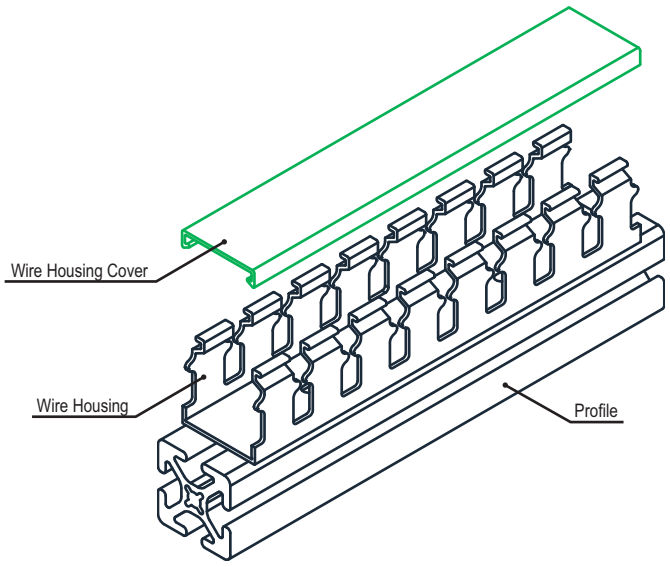

Part Description:

Wiring duct is commonly used to organize wires, cables, and tubes. It is reusable and easy to integrate into new or existing applications. The strips include overlapping fingers with no sharp edges that interlock for end-to-end attachment to enable easy access to wires with no need for a separate cover.

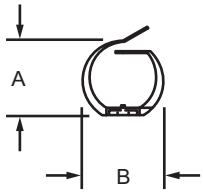

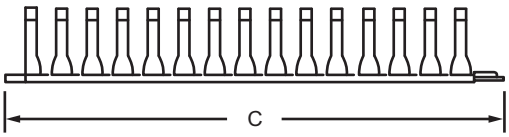

Part No.	Series	Material	Finish	Process	Color	A	B	C	Weight
2899	10 15	Plastic	Matte	Molded	Medium Gray	1.370"	1.320"	20.500"	.136 lb
65-2899	25 30 40 45					34.80mm	33.53mm	520.70mm	.0615 kg

Suggested Hardware (Mount to T-Slot)

Part No.	Series	Qty.	Bolt	T-Nut
3426	10	4	10-32 x .375" BHSCS	Slide-In
3487	15	4	10-32 x .500" BHSCS	Slide-In
11-5310	25	4	M5 x 10mm BHSCS	—
25-1954		4	—	Slide-In
11-5312	30	4	M5 x 12mm BHSCS	—
13115		4	—	Drop-In
75-3539	40	4	M5 x 12mm BHSCS	Slide-In
11-5316	45	4	M5 x 16mm BHSCS	—
13127		4	—	Drop-In

Cable Tie

Part Description:

The cable tie is used to organize wires, cables, and tubes. It has a high tensile strength. Cable ties are sold in packages of 100.

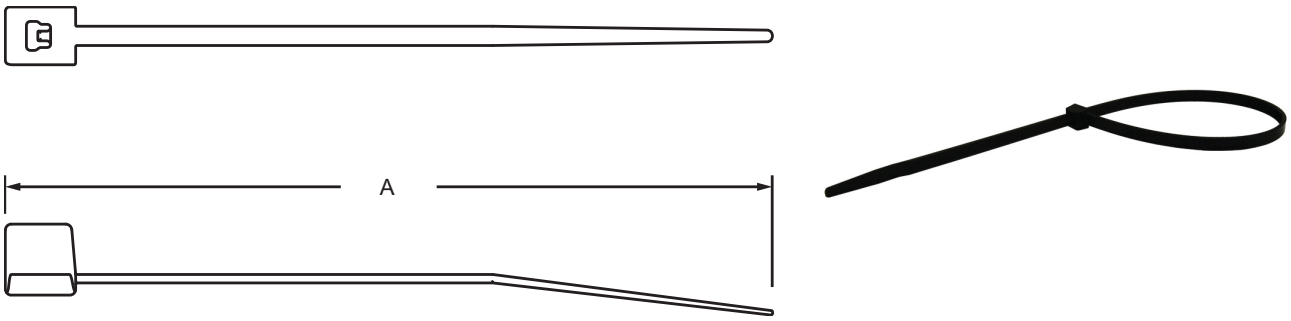

Part No.	Series	Material	Finish	Process	Color	A	Weight
2890	F M	Nylon	Matte	Molded	Black	6.000"	.001 lb
2891	F M					8.000"	.001 lb
2892	F M					11.000"	.004 lb

Part Description:

The cable tie mounting pad is used to mount cable ties (page 802) for wire and cable management and organization. There are options available with a self-adhesive backing. All cable tie mounting pads are sold in packs of 100.

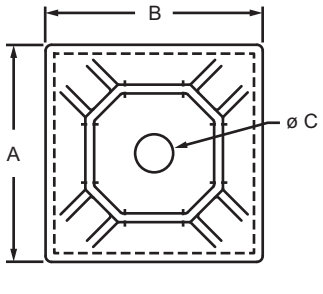

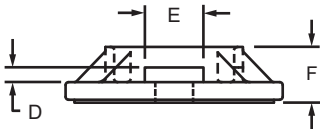

Part No.	Series	Material	Finish	Process	Color	A	B	C	D	E	F	Weight
2893*	10 15 20 25 30 40 45	Nylon	Matte	Molded	Black	.740"	.740"	.130"	.050"	.200"	.190"	.002 lb
2894*	10 15 25 30 40 45					.990"	.990"	.215"	.060"	.200"	.200"	.003 lb

* Includes a self-adhesive backing.

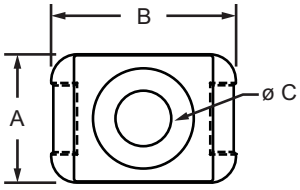

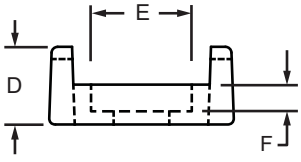

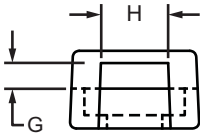

Part No.	Series	Material	Finish	Process	Color	A	B	C	D	E	F	G	H	Weight
2895	10 15 25 30 40 45	Nylon	Matte	Molded	Black	.628"	.898"	.270"	.380"	.490"	.130"	.125"	.328"	.003 lb

Suggested Hardware (Mount to T-Slot)

Series	Part No.	Qty.	Bolt	Part No.	Qty.	T-Nut
10 25	3059	1	1/4-20 x 3/8" BHSCS	3382	1	Slide-In Economy
15	3061	1	1/4-20 x 1/2" BHSCS	3382	1	Slide-In Economy
30	11-6310	1	M6 x 10mm BHSCS	13117	1	M6 Drop-In
40	11-6310	1	M6 x 10mm BHSCS	13119	1	M6 Drop-In
45	11-6314	1	M6 x 14mm BHSCS	13129	1	M6 Drop-In

Drop-In Cable & Tube Clip

Part Description:

The drop-in cable and tube clip is used to organize cables, wires, and tubes without the need for cable ties. It is a reusable option that has a snap cover which adds an extra layer of protection and can be opened and closed repeatedly. The pad key allows it to easily drop into a T-slot channel even when ends are closed off. The drop-in cable and tube clip twists into the T-slot to lock in place.

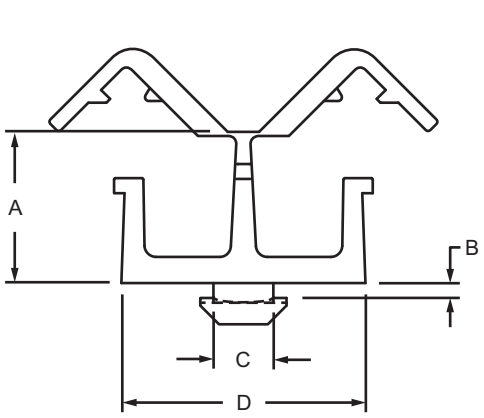

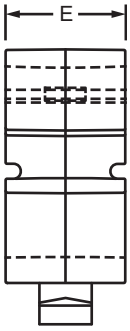

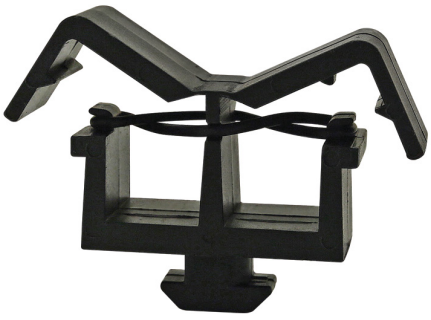

Part No.	Series	A	B	C	D	E	Weight
12321	30	20.20mm	2.00mm	8.00mm	32.33mm	16.00mm	.0066 kg
12319	15 40	20.20mm	4.50mm	8.00mm	32.33mm	16.00mm	.0077 kg
12320	45	20.20mm	8.00mm	10.00mm	32.33mm	16.00mm	.0064 kg

Material Specifications

Material	Grade	Finish	Process	Color
Nylon	PA6 GF30	Matte	Molded	Black

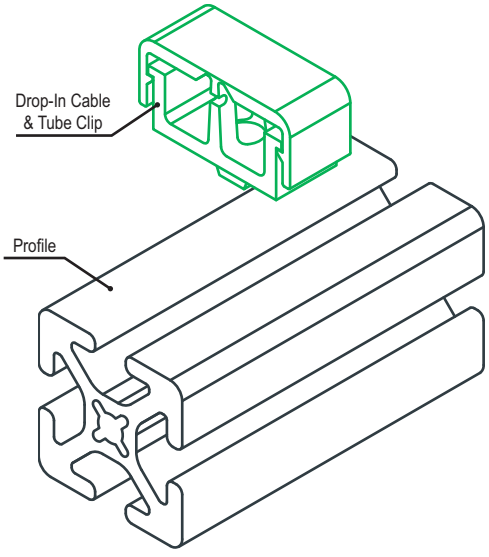

Part Description:

The cable and tube clip is used to organize cables, wires, and tubes without the need for cable ties. It is a reusable option that has a snap cover which adds an extra layer of protection and can be opened and closed repeatedly. The cable clip mounts to a T-slot profile; see the suggested hardware below.

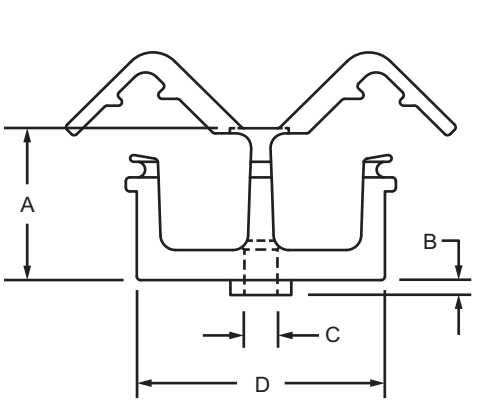

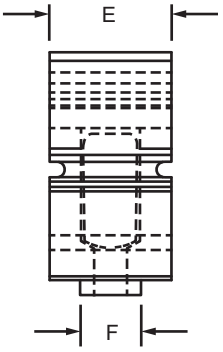

Part No.	Series	A	B	C	D	E	F	Weight
12026	15 30 40	20.20mm	2.00mm	4.30mm	32.60mm	16.00mm	8.00mm	.0100 kg
12027	45	20.20mm	2.00mm	4.30mm	32.60mm	16.00mm	10.00mm	.0077 kg

Material Specifications

Material	Grade	Finish	Process	Color
Nylon	PA6 GF30	Matte	Molded	Black

Suggested Hardware (Mount to T-Slot)

Part No.	Series	Qty.	Bolt	T-Nut
11-4512*	15 30 40	1	M4 x 12mm SHCS	—
13113*		1	—	Drop-In
75-3563	45	1	M4 x 12mm SHCS	Drop-In

*15, 30, and 40 series suggested hardware includes both part number 11-4512 & 13113.

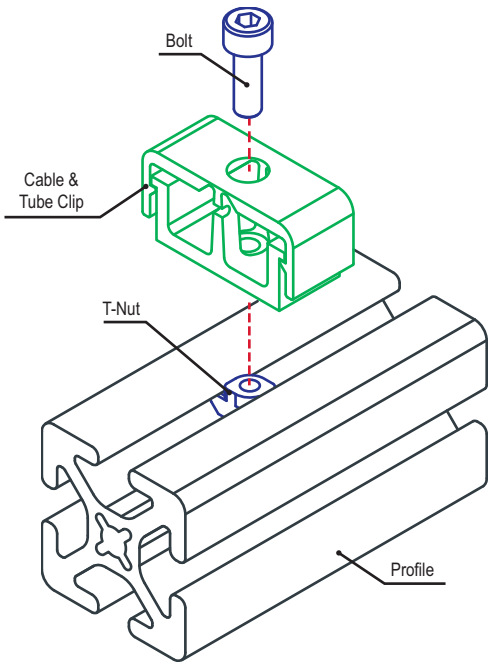

Cable Tie Mounting Block

Part Description:

The cable tie mounting block is used to organize cables, wires, and tubes. It is a reusable option that allows cable ties to be attached in two directions. The pad key allows it to easily drop into a T-slot channel even when ends are closed off. The cable tie mounting block twists into the T-slot to lock in place.

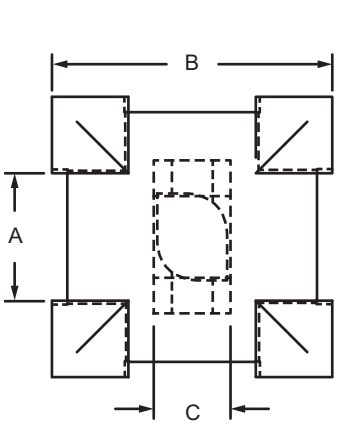

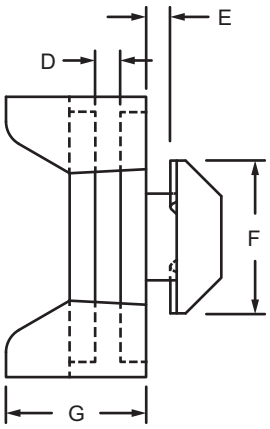

Part No.	Series	A	B	C	D	E	F	G	Weight
12314	10 25	10.00mm	22.00mm	6.00mm	2.00mm	1.90mm	12.00mm	11.00mm	.0036 kg
12317	30	10.00mm	22.00mm	7.00mm	2.00mm	2.54mm	14.00mm	11.00mm	.0036 kg
12316	15 40	10.00mm	22.00mm	8.00mm	2.00mm	4.29mm	16.00mm	11.00mm	.0045 kg
12315	45	10.00mm	22.00mm	10.00mm	2.00mm	5.80mm	18.00mm	11.00mm	.0044 kg

Material Specifications

Material	Grade	Finish	Process	Color
Nylon	PA6 GF30	Matte	Molded	Black

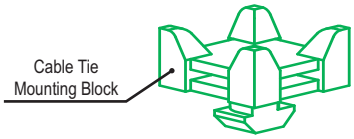

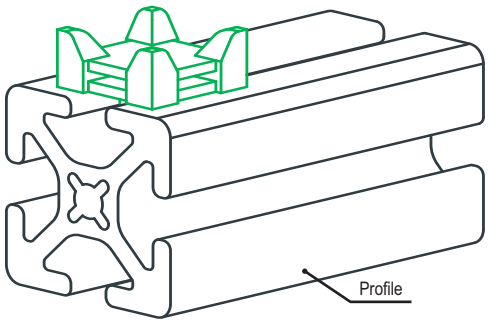

Part Description:

The single cable and tube clamp has one clamp channel to organize a tube, wire, or cable and attaches easily to a T-slot profile. It is made of black polypropylene which is durable, long-lasting, and resists oil, chemicals, and acids, making it ideal in industrial settings. The stackable design provides a space-saving method to organize multiple wires.

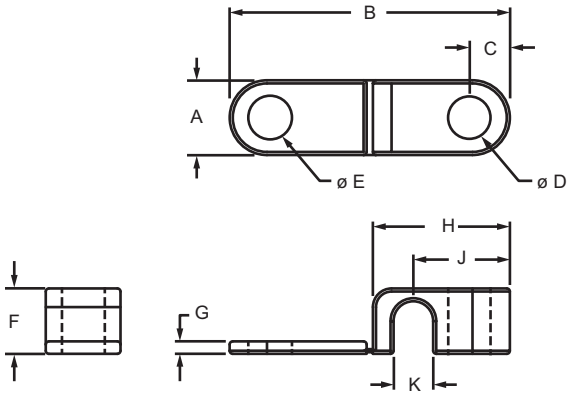

Part No.	Series	Material	Finish	Process	A	B	C	D	E	F	G	H	J	K	Weight
2500	10 15	Polypropylene	Black Matte	Molded	.472"	1.772"	.256"	.268"	.276"	.413"	.079"	.866"	.610"	.126"	.004 lb
2501	10 15				.472"	1.772"	.256"	.268"	.276"	.413"	.079"	.866"	.610"	.250"	.003 lb
2502	10 15				.630"	2.165"	.276"	.268"	.276"	.591"	.079"	1.063"	.709"	.374"	.007 lb
2503	10 15				.787"	2.717"	.276"	.268"	.276"	.886"	.079"	1.339"	.866"	.500"	.015 lb
2504	10 15				.787"	3.346"	.276"	.268"	.276"	1.181"	.079"	1.654"	1.024"	.748"	.022 lb
2505	10 15				.787"	3.346"	.276"	.268"	.276"	1.181"	.079"	1.654"	1.024"	1.000"	.021 lb
65-2500	25 40				12.00mm	45.00mm	6.50mm	6.80mm	7.00mm	10.50mm	2.00mm	22.00mm	15.50mm	3.20mm	.0017 kg
65-2501	25 40				12.00mm	45.00mm	6.50mm	6.80mm	7.00mm	10.50mm	2.00mm	22.00mm	15.50mm	6.35mm	.0015 kg
65-2502	25 40				16.00mm	55.00mm	7.00mm	6.80mm	7.00mm	15.00mm	2.00mm	27.00mm	18.00mm	9.50mm	.0033 kg
65-2503	25 40				20.00mm	69.00mm	7.00mm	6.80mm	7.00mm	22.50mm	2.00mm	34.00mm	22.00mm	12.70mm	.0068 kg
65-2504	25 40				20.00mm	85.00mm	7.00mm	6.80mm	7.00mm	30.00mm	2.00mm	42.00mm	26.00mm	19.00mm	.0099 kg
65-2505	25 40				20.00mm	85.00mm	7.00mm	6.80mm	7.00mm	30.00mm	2.00mm	42.00mm	26.00mm	25.40mm	.0091 kg

Suggested Hardware (Mount to T-Slot)

Part No.	Bolt Assy.	Qty.	Bolt	T-Nut
2500	3304	1	1/4-20 x 3/4" SHCS	Economy
2501	3304	1	1/4-20 x 3/4" SHCS	
2502	3306	1	1/4-20 x 1.0" SHCS	
2503	3307	1	1/4-20 x 1.25" SHCS	
2504	3308	1	1/4-20 x 1.50" SHCS	
2505	3308	1	1/4-20 x 1.50" SHCS	
65-2500	75-3414	1	M6 x 20mm SHCS	
65-2501	75-3415	1	M6 x 25mm SHCS	
65-2502	75-3415	1	M6 x 25mm SHCS	
65-2503	75-3416	1	M6 x 30mm SHCS	
65-2504	75-3418	1	M6 x 40mm SHCS	
65-2505	75-3418	1	M6 x 40mm SHCS	

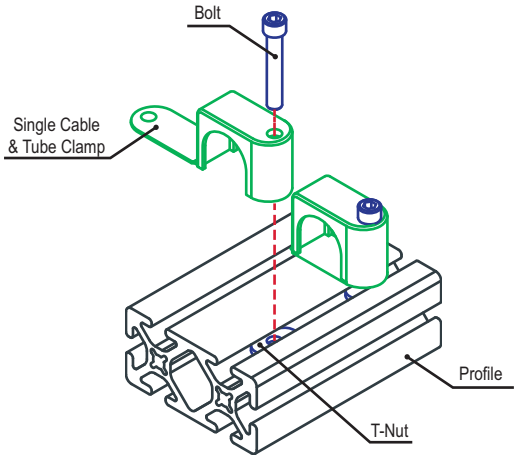

Double Cable & Tube Clamp

Part Description:

The double cable and tube clamp has two clamp channels to organize tubes, wires, and cables and attaches easily to a T-slot profile. It is made of black polypropylene which is durable, long-lasting, and resists oil, chemicals, and acids, making it ideal in industrial settings. The stackable design provides a space-saving method to organize multiple wires.

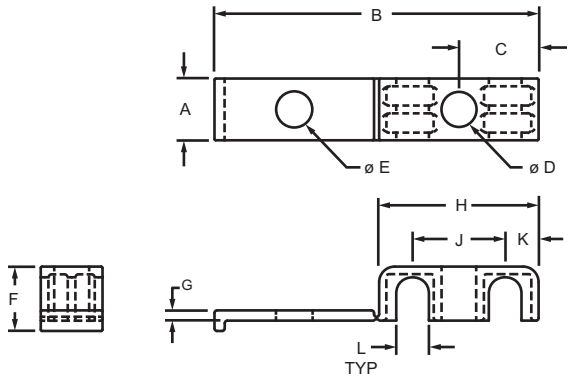

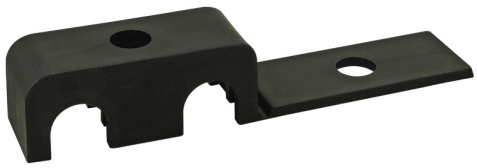

Part No.	Series	Material	Finish	Process	A	B	C	D	E	F	G	H	J	K	L	Weight
2506	10 15	Polypropylene	Black Matte	Molded	.472"	2.480"	.610"	.268"	.276"	.413"	.079"	1.220"	.709"	.256"	.126"	.005 lb
2507	10 15				.472"	2.480"	.610"	.268"	.276"	.413"	.079"	1.220"	.709"	.256"	.250"	.005 lb
2508	10 15				.630"	3.110"	.768"	.268"	.276"	.591"	.079"	1.535"	.866"	.335"	.374"	.009 lb
2509	10 15				.787"	4.213"	1.043"	.268"	.276"	.886"	.079"	2.087"	1.181"	.453"	.500"	.022 lb
2510	10 15				.787"	5.551"	1.378"	.268"	.276"	1.181"	.079"	2.756"	1.496"	.630"	.748"	.034 lb
2511	10 15				.787"	5.551"	1.378"	.268"	.276"	1.181"	.079"	2.756"	1.496"	.630"	1.000"	.026 lb
65-2506	25 40				12.00mm	63.00mm	15.50mm	6.80mm	7.00mm	10.50mm	2.00mm	31.00mm	18.00mm	6.50mm	3.20mm	.0024 kg
65-2507	25 40				12.00mm	63.00mm	15.50mm	6.80mm	7.00mm	10.50mm	2.00mm	31.00mm	18.00mm	6.50mm	6.35mm	.0023 kg
65-2508	25 40				16.00mm	79.00mm	19.50mm	6.80mm	7.00mm	15.00mm	2.00mm	39.00mm	22.00mm	8.50mm	9.50mm	.0043 kg
65-2509	25 40				20.00mm	107.00mm	26.50mm	6.80mm	7.00mm	22.50mm	2.00mm	53.00mm	30.00mm	11.50mm	12.70mm	.0099 kg
65-2510	25 40				20.00mm	141.00mm	35.00mm	6.80mm	7.00mm	30.00mm	2.00mm	70.00mm	38.00mm	16.00mm	19.00mm	.0154 kg
65-2511	25 40				20.00mm	141.00mm	35.00mm	6.80mm	7.00mm	30.00mm	2.00mm	70.00mm	38.00mm	16.00mm	25.40mm	.0117 kg

Suggested Hardware (Mount to T-Slot)

Part No.	Bolt Assy.	Qty.	Bolt	T-Nut
2506	3304	1	1/4-20 x 3/4" SHCS	Economy
2507	3305	1	1/4-20 x 7/8" SHCS	
2508	3306	1	1/4-20 x 1.0" SHCS	
2509	3307	1	1/4-20 x 1.25" SHCS	
2510	3308	1	1/4-20 x 1.50" SHCS	
2511	3308	1	1/4-20 x 1.50" SHCS	
65-2506	75-3414	1	M6 x 20mm SHCS	
65-2507	75-3414	1	M6 x 20mm SHCS	
65-2508	75-3415	1	M6 x 25mm SHCS	
65-2509	75-3416	1	M6 x 30mm SHCS	
65-2510	75-3418	1	M6 x 40mm SHCS	
65-2511	75-3418	1	M6 x 40mm SHCS	

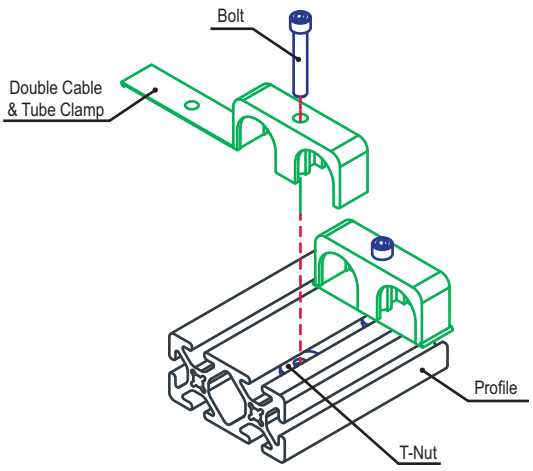

Part Description:

The Wiremold® power strip is ideal for applications that require power to many devices and is commonly used in laboratory and factory environments, offices, rack-mount applications, workbenches, and industrial solutions. It is housed in a durable, mountable encasement that allows for both vertical and horizontal installation. There are options available with 15 or 20-amps as well as a selection with a built-in circuit breaker that prevents dangerous overloads. The mounting clips and hardware to mount to a T-slot profile are included and there is no machining required.

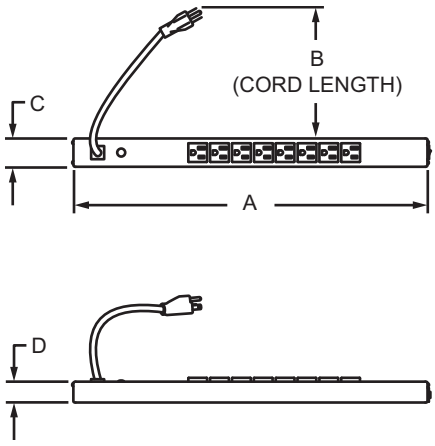

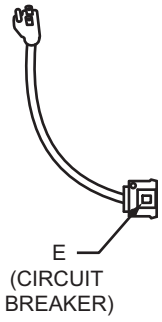

Part No.	Series	A	B	C	D	E	Surge Protection	Weight
2676	10 15 25 30 40	20.000"	6 ft	1.500"	1.190"	15 amp	NO	1.751 lb
2670	10 15 25 30 40	13.000"	6 ft	1.500"	1.190"	20 amp	NO	1.761 lb
2674	10 15 25 30 40	20.000"	6 ft	1.500"	1.190"	20 amp	YES	2.178 lb
2673	10 15 25 30 40	20.000"	15 ft	1.500"	1.190"	20 amp	NO	3.329 lb
2675	10 15 25 30 40	20.000"	15 ft	1.500"	1.190"	20 amp	YES	3.905 lb

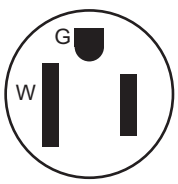

15 Amp Straight Blade

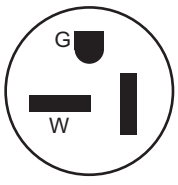

20 Amp Straight Blade

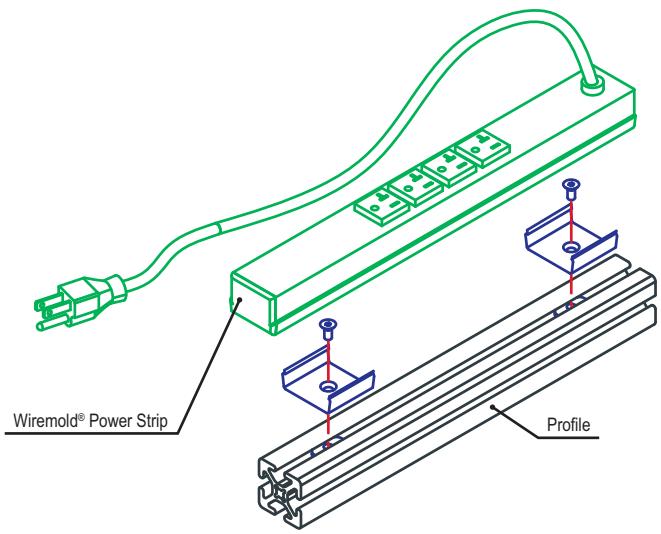

Anodize Breaker

Part Description:

The anodize breaker is made of zinc-plated steel which penetrates anodize to provide a grounded application. It twists into a T-slot then tilts at a 45 degree angle. The set screw connects to the seam of the mating profile. The anodize breaker is available for 15 and 40 series profiles. **Additional Information:** This requires a 3.00mm ball end wrench; see the Tool section beginning on page 907 for options.

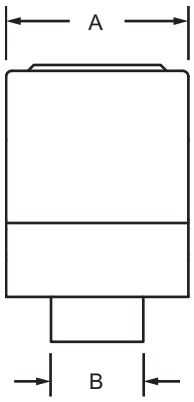

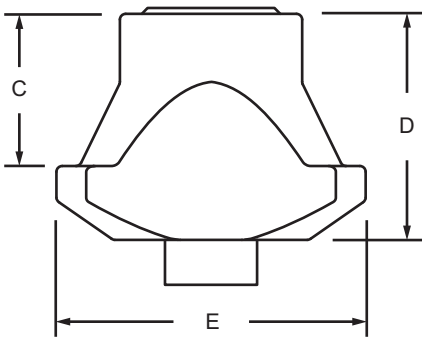

Part No.	Series	Material	Grade	Finish	A	B	C	D	E	Weight
12328	15 40	Steel	C35	Bright Zinc	.311"	.157"	.260"	.386"	.528"	.009 lb

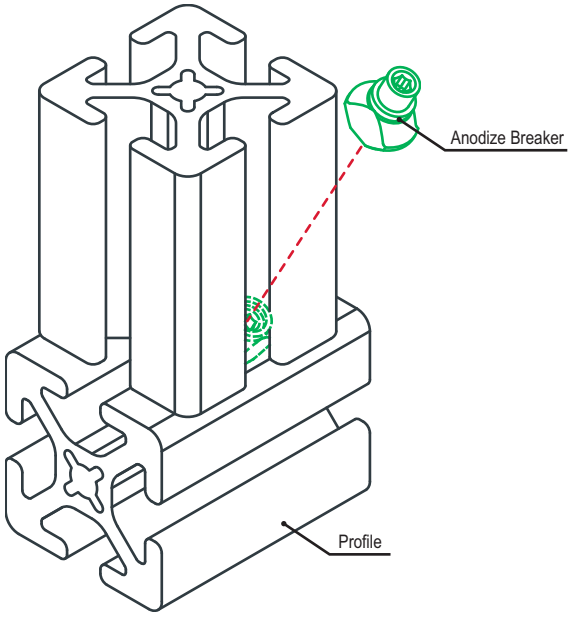

Part Description:

The grounding terminal is made of zinc-plated steel and creates a conductive electrical connection to T-slotted profiles. It is frequently used in applications such as electronics assembly where electrostatic charges must be avoided. All hardware is included. **Additional Information:** The thread rod is an M6 thread and can be adjusted using a 3.00mm ball end wrench. See the Tool section beginning on page 907 for options.

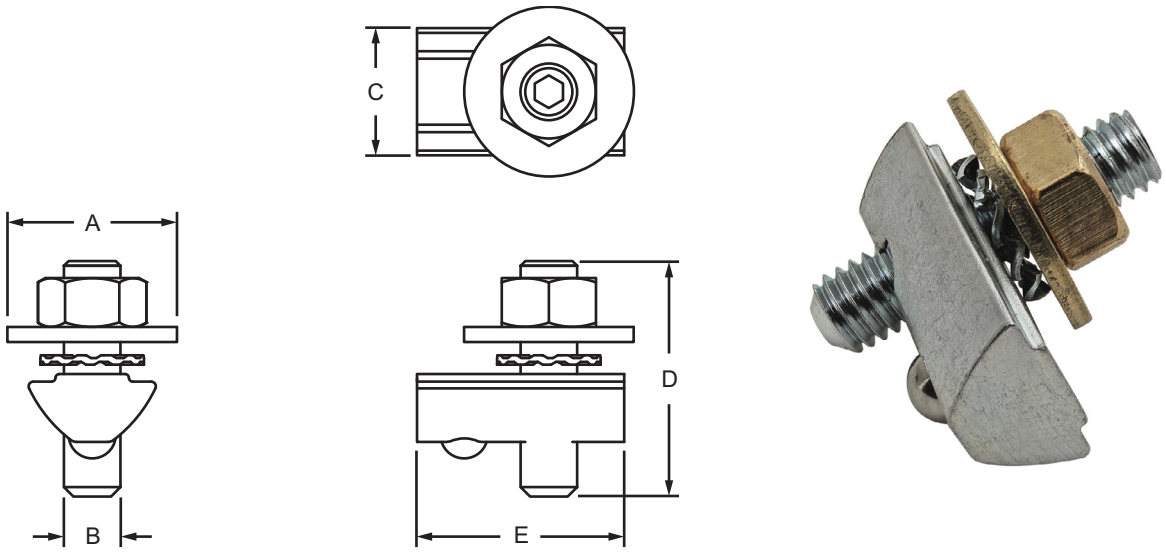

Part No.	Series	Material	Finish	Process	A	B	C	D	E	Weight
12300	15 40	Steel / Brass	Bright Zinc	Assembled	.709"	.236"	.531"	.984"	.866"	.041 lb

Storage Bin

Part Description:

The storage bin is made of polypropylene plastic that is durable yet lightweight, perfect for customized storage systems. There are options available in red, blue, or yellow to assist with organization and there are six sizes to choose from. Bins hang from an aluminum container hanger that mounts to the T-slot profile. The storage bin hanger is sold separately (page 813).

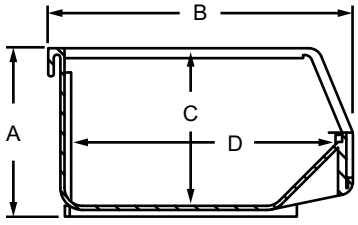

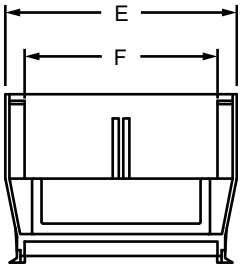

Red Bin	Blue Bin	Yellow Bin	Series	A	B	C	D	E	F	Weight
2230-RED	2230-BLU	2230-YEL	10 15	3.000"	5.375"	2.813"	4.750"	4.125"	3.438"	.156 lb
2240-RED	2240-BLU	2240-YEL	10 15	3.000"	7.375"	2.813"	6.711"	4.125"	3.438"	.232 lb
2250-RED	2250-BLU	2250-YEL	10 15	5.000"	10.875"	4.750"	10.250"	5.500"	4.375"	.644 lb
2270-RED	2270-BLU	2270-YEL	10 15	5.000"	10.875"	4.750"	10.250"	11.000"	10.000"	.984 lb
2272-RED	2272-BLU	2272-YEL	10 15	7.000"	14.750"	6.750"	14.000"	8.250"	6.563"	1.338 lb
65-2230-RED	65-2230-BLU	65-2230-YEL	25 40	76.20mm	136.53mm	71.45mm	120.65mm	104.78mm	87.33mm	.0708 kg
65-2240-RED	65-2240-BLU	65-2240-YEL	25 40	76.20mm	187.33mm	71.45mm	170.45mm	104.78mm	87.33mm	.1030 kg
65-2250-RED	65-2250-BLU	65-2250-YEL	25 40	127.00mm	276.23mm	120.65mm	260.35mm	139.70mm	111.13mm	.2083 kg
65-2270-RED	65-2270-BLU	65-2270-YEL	25 40	127.00mm	276.23mm	120.65mm	260.35mm	279.40mm	254.00mm	.4327 kg
65-2272-RED	65-2272-BLU	65-2272-YEL	25 40	177.80mm	374.65mm	171.45mm	355.60mm	209.55mm	166.70mm	.6069 kg

Material Specifications

Material	Finish	Process
Plastic	Gloss	Molded

Part Description:

The storage bin hanger is made from aluminum and is used to mount a storage bin to an application. All mounting hardware is included. **Additional Information:** For a custom length hanger, see the storage bin hanger profile on page 854.

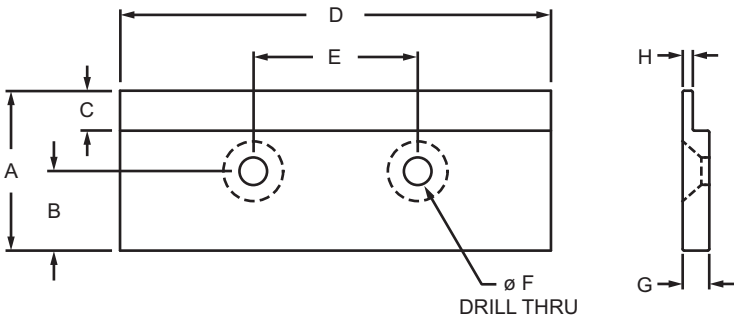

Part No.	Series	Color	A	B	C	D	E	F	G	H	Weight
2264	10 15	Clear	1.500"	.745"	.375"	6.000"	3.500"	1/4-20	.250"	.100"	.236 lb
2264-Black	10 15	Black	1.500"	.745"	.375"	6.000"	3.500"	1/4-20	.250"	.100"	.236 lb
2265	10 15	Clear	1.500"	.745"	.375"	12.000"	4.000"	1/4-20	.250"	.100"	.444 lb
2265-Black	10 15	Black	1.500"	.745"	.375"	12.000"	4.000"	1/4-20	.250"	.100"	.444 lb
65-2264	25 30 40 45	Clear	38.10mm	18.92mm	9.53mm	160.00mm	88.90mm	1/4-20	6.35mm	2.54mm	.1081 kg
65-2264-Black	25 30 40 45	Black	38.10mm	18.92mm	9.53mm	160.00mm	88.90mm	1/4-20	6.35mm	2.54mm	.1081 kg
65-2265	25 30 40 45	Clear	38.10mm	18.92mm	9.53mm	320.00mm	101.60mm	1/4-20	6.35mm	2.54mm	.2083 kg
65-2265-Black	25 30 40 45	Black	38.10mm	18.92mm	9.53mm	320.00mm	101.60mm	1/4-20	6.35mm	2.54mm	.2083 kg

Material Specifications

Material	Alloy*	Finish	Process
Aluminum	6105-T5	Anodize	Machined

* Or comparable

Included Hardware (Mount to T-Slot)

Part No.	Bolt	Qty.	Bolt	Qty.	T-Nut	Qty.
2264	3400	2	3405	2	3382	2
2264-Black	3400	2	3405	2	3382	2
65-2264	13-6712	2	13-6716	2	3859	2
65-2264-Black	13-6712	2	13-6716	2	3859	2

For parts 2265, 2265-Black, 65-2265, and 65-2265-Black the included quantity is 3.

Heavy-Duty Monitor Mount

Part Description:

The heavy duty monitor mount aids ergonomic initiatives and keeps the monitor off the work surface. It is compatible with the Video Electronics Standards Association (VESA) mounting patterns of 100x100, 200x100, or 200x200, which includes most 23" to 42" displays. The mount supports adjustments in three dimensions; it can rotate 360 degrees, tilt ranging from 15 degrees upward to 15 degrees downward, and swivel ± 90 degrees. Additionally, it can be extended from the mounting surface a minimum distance of 3.82 inches (97mm) to a maximum of 16.65 inches (423mm). The mount can safely hold up to 44 pounds (20 kg).

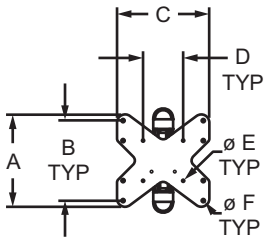

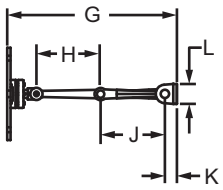

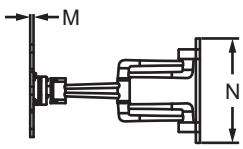

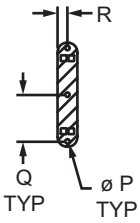

Part No.	Series	A	B	C	D	E	F	G	H
2285	15 40 45	9.075" (230.50mm)	7.874" (200.00mm)	9.055" (230.00mm)	3.937" (100.00mm)	.213" (5.41mm)	.331" (8.41mm)	16.654" (423.01mm)	6.299" (160.00mm)
	J	K	L	M	N	P	Q	R	Weight
2285	6.299" (160.00mm)	1.181" (30.00mm)	1.950" (49.53mm)	.331" (8.41mm)	10.236" (260.00mm)	.236" (6.00mm)	4.579" (116.31mm)	.974" (24.74mm)	4.467 lb (2.0262 kg)

Material Specifications

Material	Finish	Color
Zinc	Powder Coat	Aluminum Silver

Suggested Hardware (Mount to T-Slot)

Series	Part No.	Qty.	Bolt	Part No.	Qty.	T-Nut
15	13-6316	3	M6 x 16mm BHSCS	3836	3	Slide-in
40	13-6316	3	M6 x 16mm BHSCS	40-1961	3	Slide-in
45	13-6316	3	M6 x 16mm BHSCS	13130	3	Drop-in

Part Description:

The adjustable monitor mount aids ergonomic initiatives and keeps the monitor off of the work surface. It is compatible with the Video Electronics Standards Association (VESA) mounting patterns of 75x75 and 100x100, which includes most 10 to 24-inch displays. The mount supports adjustments in four dimensions; it can be swiveled ± 90 degrees, tilted ranging from 45 degrees upward to 45 degrees downward, and rotated 90 degrees. Additionally, it can be extended from the mounting surface a minimum distance of 3.1 inches (78.74mm) to a maximum of 11.0 inches (279.4mm). The mount can safely hold up to 30 pounds (13.61kg), including the weight of the mount itself.

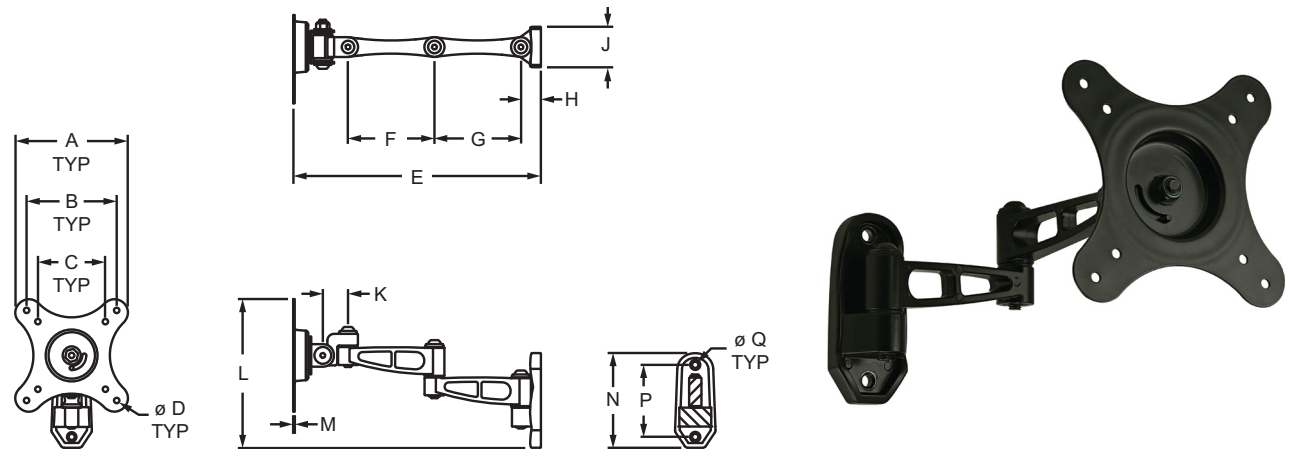

Part No.	Series	Material	Color	A	B	C	D	E	F	G
2339	15 30 40 45	Die Cast Aluminum	Black	4.921"	3.937"	2.953"	.197"	10.827"	3.780"	3.780"
		H	J	K	L	M	N	P	Q	Weight
2339	15 30 40 45	.874"	1.768"	1.102"	6.494"	.065"	4.134"	3.150"	.267"	1.310 lb

Suggested Hardware (Mount to T-Slot)

Part No.	Series	Qty.	Bolt	T-Nut
3408	15 30	2	1/4-20 x .500" BHSCS	Drop-in
75-3600	40	2	M6 x 12mm BHSCS	Drop-in
75-3602	45	2	M6 x 14mm BHSCS	Drop-in

Slide-In Tool Hanger

Part Description:

The slide-in tool hanger is made of high-strength black nylon and is ideal for hanging air tools, cable reels, and heavy door panels. It slides into a T-slot end and moves easily within the channel with no lubrication necessary. There is a hole in the hanger for a spring hook (page 817). The tool hanger has a 100 pound (68 kg.) capacity.

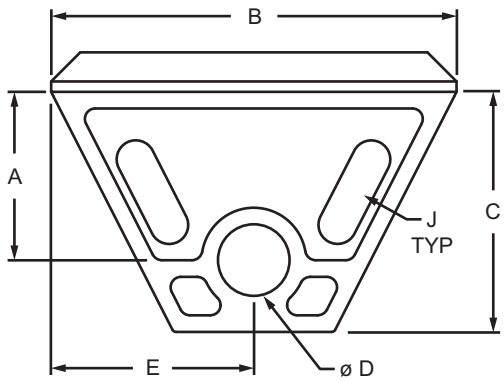

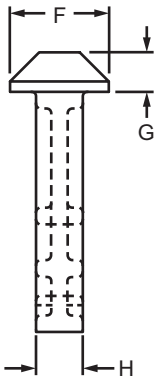

Part No.	Series	A	B	C	D	E	F	G	H	J	Weight
2099	10	.810"	1.950"	1.156"	.344"	.975"	.475"	.190"	.225"	R .098" x .354"	.013 lb
2100	15	1.250"	2.900"	1.670"	.500"	1.450"	.625"	.250"	.250"	R .098" x .472"	.030 lb
25-2099	25	20.57mm	49.53mm	29.36mm	8.74mm	24.77mm	12.07mm	4.83mm	5.72mm	R 2.49mm x 8.99mm	.0060 kg
12016	30	21.80mm	60.00mm	33.00mm	10.50mm	30.00mm	14.00mm	4.20mm	7.50mm	—	.0086 kg
40-2100	40	31.75mm	73.66mm	42.42mm	12.70mm	36.83mm	15.88mm	6.35mm	6.35mm	R 2.49mm x 11.99mm	.0138 kg
12015	45	21.80mm	60.00mm	33.00mm	10.50mm	30.00mm	18.00mm	4.20mm	7.50mm	—	.0109 kg

Material Specifications

Part No.	Material	Grade	Finish	Process
2099	Nylon	—	Matte	Molded
2100	Nylon	—		
25-2099	Nylon	—		
12016	Glass Filled Nylon	PA6 GF30		
12015	Glass Filled Nylon	PA6 GF30		
40-2100	Nylon	—		

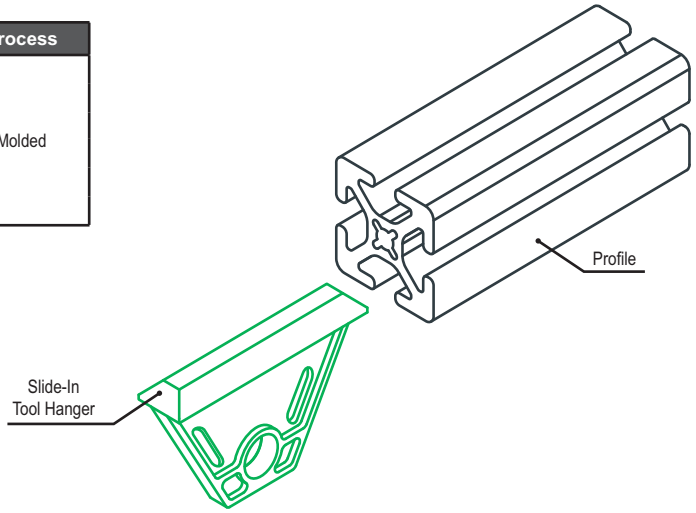

Part Description:

The tool hanger spring hook is commonly used with the slide-in tool hanger to hang cables, air tools, and reels. It makes it easy and quick to change devices and is comprised of electro-galvanized mild steel creating a strong and durable option with a 550 pound (374 kg.) breaking capacity.

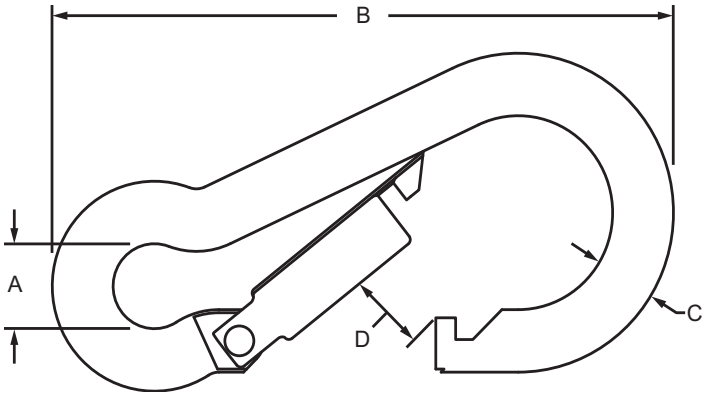

Part No.	Series	Material	Grade	Finish	Process	A	B	C	D	Weight
2108	10 15	Steel	Mild	Galvanized	Formed	.313"	2.375"	.230"	.313"	.059 lb
65-2108	25 40					7.95mm	60.33mm	5.84mm	7.95mm	.0268 kg

Vertical Mount Hook

Part Description:

The vertical mount hook can be used to provide storage and organization. It mounts vertically to a T-slot profile.

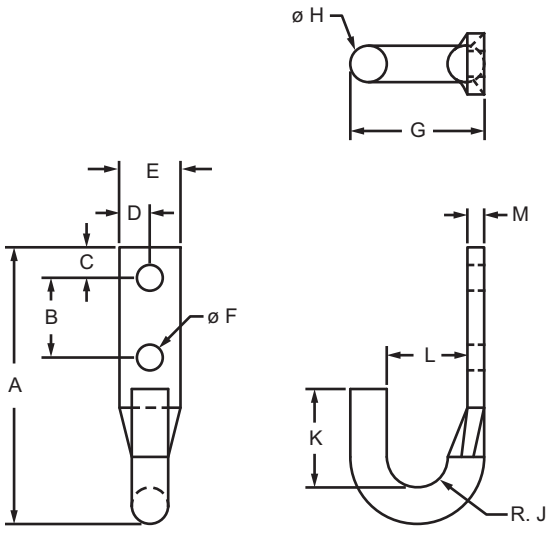

Part No.	Series	Material	A	B	C	D	E	F	G	H	J	K	L	M	Weight
14158	10 15 25 30 40 45	Steel	2.810"	.810"	.310"	.310"	.620"	.260"	1.360"	.370"	.310"	1.000"	.820"	.170"	.290 lb

Suggested Hardware (Mount to T-Slot)

Series	Part No.	Qty.	Bolt	Part No.	Qty.	T-Nut
10	3061	2	1/4-20 x .500" BHSCS	3376	2	Roll-in
15	3063	2	1/4-20 x .625" BHSCS	14165	2	Drop-in
25	11-6312	2	M6 x 12mm BHSCS	25-1966	2	Roll-in
30	11-6312	2	M6 x 12mm BHSCS	13117	2	Drop-in
40	11-6314	2	M6 x 14mm BHSCS	13119	2	Drop-in
45	11-6316	2	M6 x 16mm BHSCS	13129	2	Drop-in

Part Description:

The horizontal mount hook can be used to provide storage and organization. It mounts horizontally to a T-slot profile.

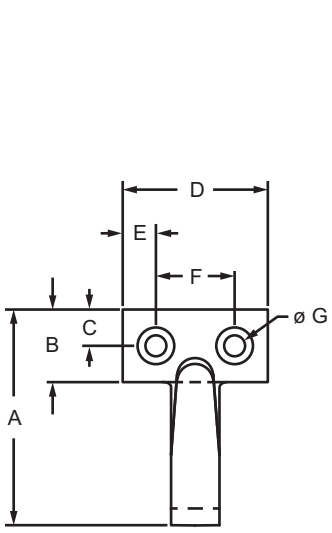

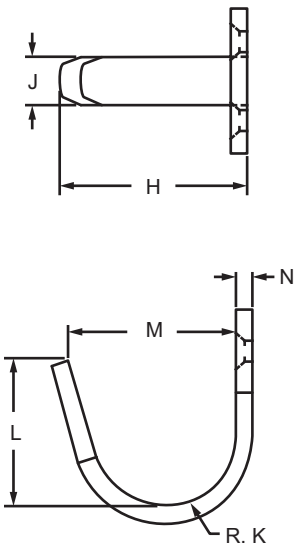

Part No.	Series	Material	A	B	C	D	E	F	G	H	J	K	L	M	N	Weight
14155	10 15 25 30 40 45	Steel	1.859"	.750"	.375"	1.515"	.359"	.813"	.204"	1.643"	.496"	.559"	1.194"	1.474"	.175"	.113 lb

Suggested Hardware (Mount to T-Slot)

Series	Part No.	Qty.	Bolt	Part No.	Qty.	T-Nut
10	3042	2	10-32 x .375" BHSCS	3375	2	Roll-in
15	3050	2	10-32 x .500" BHSCS	3932	2	Drop-in
25	11-5310	2	M5 x 10mm BHSCS	25-1956	2	Roll-in
30	11-5310	2	M5 x 10mm BHSCS	13115	2	Drop-in
40	11-5314	2	M5 x 14mm BHSCS	13116	2	Drop-in
45	11-5316	2	M5 x 16mm BHSCS	13127	2	Drop-in

Magnetic Tool Holder

Part Description:

The magnetic tool holder is commonly used to organize and store tools. It mounts to a T-slot profile.

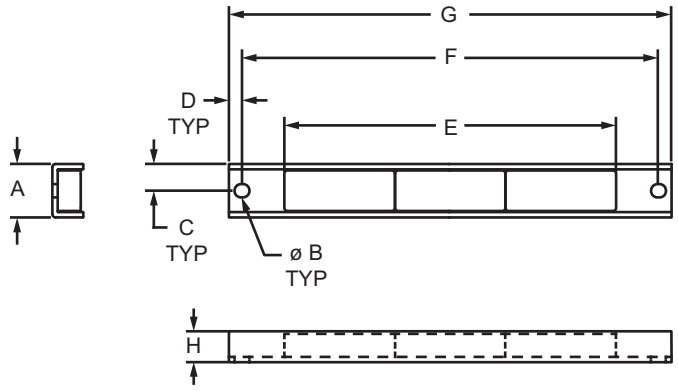

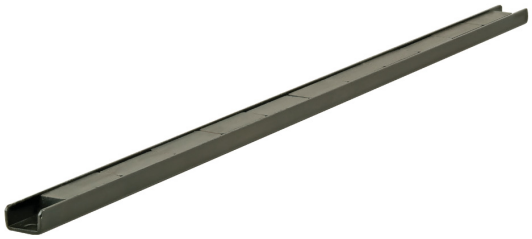

Part No.	Series	Material	Color	A	B	C	D	E	F	G	H	Weight
3959	10 15 25 30 40 45	Steel	Black	.950"	.236"	.475"	.233"	21.654"	23.160"	23.625"	.550"	2.062 lb

Suggested Hardware (Mount to T-Slot)

Series	Part No.	Qty.	Bolt	Part No.	Qty.	T-Nut
10	11-6312	2	M6 x 12mm BHSCS	3859	2	Slide-in
15	11-6312	2	M6 x 12mm BHSCS	3931	2	Drop-in
25	11-6310	2	M6 x 10mm BHSCS	25-1961	2	Slide-in
30	11-6310	2	M6 x 10mm BHSCS	13117	2	Drop-in
40	11-6312	2	M6 x 12mm BHSCS	40-1961	2	Slide-in
45	11-6312	2	M6 x 12mm BHSCS	13129	2	Drop-in

Part Description:

The tool holder – open bottom easily mounts to a T-slot profile and holds tools, such as drills and drivers, larger bottles and cups. This item is commonly used in workstations, assembly cells, and carts.

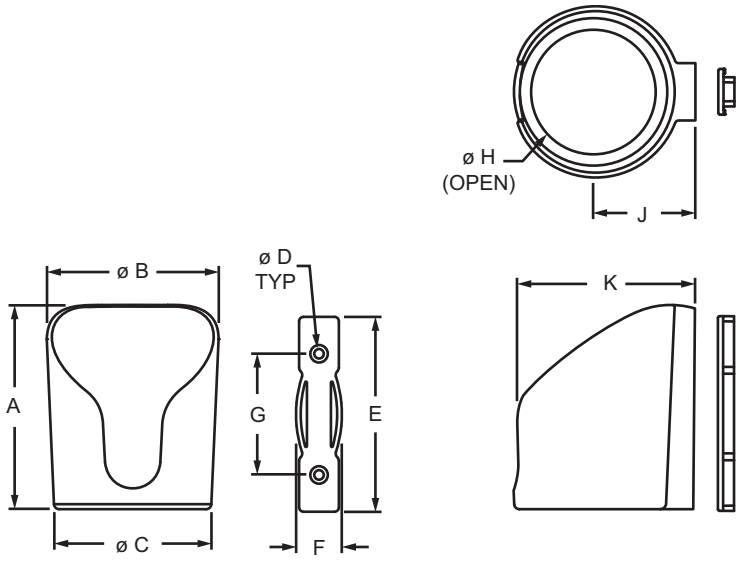

Part No.	Series	A	B	C	D	E	F	G	H	J	K	Weight
2286	10 15 25 30 40	4.606"	3.874"	3.594"	.228"	4.449"	1.023"	2.756"	2.913"	2.303"	4.045"	.321 lb

Material Specifications

Material	Process	Color
Nylon	Molded	Black

Suggested Hardware (Mount to T-Slot)

Series	Part No.	Qty.	Bolt	Part No.	Qty.	T-Nut
10	11-5716	2	M5 x 16mm FHSCS	3875	2	Roll-in
15	11-5716	2	M5 x 16mm FHSCS	3844	2	Roll-in
25	11-5716	2	M5 x 16mm FHSCS	25-1956	2	Roll-in
30	11-5716	2	M5 x 16mm FHSCS	13115	2	Drop-in
40	11-5716	2	M5 x 16mm FHSCS	40-3913	2	Roll-in

Cup Holder - Closed Bottom

Part Description:

The cup holder – closed bottom easily mounts to a T-slot profile and holds bottles and cups. This item is commonly used in workstations, assembly cells, and carts.

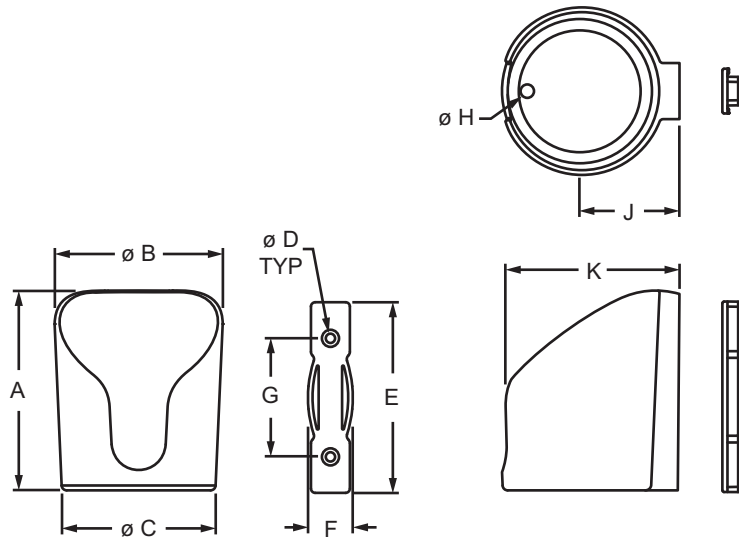

Part No.	Series	A	B	C	D	E	F	G	H	J	K	Weight
2287	10 15 25 30 40	4.606"	3.874"	3.594"	.228"	4.449"	1.023"	2.756"	.315"	2.303"	4.045"	.346 lb

Material Specifications

Material	Process	Color
Nylon	Molded	Black

Suggested Hardware (Mount to T-Slot)

Series	Part No.	Qty.	Bolt	Part No.	Qty.	T-Nut
10	11-5716	2	M5 x 16mm FHSCS	3875	2	Roll-in
15	11-5716	2	M5 x 16mm FHSCS	3844	2	Roll-in
25	11-5716	2	M5 x 16mm FHSCS	25-1956	2	Roll-in
30	11-5716	2	M5 x 16mm FHSCS	13115	2	Drop-in
40	11-5716	2	M5 x 16mm FHSCS	40-3913	2	Roll-in

Part Description:

The light-duty adhesive clamp is a black plastic holder that snaps shut to secure documents, paper, vinyl and fabric up to .040" (1.016mm) thick. It mounts with an adhesive peel and stick backing and adheres to most materials.

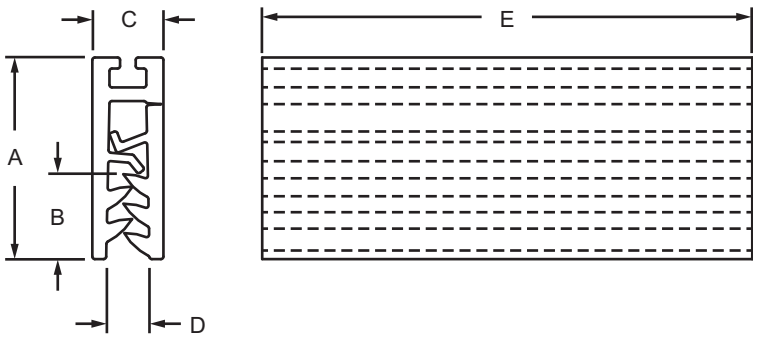

Part No.	Series	Material	Finish	Process	Color	A	B	C	D	E	Weight
2851	F M	PVC	Matte	Molded	Black	.800"	.337"	.282"	.172"	3.000"	.017 lb
2852	F M					.800"	.337"	.282"	.172"	22.000"	.140 lb
65-2851	F M					20.32mm	8.56mm	7.16mm	4.37mm	76.20mm	.0076 kg
65-2852	F M					20.32mm	8.56mm	7.16mm	4.37mm	558.80mm	.0630 kg

Label Holder

Part Description:

The label holder is made of heavy-duty clear plastic with an anti-glare finish. It snaps into a T-slot to securely hold labels and is commonly used for displaying instructions or safety information. **Additional Information:** Please note that label holders are sold in packs of 25.

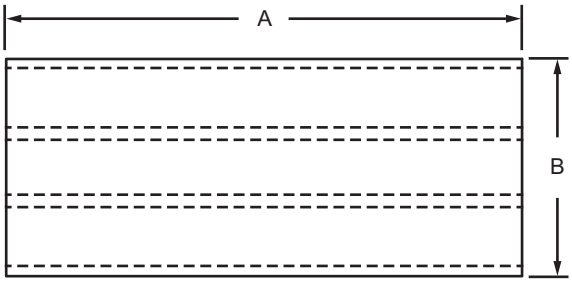

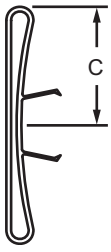

Part No.	Series	Material	Process	Color	A	B	C	Weight
2843	10	Plastic	Extruded	Clear	3.000"	1.000"	.500"	.247 lb
2844	10				6.000"	1.000"	.500"	.483 lb
2845	15				4.000"	2.000"	.630"	.699 lb
2846	15				6.000"	2.000"	.630"	1.072 lb
25-2843	25				76.20mm	25.40mm	12.70mm	.1122 kg
25-2844	25				152.40mm	25.40mm	12.70mm	.2194 kg
40-2845	40				101.60mm	50.80mm	15.90mm	.3171 kg
40-2846	40				152.40mm	50.80mm	15.90mm	.4865 kg

Part Description:

The rubber bumper is commonly used to dampen vibrations or as a door stop or shock mount. The hardware to mount the bumper to a T-slot is included.

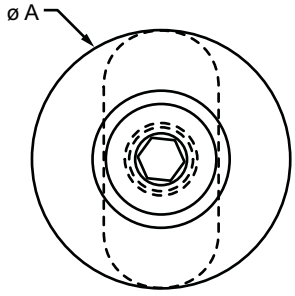

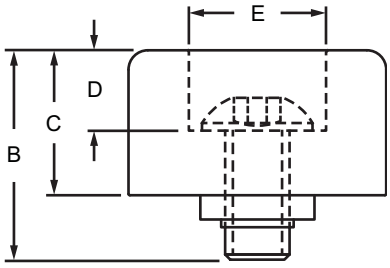

Part No.	Series	Material	Color	A	B	C	D	E	Weight
2850	10	Rubber	Black	1.000"	.813"	.563"	.313"	.531"	.035 lb
2849	15			1.500"	1.031"	.625"	.344"	.750"	.089 lb
25-2850	25 30			25.40mm	21.95mm	14.30mm	7.95mm	13.49mm	.0186 kg
40-2849	40 45			38.10mm	26.74mm	15.88mm	8.74mm	19.05mm	.0376 kg

Included Hardware (Mount to T-Slot)

Series	Part No.	Qty.	Bolt	Part No.	Qty.	T-Nut
10	3061	1	1/4-20 x 1/2" BHSCS	3382	1	Economy
15	3330	1	5/16-18 x 11/16" FBHSCS	3278	1	Economy
25 30	11-6314	1	M6 x 14mm BHSCS	3859	1	Economy
40 45	11-8318	1	M8 x 18mm BHSCS	3838	1	Economy

Tabletop Mounting Tape

Part Description:

The tabletop mounting tape is a high-strength bonding method that is easy to use and provides long-term durability. The 3M™ VHB™ double-sided tape adheres to a wide variety of materials and is commonly used to mount a tabletop work surface horizontally, as it eliminates the need for machining. The pressure-sensitive adhesive bonds on contact. **Additional Information:** Please note this product is sold in packs of 10 pieces.

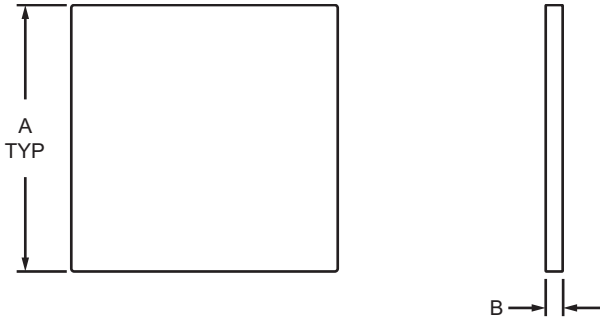

Part No.	Series	Material	Color	A	B	Weight
13099	F M	Acrylic	White	1.181" (30.00mm)	.039" (1.00mm)	.023 lb (.0104 kg)

Pictorial Table Of Contents

Flat Stock Profile

Page 829

Block Profile

Page 831

Square/Rectangular Tube Profile
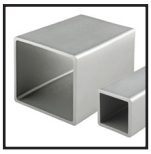
Page 832

Inside Corner Connector Profile
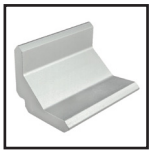
Page 833

Stanchion Profile

Page 834

Aluminum Tube Profile
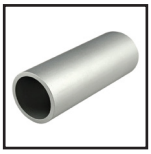
Page 835

Steel Tube
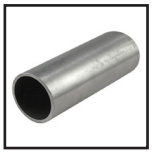
Page 836

Steel Solid Round

Page 837

Angle Profile

Page 838

45 Degree Gusset Profile
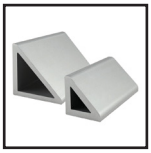
Page 840

Deadbolt Latch Profile

Page 841

Standard Nub Profile

Page 842

Right Angle Nub Profile

Page 843

Hinge Profile

Page 844

Roll-in Panel Mount Bracket Profile

Page 845

Panel Mount Block Profile

Page 846

Clamp Block Profile

Page 847

Single Flange Bearing Profile

Page 848

Double Flange Bearing Profile

Page 849

Single Flange UniBearing™ Profile

Page 850

Double Flange UniBearing™ Profile
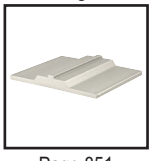
Page 851

Single Retainer Profile

Page 852

Double Retainer Profile
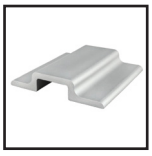
Page 853

Storage Bin Hanger Profile

Page 854

Panel Stiffener Profile

Page 855

Tube Insert Profile

Page 856

Structural Shapes for Custom Solutions

Structural shapes are commonly used for custom projects; if there's a unique flat plate, manifold, bearing, or bracket you need, we have the material in stock to make it for you.

From solid aluminum plates, deadbolt latches, angle profiles, or panel mount blocks, this wide selection of in-house shapes provides a quick turn time for your design.

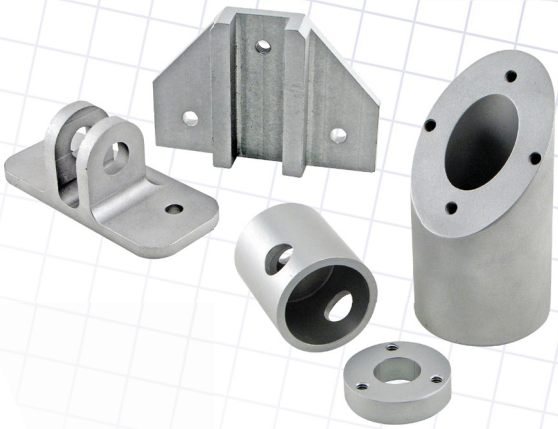

In-House Machining Capabilities

80/20 also provides an in-house Custom Machining service to modify any of our structural shapes to fit your requirements. This gives you access to a high-precision, large capacity machine shop to customize your parts quickly and accurately.

For More Info

Talk to a design technician today at 260-248-8030 to see how we can help create your custom part.

Selection of Finishes

All of the structural shapes are available with either a mill or anodize finish. We also offer black anodize to create an aesthetic look.

Mill Finish

Clear Anodize

Black Anodize

Part Description:

The flat stock profile can be cut to your desired length. It is perfect for unique custom parts such as flat plates, manifolds, and floor mounts. There are options available in a mill or anodize finish. See page 860 for the cut-to-length machining service.

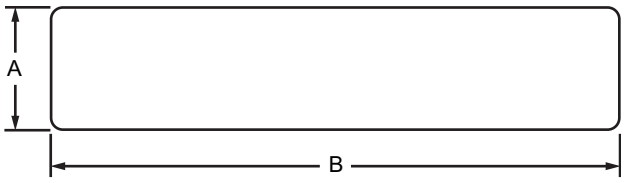

Part No.										
Clear Anodize*	Natural Mill	Black Anodize*	Full Length	Series	Material	Alloy**	Process	A	B	Weight
8303	8304	8304-Black	145"	F	Aluminum	6105-T5	Extruded	.188"	.875"	.016 lb / in.
8317	8318	8318-Black	145"	F		6105-T5		.250"	.875"	.017 lb / in.
8307	8308	8308-Black	145"	F		6105-T5		.188"	1.000"	.018 lb / in.
8310	8311	8311-Black	145"	F		6105-T5		.250"	1.000"	.025 lb / in.
8315	8316	8316-Black	144"	F		6105-T5		.500"	1.000"	.049 lb / in.
8320	8321	8321-Black	145"	F		6105-T5		.250"	1.490"	.037 lb / in.
8322	8323	8323-Black	144"	F		6105-T5		.500"	1.500"	.073 lb / in.
8325	8326	8326-Black	145"	F		6105-T5		.750"	1.500"	.108 lb / in.
8330	8331	8331-Black	145"	F		6105-T5		.188"	2.000"	.037 lb / in.
8327	8328	8328-Black	144"	F		6105-T5		.500"	2.000"	.098 lb / in.
8337	8338	8338-Black	144"	F		6105-T5		.500"	2.500"	.122 lb / in.
8335	8336	8336-Black	145"	F		6105-T5		.188"	3.000"	.055 lb / in.
8340	8341	8341-Black	145"	F		6105-T5		.250"	3.000"	.074 lb / in.
8342	8343	8343-Black	145"	F		6061-T6		.500"	3.000"	.147 lb / in.
8345	8346	8346-Black	145"	F		6105-T5		.750"	3.000"	.221 lb / in.
8360	8361	8361-Black	145"	F		6105-T5		.188"	4.000"	.075 lb / in.
8365	8366	8366-Black	144"	F		6105-T5		.250"	4.000"	.095 lb / in.
8370	8371	8371-Black	145"	F		6105-T5		.750"	4.000"	.300 lb / in.
8375	8376	8376-Black	145"	F		6105-T5		.250"	4.500"	.114 lb / in.
8385	8386	8386-Black	145"	F		6105-T5		.250"	6.000"	.146 lb / in.
8390	8391	8391-Black	145"	F		6105-T5		.375"	6.000"	.221 lb / in.

* Longer lead times apply

** Or comparable

CONTINUE

Flat Stock Profile (Continued)

Part No.										
Clear Anodize*	Natural Mill	Black Anodize*	Full Length	Series	Material	Alloy**	Process	A	B	Weight
25-8307	25-8308	25-8308-Black	4M	M	Aluminum	6105-T5	Extruded	4.00mm	25.00mm	.0003 kg / mm
25-8310	25-8311	25-8311-Black	4M	M				6.00mm	25.00mm	.0004 kg / mm
25-8330	25-8331	25-8331-Black	4M	M				4.00mm	50.00mm	.0005 kg / mm
25-8327	25-8328	25-8328-Black	4M	M				12.00mm	50.00mm	.0016 kg / mm
25-8337	25-8338	25-8338-Black	4M	M				12.00mm	62.50mm	.0020 kg / mm
25-8335	25-8336	25-8336-Black	4M	M				4.00mm	75.00mm	.0013 kg / mm
25-8360	25-8361	25-8361-Black	4M	M				4.00mm	100.00mm	.0011 kg / mm
25-8370	25-8371	25-8371-Black	4M	M				19.00mm	100.00mm	.0051 kg / mm
40-8320	40-8321	40-8321-Black	4M	M				6.00mm	39.80mm	.0006 kg / mm
40-8322	40-8323	40-8323-Black	4M	M				12.00mm	40.00mm	.0013 kg / mm
40-8325	40-8326	40-8326-Black	4M	M				19.00mm	40.00mm	.0020 kg / mm
40-8340	40-8341	40-8341-Black	4M	M				6.00mm	80.00mm	.0013 kg / mm
40-8345	40-8346	40-8346-Black	4M	M				19.00mm	80.00mm	.0040 kg / mm
40-8375	40-8376	40-8376-Black	4M	M				6.00mm	120.00mm	.0019 kg / mm
40-8385	40-8386	40-8386-Black	4M	M				6.00mm	160.00mm	.0026 kg / mm
40-8390	40-8391	40-8391-Black	4M	M				9.00mm	160.00mm	.0025 kg / mm
45-8320	45-8321	45-8321-Black	4M	M				6.00mm	44.50mm	.0015 kg / mm
45-8340	45-8341	45-8341-Black	4M	M				6.00mm	90.00mm	.0032 kg / mm

* Longer lead times apply

** Or comparable

Part Description:

The block profile can be cut to your desired length. It is perfect for custom base plates and mounting blocks. There are options available in a mill or anodize finish. See page 860 for the cut-to-length machining service.

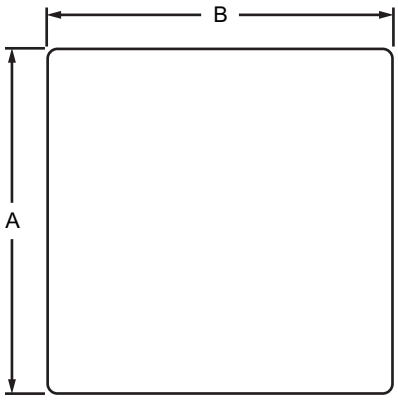

Part No.										
Clear Anodize*	Natural Mill	Black Anodize*	Full Length	Series	Material	Alloy**	Process	A	B	Weight
8313	8314	8314-Black	145”	F	Aluminum	6105-T5	Extruded	1.125”	1.125”	.124 lb / in.
8305	8306	8306-Black	145”	F		6105-T5		1.625	1.625	.259 lb / in.
8419	8319	8319-Black	144”	F		6061-T6		1.750”	1.750”	.259 lb / in.
8703	8704	8704-Black	72”	F		6105-T5		2.060”	2.060”	.424 lb / in.
8394	8395	8395-Black	144”	F		6061-T6		2.250”	2.250”	.496 lb / in.
8400	8401	8401-Black	72”	F		6105-T5		2.560”	2.560”	.651 lb / in.
8720	8721	8721-Black	72”	F		6105-T5		2.750”	2.750”	.741 lb / in.
8725	8724	8724-Black	72”	F		6061-T6		3.250”	3.250”	1.200 lb / in.
8722	8723	8723-Black	72”	F		6061-T6		3.500”	3.500”	1.200 lb / in.
8710	8711	8711-Black	145”	F		6105-T5		1.260”	2.060”	.259 lb / in.
8713	8714	8714-Black	145”	F		6105-T5		1.510”	3.060”	.462 lb / in.
8420	8392	8392-Black	72”	F		6061-T6		2.500”	3.000”	.735 lb / in.
8408	8407	8407-Black	144”	F		6061-T6		1.500”	3.500”	.784 lb / in.
8405	8406	8406-Black	72”	F		6061-T6		2.000”	4.000”	.784 lb / in.
8422	8397	8397-Black	144”	F		6061-T6		1.250”	4.500”	.551 lb / in.
8424	8399	8399-Black	72”	F		6061-T6		1.500”	6.000”	.882 lb / in.
8403	8402	8402-Black	72”	F		6061-T6		2.000”	7.000”	1.370 lb / in.

* Longer lead times apply

** Or comparable

Square/Rectangular Tube Profile

Part Description:

The square and rectangular tube profiles can be cut to your desired length. It is perfect for medium-duty projects that need an open center cavity or that don't require a T-slot channel. There are options available in a mill or anodize finish. See page 860 for the cut-to-length machining service.

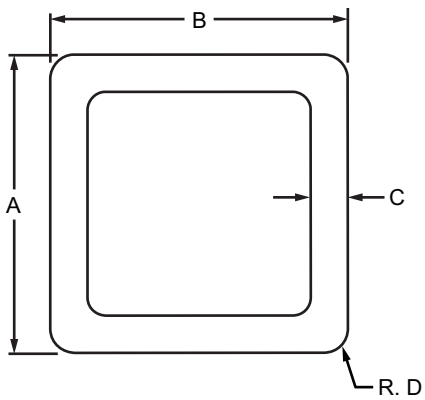

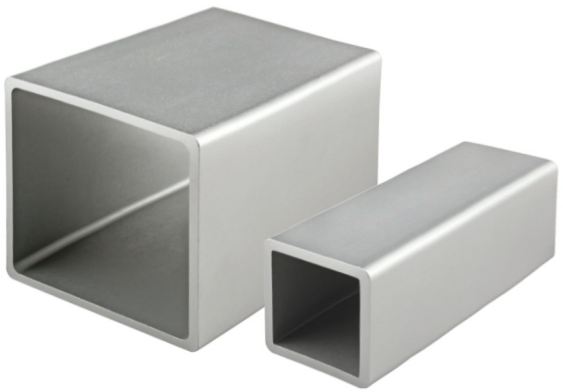

Part No.												
Clear Anodize*	Natural Mill	Black Anodize*	Full Length	Series	Material	Alloy**	Process	A	B	C	D	Weight
8110	8111	8111-Black	145"	F	Aluminum	6105-T5	Extruded	1.000"	1.000"	.125"	.083"	.043 lb / in.
8115	8116	8116-Black	145"	F				1.500"	1.500"	.125"	.125"	.066 lb / in.
8120	8121	8121-Black	145"	F				1.500"	3.000"	.125"	.125"	.099 lb / in.
8125	8126	8126-Black	145"	F				3.000"	3.000"	.125"	.125"	.136 lb / in.

* Longer lead times apply

** Or comparable

Part Description:

The inside corner connector profile can be cut to your desired length. There are options available in a mill or anodize finish. It is typically used to create an inside corner connector which is a strong method for forming a 90 degree connection between profiles. See page 860 for the cut-to-length machining service.

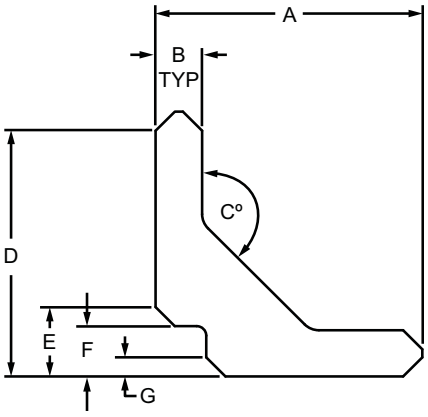

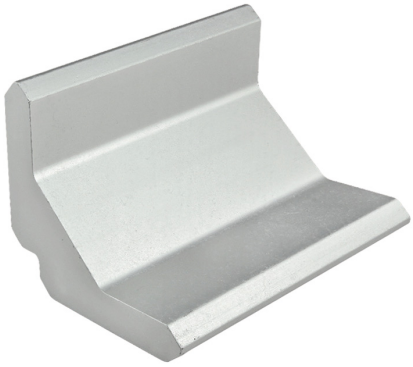

Part No.												
Clear*	Natural	Black*	Full Length	Series	A	B	C	D	E	F	G	Weight
8413	8414	8414-Black	145"	F	2.500"	.436"	135°	2.320"	.655"	.475"	.180"	.212 lb / in.

* Longer lead times apply

Material Specifications

Part No.	Material	Alloy*	Finish	Process
8413	Aluminum	6105-T5	Anodize	Extruded
8414			Mill	
8414-Black			Anodize	

* Or comparable

Stanchion Profile

Part Description:

The stanchion profile can be cut to your desired length. It is commonly used to create customized stanchions which provide multi-access positioning. There are options available in a mill or anodize finish. See page 860 for the cut-to-length machining service.

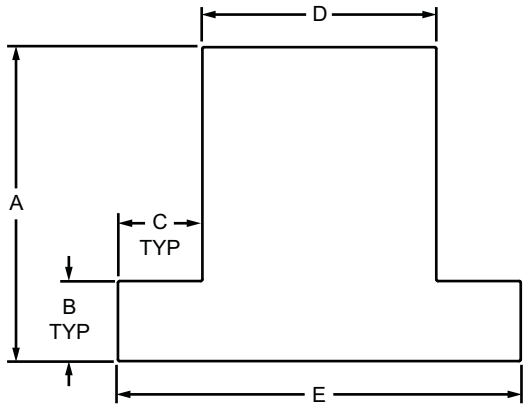

Part No.										
Clear*	Natural	Black*	Full Length	Series	A	B	C	D	E	Weight
8600	8601	8601-Black	72”	F	2.520”	.520”	.750”	1.500”	3.000”	.456 lb / in.
8605	8606	8606-Black	72”	F	3.020”	.770”	.812”	2.250”	3.874”	.804 lb / in.

* Longer lead times apply

Material Specifications

Part No.	Material	Alloy*	Finish	Process
8600	Aluminum	6105-T5	Anodize	Extruded
8601			Mill	
8601-Black			Anodize	
8605			Anodize	
8606			Mill	
8606-Black			Anodize	

* Or comparable

Part Description:

The aluminum tube profile can be cut to your desired length. It is made of 6061-T6 aluminum which provides a high strength-to-weight ratio and is commonly used with stanchions to create custom axes. It can be used for projects that need an open center cavity or that don't require a T-slot channel. There are options available in a mill or anodize finish. See page 860 for the cut-to-length machining service.

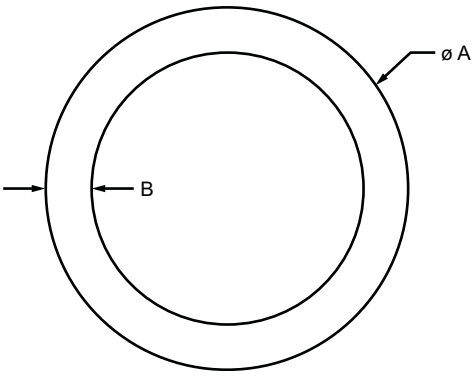

Part No.									
Clear Anodize	Natural Mill	Black Anodize*	Full Length	Series	Material	Alloy**	A	B	Weight
5035	5036	5036-Black	144"	F	Aluminum	6061-T6	1.000"	.125"	.034 lb / in.
5040	5041	5041-Black	144"	F			1.500"	.125"	.069 lb / in.
5045	5046	5046-Black	144"	F			2.000"	.125"	.100 lb / in.

* Longer lead times apply

** Or comparable

Steel Tube

Part Description:

The steel tube can be cut to your desired length. It is ground, polished, and unfinished, meaning it does not have any plating or oxide. Steel tube is commonly used with stanchions to create custom axes. See page 860 for the cut-to-length machining service.

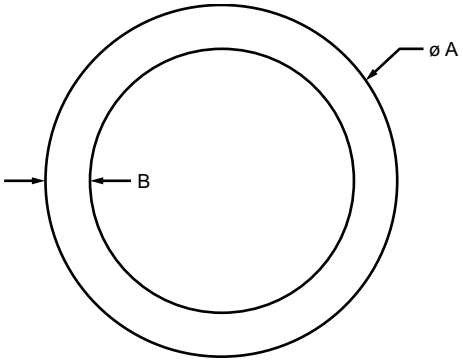

Part No.	Full Length	Series	Material	Grade	Finish	Process	Color	A	B	Weight
5005	145"	F	Carbon Steel	1020	Non-Plated	Drawn, Ground, and Polished	Unfinished	1.000"	.125"	.102 lb / in.
5015	145"	F						1.500"	.125"	.131 lb / in.
5025	145"	F						2.000"	.125"	.273 lb / in.

Part Description:

The steel solid round can be cut to your desired length. It is ground, polished, and unfinished, meaning it does not have any plating or oxide. See page 860 for the cut-to-length machining service.

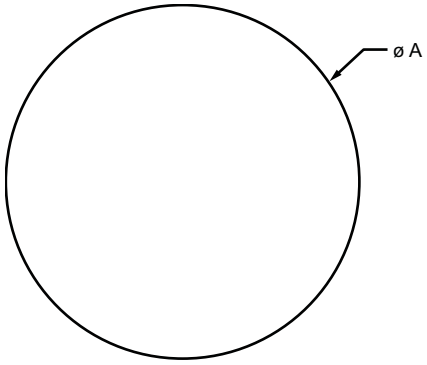

Part No.	Full Length	Series	Material	Grade	Finish	Process	Color	A	Weight
5010	145”	F	Carbon Steel	1045	Non-Plated	Drawn, Ground, and Polished	Unfinished	1.000”	.230 lb / in.
5020	145”	F						1.500”	.500 lb / in.
5030	145”	F						2.000”	.890 lb / in.

Angle Profile

Part Description:

The angle profile can be cut to your desired length. There are options available in a mill or anodize finish. The angle profile is commonly used for custom corner brackets, part bin supports, and tool hangers. See page 860 for the cut-to-length machining service.

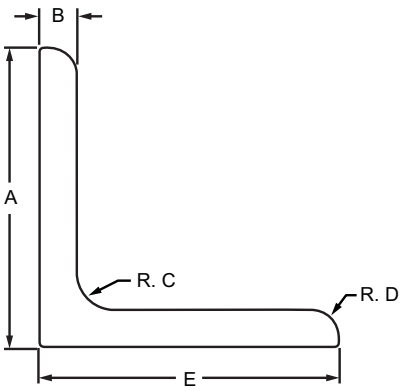

Part No.													
Clear Anodize*	Natural Mill	Black Anodize*	Full Length	Series	Material	Alloy**	Process	A	B	C	D	E	Weight
8210	8211	8211-Black	144"	F				1.000"	.125"	.125"	.093"	1.000"	.023 lb / in.
8217	8218	8218-Black	145"	F				1.000"	.188"	.125"	.188"	1.000"	.033 lb / in.
8212	8213	8213-Black	145"	F				2.000"	.188"	.125"	.188"	1.000"	.053 lb / in.
8215	8216	8216-Black	144"	F				1.500"	.188"	.125"	.188"	1.500"	.052 lb / in.
8220	8221	8221-Black	145"	F				1.500"	.250"	.312"	.250"	1.500"	.067 lb / in.
8230	8231	8231-Black	145"	F				3.000"	.250"	.312"	.250"	1.500"	.114 lb / in.
8222	8223	8223-Black	145"	F				2.000"	.188"	.125"	.188"	2.000"	.070 lb / in.
8225	8226	8226-Black	144"	F				2.500"	.188"	.125"	.188"	2.500"	.090 lb / in.
8232	8233	8233-Black	145"	F				3.000"	.188"	.125"	.188"	3.000"	.106 lb / in.
8235	8236	8236-Black	145"	F				3.000"	.250"	.312"	.250"	3.000"	.140 lb / in.
8240	8241	8241-Black	145"	F				4.500"	.250"	.312"	.250"	4.500"	.218 lb / in.
20-8210	20-8211	20-8211-Black	4M	M				20.00mm	3.00mm	2.00mm	2.00mm	20.00mm	.0007 kg / mm
20-8212	20-8213	20-8213-Black	4M	M	Aluminum	6105-T5	Extruded	40.00mm	3.00mm	2.00mm	2.00mm	20.00mm	.0013 kg / mm
25-8210	25-8211	25-8211-Black	4M	M				25.00mm	3.00mm	3.00mm	3.00mm	25.00mm	.0004 kg / mm
25-8217	25-8218	25-8218-Black	4M	M				25.00mm	4.00mm	3.00mm	4.00mm	25.00mm	.0005 kg / mm
25-8212	25-8213	25-8213-Black	4M	M				50.00mm	4.00mm	3.00mm	4.00mm	25.00mm	.0007 kg / mm
25-8222	25-8223	25-8223-Black	4M	M				50.00mm	4.00mm	3.00mm	4.00mm	50.00mm	.0010 kg / mm
30-8220	30-8221	30-8221-Black	4M	M				30.00mm	4.00mm	3.50mm	3.50mm	30.00mm	.0013 kg / mm
30-8230	30-8231	30-8231-Black	4M	M				60.00mm	4.00mm	3.50mm	3.50mm	30.00mm	.0020 kg / mm
40-8220	40-8221	40-8221-Black	4M	M				40.00mm	6.00mm	8.00mm	6.00mm	40.00mm	.0012 kg / mm
40-8230	40-8231	40-8231-Black	4M	M				80.00mm	6.00mm	8.00mm	6.00mm	40.00mm	.0018 kg / mm
40-8235	40-8236	40-8236-Black	4M	M				80.00mm	6.00mm	8.00mm	6.00mm	80.00mm	.0025 kg / mm
45-8220	45-8221	45-8221-Black	4M	M				45.00mm	6.00mm	6.00mm	6.00mm	45.00mm	.0030 kg / mm
45-8230	45-8231	45-8231-Black	4M	M				90.00mm	6.00mm	6.00mm	6.00mm	45.00mm	.0047 kg / mm
45-8235	45-8236	45-8236-Black	4M	M				90.00mm	6.00mm	6.00mm	6.00mm	90.00mm	.0063 kg / mm

* Longer lead times apply

** Or comparable

CONTINUE

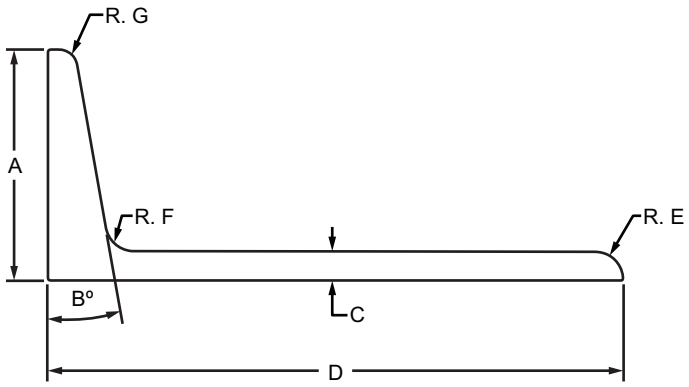

Part No.												
Clear*	Natural	Black*	Full Length	Series	A	B	C	D	E	F	G	Weight
8415	8416	8416-Black	145"	F	2.000"	10º	.250"	5.000"	.250"	.250"	.156"	.0083 lb / in.
65-8415	65-8416	65-8416-Black	4M	M	56.00mm	10º	6.00mm	140.00mm	6.00mm	6.00mm	4.00mm	.0038 kg / mm

* Longer lead times apply

Material Specifications

Part No.	Material	Alloy*	Finish	Process
8415	Aluminum	6105-T5	Anodize	Extruded
8416			Mill	
8416-Black			Anodize	
65-8415			Anodize	
65-8416			Mill	
65-8416-Black			Anodize	

* Or comparable

45 Degree Gusset Profile

Part Description:

The 45 degree gusset profile can be cut to your desired length. There are options available in a mill or anodize finish. It is commonly used for custom 90 degree connections as well as floor mounts and supports. See page 860 for the cut-to-length machining service.

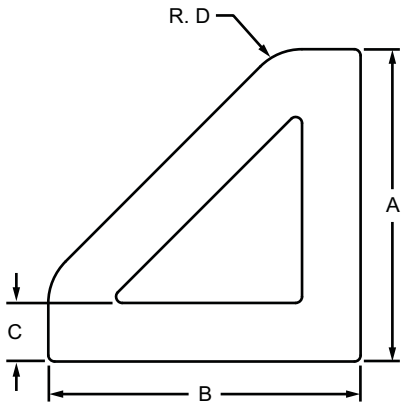

Part No.												
Clear Anodize*	Natural Mill	Black Anodize*	Full Length	Series	Material	Alloy**	Process	A	B	C	D	Weight
8620	8621	8621-Black	145"	F	Aluminum	6105-T5	Extruded	1.000"	1.000"	.188"	.188"	.052 lb / in.
8630	8631	8631-Black	145"	F				1.500"	1.500"	.250"	.250"	.106 lb / in.
8625	8626	8626-Black	145"	F				2.000"	2.000"	.188"	.188"	.116 lb / in.
8635	8636	8636-Black	145"	F				3.000"	3.000"	.250"	.250"	.234 lb / in.
25-8620	25-8621	25-8621-Black	4M	M				25.00mm	25.00mm	4.00mm	4.00mm	.0008 kg / mm
25-8625	25-8626	25-8626-Black	4M	M				50.00mm	50.00mm	4.00mm	4.00mm	.0017 kg / mm
30-8630	30-8631	30-8631-Black	4M	M				30.00mm	30.00mm	4.00mm	4.00mm	.0021 kg / mm
30-8635	30-8636	30-8636-Black	4M	M				60.00mm	60.00mm	4.00mm	4.00mm	.0046 kg / mm
40-8630	40-8631	40-8631-Black	4M	M				40.00mm	40.00mm	6.00mm	6.00mm	.0019 kg / mm
40-8635	40-8636	40-8636-Black	4M	M				80.00mm	80.00mm	6.00mm	6.00mm	.0040 kg / mm
45-8630	45-8631	45-8631-Black	4M	M				45.00mm	45.00mm	6.00mm	6.00mm	.0047 kg / mm
45-8635	45-8636	45-8636-Black	4M	M				90.00mm	90.00mm	6.00mm	6.00mm	.0102 kg / mm

* Longer lead times apply

** Or comparable

Part Description:

The deadbolt latch profile can be cut to your desired length. It is strong and corrosion-resistant, ideal for a deadbolt latch in guarding and enclosure applications. There are options available in a mill or anodize finish. See page 860 for the cut-to-length machining service.

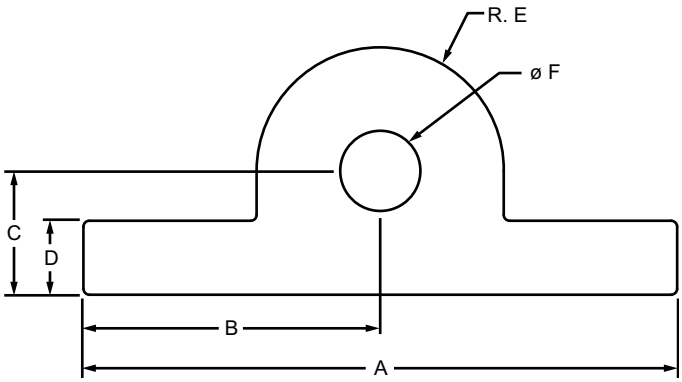

Part No.											
Clear*	Natural	Black*	Full Length	Series	A	B	C	D	E	F	Weight
8560	8561	8561-Black	145"	F	1.500"	.750"	.313"	.187"	.312"	.201"	.048 lb / in.

* Longer lead times apply

Material Specifications

Part No.	Material	Alloy*	Finish	Process
8560	Aluminum	6105-T5	Anodize	Extruded
8561			Mill	
8561-Black			Anodize	

* Or comparable

Standard Nub Profile

Part Description:

The standard nub profile can be cut to your desired length. There are options available in a mill or anodize finish. It is commonly used for custom pivot nubs and assemblies. See page 860 for the cut-to-length machining service.

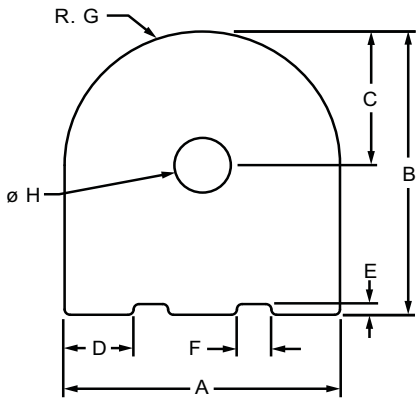

Part No.													
Clear*	Natural	Black*	Full Length	Series	A	B	C	D	E	F	G	H	Weight
8547	8548	8548-Black	145”	F	1.000”	1.060”	.500”	.250”	.040”	.125”	.500”	.205”	.091 lb / in.
8545	8546	8546-Black	145”	F	1.500”	1.600”	.750”	.314”	.080”	.279”	.750”	.265”	.205 lb / in.
25-8547	25-8548	25-8548-Black	4M	M	25.00mm	27.00mm	12.50mm	6.40mm	2.00mm	2.90mm	12.50mm	5.00mm	.0016 kg / mm
40-8545	40-8546	40-8546-Black	4M	M	40.00mm	42.50mm	20.00mm	8.00mm	2.13mm	8.00mm	20.00mm	6.60mm	.0039 kg / mm

* Longer lead times apply

Material Specifications

Part No.	Material	Alloy*	Finish	Process
8547	Aluminum	6105-T5	Anodize	Extruded
8548			Mill	
8548-Black			Anodize	
8545			Anodize	
8546			Mill	
8546-Black			Anodize	
25-8547			Anodize	
25-8548			Mill	
25-8548-Black			Anodize	
40-8545			Anodize	
40-8546			Mill	
40-8546-Black			Anodize	

* Or comparable

Part Description:

The right angle nub profile can be cut to your desired length. There are options available in a mill or anodize finish. It is commonly used for custom pivot nubs and assemblies. See page 860 for the cut-to-length machining service.

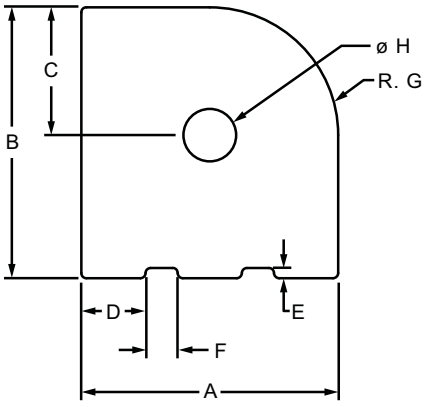

Part No.													
Clear*	Natural	Black*	Full Length	Series	A	B	C	D	E	F	G	H	Weight
8445	8446	8446-Black	145"	F	1.000"	1.060"	.500"	.250"	.040"	.125"	.500"	.205"	.096 lb / in.
8448	8449	8449-Black	145"	F	1.500"	1.600"	.750"	.314"	.080"	.279"	.750"	.265"	.218 lb / in.
25-8445	25-8446	25-8446-Black	4M	M	25.00mm	27.00mm	12.50mm	6.40mm	1.10mm	2.90mm	12.50mm	5.00mm	.0017 kg / mm
40-8448	40-8449	40-8449-Black	4M	M	40.00mm	42.50mm	20.00mm	8.00mm	2.13mm	8.00mm	20.00mm	6.80mm	.0041 kg / mm

* Longer lead times apply

Material Specifications

Part No.	Material	Alloy*	Finish	Process
8445	Aluminum	6105-T5	Anodize	Extruded
8446			Mill	
8446-Black			Anodize	
8448			Anodize	
8449			Mill	
8449-Black			Anodize	
25-8445			Anodize	
25-8446			Mill	
25-8446-Black			Anodize	
40-8448			Anodize	
40-8449			Mill	
40-8449-Black			Anodize	

* Or comparable

Hinge Profile

Part Description:

The hinge profile can be cut to your desired length. There are options available in a mill or anodize finish. It is commonly used to create custom hinge mounts for heavier-duty applications. It is also corrosion-resistant, making it useful for outdoor applications. See page 860 for the cut-to-length machining service.

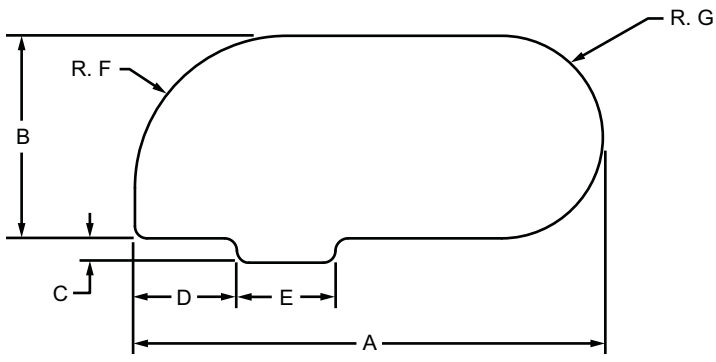

Part No.												
Clear*	Natural	Black*	Full Length	Series	A	B	C	D	E	F	G	Weight
8550	8551	8551-Black	145"	F	1.156"	.500"	.060"	.252"	.244"	.375"	.250"	.048 lb / in.
8555	8556	8556-Black	145"	F	1.655"	.500"	.100"	.469"	.309"	.375"	.250"	.075 lb / in.
25-8550	25-8551	25-8551-Black	4M	M	29.00mm	13.00mm	1.50mm	6.35mm	6.20mm	9.35mm	6.50mm	.0009 kg / mm
40-8555	40-8556	40-8556-Black	4M	M	43.94mm	13.00mm	2.60mm	12.90mm	7.85mm	9.50mm	6.50mm	.0014 kg / mm

* Longer lead times apply

Material Specifications

Part No.	Material	Alloy*	Finish	Process
8550	Aluminum	6105-T5	Anodize	Extruded
8551			Mill	
8551-Black			Anodize	
8555			Anodize	
8556			Mill	
8556-Black			Anodize	
25-8550			Anodize	
25-8551			Mill	
25-8551-Black			Anodize	
40-8555			Anodize	
40-8556			Mill	
40-8556-Black			Anodize	

* Or comparable

Part Description:

The roll-in panel mount bracket profile can be cut to your desired length. There are options available in a mill or anodize finish. It is commonly used to create custom panel mounts and is designed to be used even when profiles are captivated. See page 860 for the cut-to-length machining service.

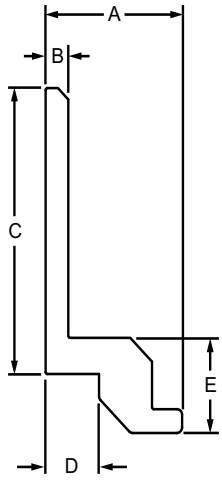

Part No.										
Clear*	Natural	Black*	Full Length	Series	A	B	C	D	E	Weight
8592	8591	8591-Black	145”	F M	.573”	.130”	1.000”	.217”	.335”	.022 lb / in.
8594	8593	8593-Black	145”	F M	.782”	.130”	1.500”	.306”	.500”	.050 lb / in.

* Longer lead times apply

Material Specifications

Part No.	Material	Alloy*	Finish	Process
8592	Aluminum	6105-T5	Anodize	Extruded
8591			Mill	
8591-Black			Anodize	
8594			Anodize	
8593			Mill	
8593-Black			Anodize	

* Or comparable

Panel Mount Block Profile

Part Description:

The panel mount block profile can be cut to your desired length. There are options available in a mill or anodize finish. It is commonly used to mount a panel flush with a profile edge or on the profile surface. There is a slot tab on the block that acts to align the mount in the T-slot. When used in this capacity, the panel mount block increases stability of the mounted panel while also reducing vibration. See page 860 for the cut-to-length machining service.

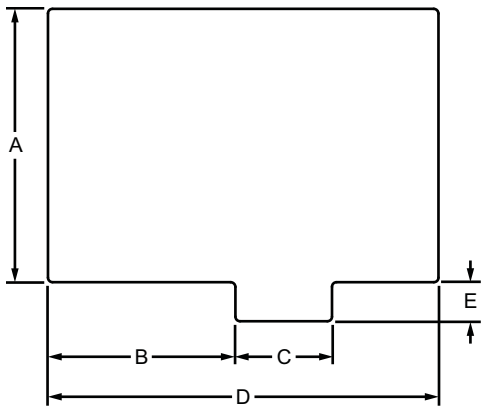

Part No.										
Clear*	Natural	Black*	Full Length	Series	A	B	C	D	E	Weight
8567	8568	8568-Black	145"	F	.700"	.370"	.250"	.812"	.050"	.058 lb / in.
8565	8566	8566-Black	145"	F	.875"	.600"	.309"	1.250"	.125"	.113 lb / in.
25-8567	25-8568	25-8568-Black	4M	M	19.00mm	9.30mm	6.30mm	20.32mm	1.30mm	.0011 kg / mm
40-8565	40-8566	40-8566-Black	4M	M	23.20mm	16.21mm	7.87mm	34.28mm	3.30mm	.0022 kg / mm

* Longer lead times apply

Material Specifications

Part No.	Material	Alloy*	Finish	Process
8567	Aluminum	6105-T5	Anodize	Extruded
8568			Mill	
8568-Black			Anodize	
8565			Anodize	
8566			Mill	
8566-Black			Anodize	
25-8567			Anodize	
25-8568			Mill	
25-8568-Black			Anodize	
40-8565			Anodize	
40-8566			Mill	
40-8566-Black			Anodize	

* Or comparable

Part Description:

The clamp block profile can be cut to your desired length. It is strong yet lightweight, and is commonly used to create custom fasteners for connecting profiles at various angles. When used in this capacity it is a repositionable and reusable fastening option. See page 860 for the cut-to-length machining service.

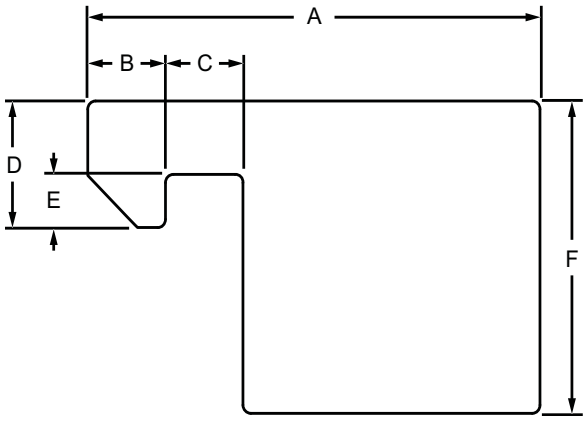

Part No.											
Clear*	Natural	Black*	Full Length	Series	A	B	C	D	E	F	Weight
8418	8417	8417-Black	145”	10	.710”	.100”	.110”	.215”	.075”	.500”	.017 lb / in.
8426	8427	8427-Black	145”	15	1.142”	.196”	.196”	.304”	.128”	.750”	.029 lb / in.

* Longer lead times apply

Material Specifications

Part No.	Material	Alloy*	Finish	Process
8418	Aluminum	6105-T5	Anodize	Extruded
8417			Mill	
8417-Black			Anodize	
8426			Anodize	
8427			Mill	
8427-Black			Anodize	

* Or comparable

Single Flange Bearing Profile

Part Description:

The single flange bearing profile can be cut to your desired length. There are options available in a mill or anodize finish. It is commonly used in custom linear motion applications. See page 860 for the cut-to-length machining service.

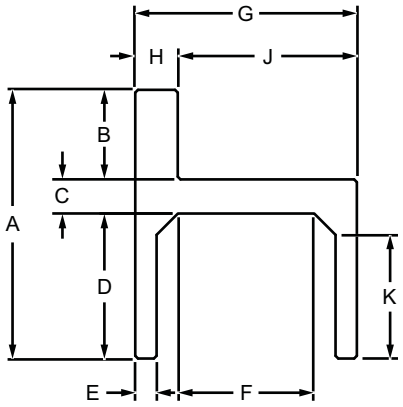

Part No.															
Clear*	Natural	Black*	Full Length	Series	A	B	C	D	E	F	G	H	J	K	Weight
8520	8521	8521-Black	145"	10	1.968"	.656"	.250"	1.062"	.156"	1.000"	1.624"	.311"	1.313"	.906"	.093 lb / in.
8530	8531	8531-Black	145"	15	2.750"	.750"	.375"	1.625"	.250"	1.379"	2.505"	.500"	2.005"	1.312"	.222 lb / in.
25-8520	25-8521	25-8521-Black	4M	25	49.73mm	16.48mm	5.99mm	27.25mm	3.99mm	25.22mm	41.12mm	7.98mm	33.14mm	23.29mm	.0016 kg / mm
40-8530	40-8531	40-8531-Black	4M	40	71.83mm	19.00mm	8.99mm	43.84mm	6.15mm	36.98mm	65.13mm	11.99mm	53.14mm	35.92mm	.0038 kg / mm

* Longer lead times apply

Material Specifications

Part No.	Material	Alloy*	Finish	Process
8520	Aluminum	6105-T5	Anodize	Extruded
8521			Mill	
8521-Black			Anodize	
8530			Anodize	
8531			Mill	
8531-Black			Anodize	
25-8520			Anodize	
25-8521			Mill	
25-8521-Black			Anodize	
40-8530			Anodize	
40-8531			Mill	
40-8531-Black			Anodize	

* Or comparable

Part Description:

The double flange bearing profile can be cut to your desired length. There are options available in a mill or anodize finish. It is commonly used in custom linear motion applications. See page 860 for the cut-to-length machining service.

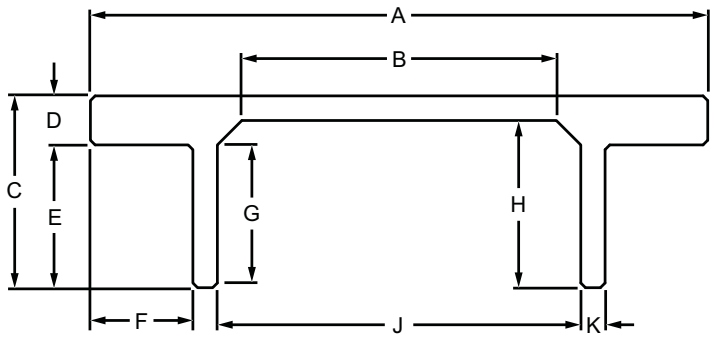

Part No.															
Clear*	Natural	Black*	Full Length	Series	A	B	C	D	E	F	G	H	J	K	Weight
8525	8526	8526-Black	145"	10	2.936"	1.000"	1.218"	.312"	.906"	.656"	.886"	1.062"	1.312"	.156"	.098 lb / in.
8527	8528	8528-Black	145"	10	3.938"	2.006"	1.218"	.312"	.906"	.654"	.876"	1.062"	2.318"	.156"	.117 lb / in.
8535	8536	8536-Black	145"	15	4.001"	1.379"	1.875"	.375"	1.500"	.748"	1.282"	1.625"	2.005"	.250"	.209 lb / in.
8540	8541	8541-Black	145"	15	5.501"	2.878"	1.875"	.375"	1.500"	.748"	1.282"	1.625"	3.504"	.250"	.247 lb / in.
25-8525	25-8526	25-8526-Black	4M	25	74.09mm	25.15mm	31.20mm	8.00mm	23.20mm	16.47mm	22.44mm	27.20mm	33.15mm	4.00mm	.0018 kg / mm
25-8527	25-8528	25-8528-Black	4M	25	99.26mm	50.34mm	31.20mm	8.00mm	23.20mm	16.47mm	22.44mm	27.20mm	58.32mm	4.00mm	.0020 kg / mm
40-8535	40-8536	40-8536-Black	4M	40	103.12mm	36.82mm	50.00mm	9.00mm	41.00mm	19.00mm	35.08mm	43.84mm	52.82mm	6.15mm	.0036 kg / mm
40-8540	40-8541	40-8541-Black	4M	40	143.31mm	77.01mm	50.00mm	9.00mm	41.00mm	19.00mm	35.08mm	43.84mm	93.01mm	6.15mm	.0042 kg / mm
45-8536	45-8537	45-8537-Black	4M	45	120.00mm	40.00mm	56.40mm	9.50mm	46.90mm	24.78mm	40.48mm	49.30mm	57.64mm	6.40mm	.0046 kg / mm

* Longer lead times apply

Material Specifications

Part No.	Material	Alloy*	Finish	Process
8525	Aluminum	6005A-T61	Anodize	Extruded
8526			Mill	
8526-Black			Anodize	
8527			Anodize	
8528			Mill	
8528-Black			Anodize	
8535			Anodize	
8536			Mill	
8536-Black			Anodize	
8540			Anodize	
8541			Mill	
8541-Black			Anodize	
25-8525			Anodize	
25-8526			Mill	

Part No.	Material	Alloy*	Finish	Process
25-8526-Black	Aluminum	6005A-T61	Anodize	Extruded
25-8527			Anodize	
25-8526			Mill	
25-8528-Black			Anodize	
40-8535			Anodize	
40-8536			Mill	
40-8536-Black			Anodize	
40-8540			Anodize	
40-8541			Mill	
40-8541-Black			Anodize	
45-8536			Anodize	
45-8537			Mill	
45-8537-Black			Anodize	

* Or comparable

Single Flange UniBearing™ Profile

Part Description:

The single flange UniBearing™ profile can be cut to your desired length. There are options available in a mill or anodize finish. It is commonly used in custom linear bearing applications when there is one guiderail. See page 860 for the cut-to-length machining service.

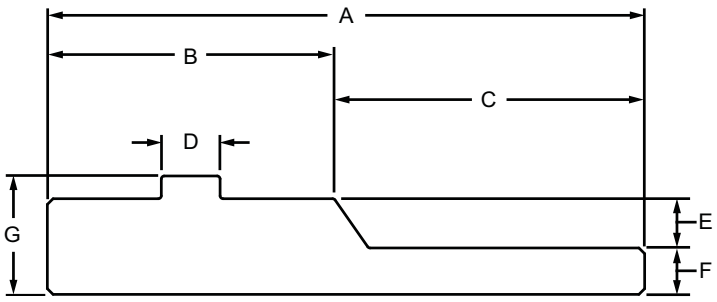

Part No.												
Clear*	Natural	Black*	Full Length	Series	A	B	C	D	E	F	G	Weight
8580	8581	8581-Black	145"	F	2.063"	1.000"	1.063"	.244"	.156"	.156"	.372"	.050 lb / in.
8582	8583	8583-Black	145"	F	3.125"	1.500"	1.625"	.308"	.260"	.245"	.625"	.122 lb / in.
25-8580	25-8581	25-8581-Black	3.683M	M	52.40mm	25.40mm	27.00mm	6.20mm	3.96mm	3.96mm	9.45mm	.0009 kg / mm
40-8582	40-8583	40-8583-Black	4M	M	82.45mm	38.10mm	41.28mm	7.82mm	6.60mm	6.22mm	15.88mm	.0021 kg / mm

* Longer lead times apply

Material Specifications

Part No.	Material	Alloy*	Finish	Process
8580	Aluminum	6105-T5	Anodize	Extruded
8581			Mill	
8581-Black			Anodize	
8582			Anodize	
8583			Mill	
8583-Black			Anodize	
25-8580			Anodize	
25-8581			Mill	
25-8581-Black			Anodize	
40-8582			Anodize	
40-8583			Mill	
40-8583-Black			Anodize	

* Or comparable

Part Description:

The double flange UniBearing™ profile can be cut to your desired length. There are options available in a mill or anodize finish. It is commonly used in custom linear bearing applications when there are two guiderails. See page 860 for the cut-to-length machining service.

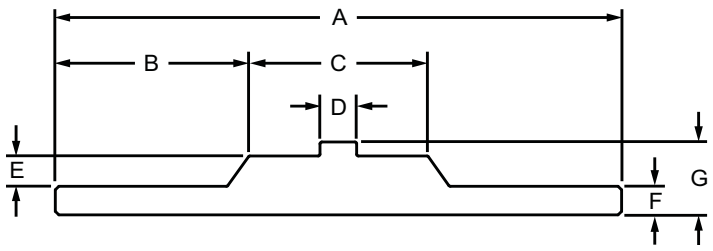

Part No.												
Clear*	Natural	Black*	Full Length	Series	A	B	C	D	E	F	G	Weight
8584	8585	8585-Black	145"	F	3.125"	1.063"	.998"	.244"	.156"	.156"	.372"	.068 lb / in.
8586	8587	8587-Black	145"	F	4.750"	1.625"	1.493"	.308"	.260"	.245"	.625"	.164 lb / in.
25-8584	25-8585	25-8585-Black	3.683M	M	79.38mm	27.00mm	25.35mm	6.20mm	4.00mm	4.00mm	9.45mm	.0012 kg / mm
40-8586	40-8587	40-8587-Black	4M	M	124.78mm	41.28mm	37.92mm	7.82mm	6.60mm	6.22mm	15.88mm	.0065 kg / mm

* Longer lead times apply

Material Specifications

Part No.	Material	Alloy*	Finish	Process
8584	Aluminum	6105-T5	Anodize	Extruded
8585			Mill	
8585-Black			Anodize	
8586			Anodize	
8587			Mill	
8587-Black			Anodize	
25-8584			Anodize	
25-8585			Mill	
25-8585-Black			Anodize	
40-8586			Anodize	
40-8587			Mill	
40-8587-Black			Anodize	

* Or comparable

Single Retainer Profile

Part Description:

The single retainer profile can be cut to your desired length. There are options available in mill or anodize finish. It is commonly used to mount a panel or mesh when it is recessed within the T-slot or on the profile frame. When used in this capacity it is a strong fastening option that is simple to use, provides stability, and reduces vibration. The single retainer profile is also frequently used when mounting one panel or mesh to a T-slot profile or in instances when larger profile series are used to mount two panels or mesh. See page 860 for the cut-to-length machining service.

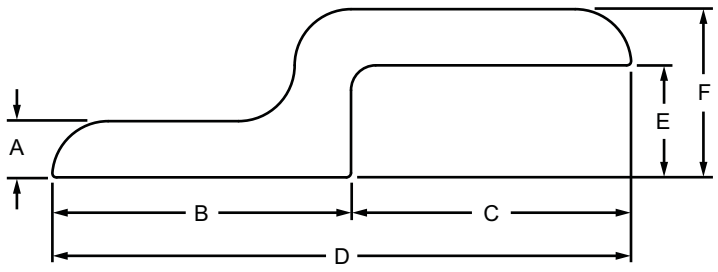

Part No.											
Clear*	Natural	Black*	Full Length	Series	A	B	C	D	E	F	Weight
8515	8516	8516-Black	145"	F	.188"	1.000"	.938"	1.938"	.375"	.563"	.042 lb / in.
8510	8511	8511-Black	145"	F	.250"	1.500"	1.379"	2.879"	.590"	.840"	.093 lb / in.
20-8515	20-8516	20-8516-Black	4M	M	3.00mm	20.00mm	19.00mm	39.00mm	7.19mm	10.19mm	.0008 kg / mm
25-8515	25-8516	25-8516-Black	4M	M	4.00mm	25.00mm	23.50mm	48.50mm	9.30mm	13.30mm	.0010 kg / mm
30-8515	30-8516	30-8516-Black	4M	M	4.00mm	30.00mm	28.00mm	58.00mm	10.59mm	14.58mm	.0016 kg / mm
40-8510	40-8511	40-8511-Black	4M	M	6.00mm	40.00mm	37.00mm	77.00mm	15.95mm	21.95mm	.0030 kg / mm
45-8510	45-8511	45-8511-Black	4M	M	6.00mm	45.00mm	41.98mm	86.98mm	17.29mm	23.29mm	.0036 kg / mm

* Longer lead times apply

Material Specifications

Part No.	Material	Alloy*	Finish	Process
8515	Aluminum	6105-T5	Anodize	Extruded
8516			Mill	
8516-Black			Anodize	
8510			Anodize	
8511			Mill	
8511-Black			Anodize	
20-8515			Anodize	
20-8516			Mill	
20-8516-Black			Anodize	
25-8515			Anodize	
25-8516			Mill	
25-8516-Black			Anodize	

Part No.	Material	Alloy*	Finish	Process
30-8515	Aluminum	6105-T5	Anodize	Extruded
30-8516			Mill	
30-8516-Black			Anodize	
40-8510			Anodize	
40-8511			Mill	
40-8511-Black			Anodize	
45-8510			Anodize	
45-8511			Mill	
45-8511-Black			Anodize	

* Or comparable

Part Description:

The double retainer profile can be cut to your desired length. There are options available in mill or anodize finish. It is commonly used to mount a panel or mesh when it is recessed within the T-slot or on the profile frame. When used in this capacity it is a strong fastening option that is simple to use, provides stability, and reduces vibration. The double retainer profile is also frequently used to create a custom retainer in instances when a T-slot profile is connecting two adjacent panels. See page 860 for the cut-to-length machining service.

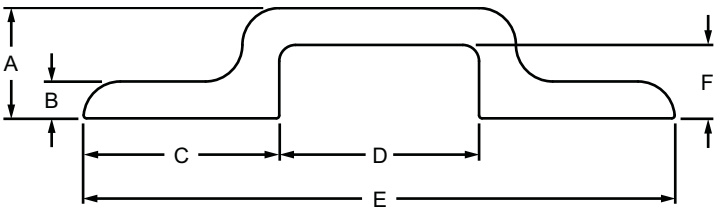

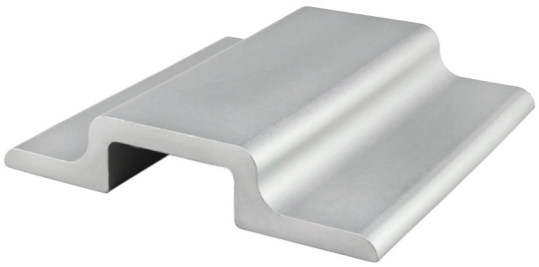

Part No.											
Clear*	Natural	Black*	Full Length	Series	A	B	C	D	E	F	Weight
8610	8611	8611-Black	145"	F	.563"	.188"	1.000"	1.020"	3.020"	.375"	.100 lb / in.
8512	8513	8513-Black	145"	F	.840"	.250"	1.500"	1.523"	4.523"	.590"	.142 lb / in.
25-8610	25-8611	25-8611-Black	4M	M	13.30mm	4.00mm	25.00mm	25.50mm	75.50mm	9.30mm	.0020 kg / mm
40-8512	40-8513	40-8513-Black	4M	M	21.95mm	6.00mm	40.00mm	40.59mm	120.59mm	15.95mm	.0060 kg / mm

* Longer lead times apply

Material Specifications

Part No.	Material	Alloy*	Finish	Process
8610	Aluminum	6105-T5	Anodize	Extruded
8611			Mill	
8611-Black			Anodize	
8512			Anodize	
8513			Mill	
8513-Black			Anodize	
25-8610			Anodize	
25-8611			Mill	
25-8611-Black			Anodize	
40-8512			Anodize	
40-8513			Mill	
40-8513-Black			Anodize	

* Or comparable

Storage Bin Hanger Profile

Part Description:

The storage bin hanger profile is typically used to mount storage bins (page 813) to an application. It is made of aluminum and available in mill or anodize finish. The storage bin profile can be cut to your desired length. See page 860 for the cut-to-length machining service.

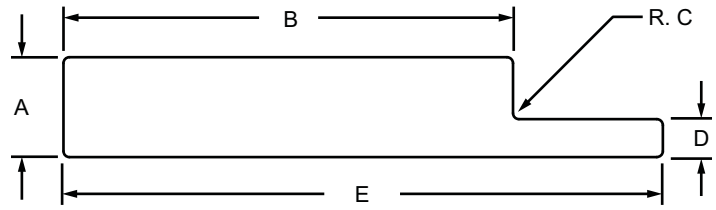

Part No.										
Clear*	Natural	Black*	Full Length	Series	A	B	C	D	E	Weight
8507	8508	8508-Black	145"	F M	.250"	1.125"	.015"	.095"	1.500"	.030 lb / in.

* Longer lead times apply

Material Specifications

Part No.	Material	Alloy*	Finish	Process
8507	Aluminum	6105-T5	Anodize	Extruded
8508			Mill	
8508-Black			Anodize	

* Or comparable

Part Description:

The panel stiffener profile can be cut to your desired length. It is made of aluminum, meaning it is strong, lightweight and corrosion-resistant. It is available with or without a handle and is commonly used to add rigidity to large .250" (6.35mm) thick panels. It easily connects to a panel using only a soft-faced mallet. See page 860 for the cut-to-length machining service.

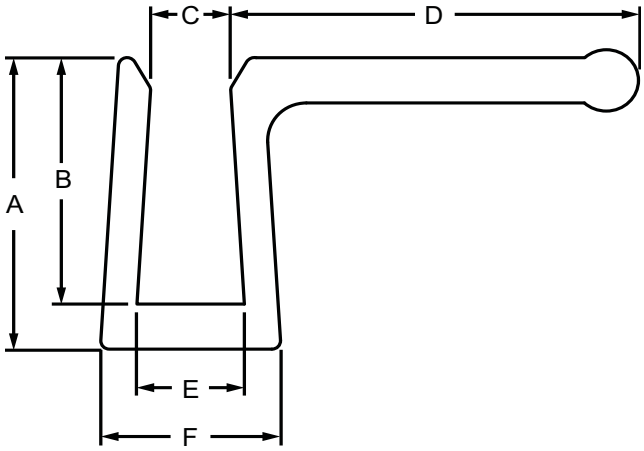

Part No.											
Clear Anodize	Black Anodize*	Handle	Full Length	Series	A	B	C	D	E	F	Weight
8570	8570-Black	Yes	145"	F	.710"	.600"	.182"	.953"	.245"	.420"	.025 lb / in.
8575	8575-Black	No	145"	F	.710"	.600"	.182"	—	.245"	.417"	.014 lb / in.
65-8570	65-8570-Black	Yes	3.68M	M	18.03mm	15.24mm	4.62mm	24.21mm	6.22mm	10.67mm	.0004 kg / mm
65-8575	65-8575-Black	No	3.68M	M	18.03mm	15.24mm	4.62mm	—	6.22mm	10.59mm	.0003 kg / mm

* Longer lead times apply

Material Specifications

Material	Alloy*	Process
Aluminum	6105-T5	Extruded

* Or comparable

Tube Insert Profile

Part Description:

The tube insert profile can be cut to your desired length. It is made of aluminum, meaning it is strong, lightweight and corrosion-resistant. It is commonly used to create a custom connector for Ready Tube® profiles. See page 860 for the cut-to-length machining service.

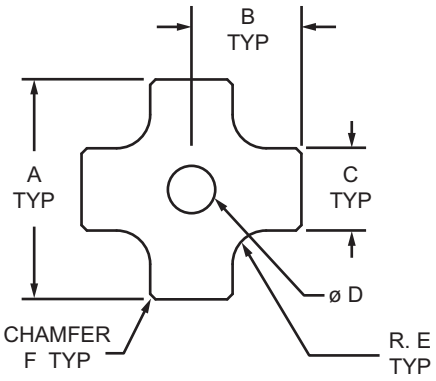

Part No.	Full Length	Series	A	B	C	D	E	F	Weight
9750	145"	RT	1.225"	.612"	.459"	.262"	.187"	.030" X 45°	.068 lb / in.

Material Specifications

Material	Alloy*	Finish	Process
Aluminum	6105-T5	Clear Anodize	Extruded

* Or comparable

Pictorial Table Of Contents

T-Slot Profile Cut to Length

Page 859

RT & QF Profile Cut to Length

Page 860

Shaped Profile Cut to Length
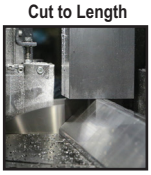
Page 860

Tap Profile End

Page 861

Access Hole
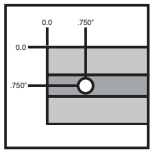

Page 863

Anchor Fastener Counterbore
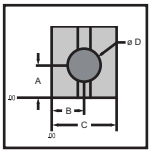

Page 865

Butt Fastener Counterbore
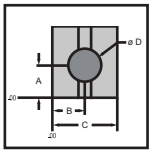

Page 865

Drill Thru & Counterbore
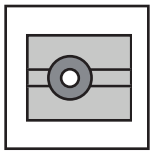
Page 866

Profile Miter Cut
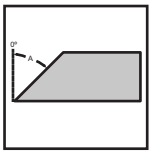

Page 868

Profile Miter Cut Worksheet
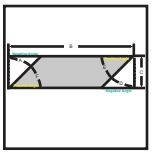
Page 869

Miter Cut Counterbore
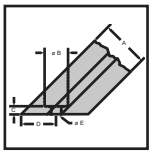

Page 870

Profile Miter Cut with Counterbore
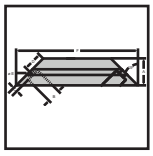
Page 871

Clearance Drill Thru in T-Slot
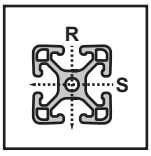

Page 872

Clearance Drill Thru Between T-Slots
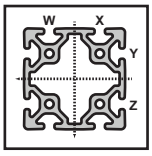

Page 873

Deluxe Door Handle Profile Milling
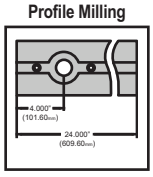

Page 874

Furniture Style Door Handle Profile Milling
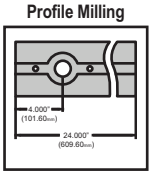

Page 875

Miter Connector Profile Milling
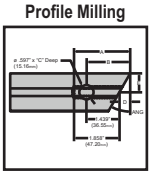
Page 876

T-Nut Clearance Profile Milling
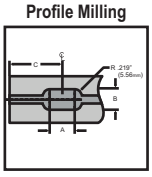

Page 877

Central Connector Profile Milling
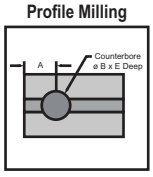

Page 878

Manifold Access Profile Milling
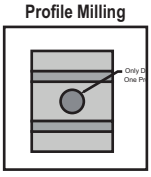
Page 879

Bolt Connector Profile Milling
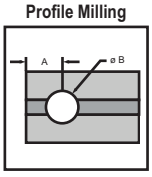

Page 880

Brake Holes for Linear Bearings
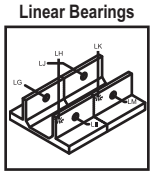

Page 881

45 Degree Flange Milling
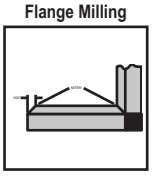
Page 883

Connector Rod End Tap
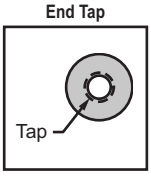

Page 883

Panel Cut-to-Size

Page 884

T-Slot Access Routing
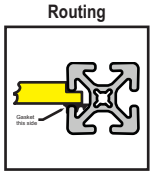
Page 885

Edge Radius
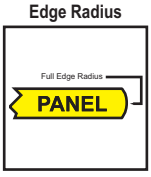

Page 886

Corner Radius
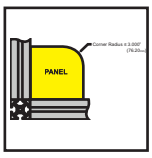

Page 887

Profile Corner Clearance Notch
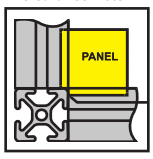

Page 888

Full Profile Corner Clearance Notch
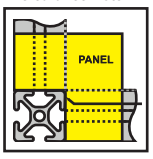

Page 889

End Fastener Clearance Notch
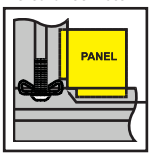

Page 890

Anchor Fastener Clearance Notch
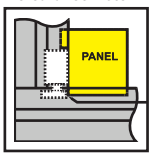

Page 891

Central Connector Clearance Notch
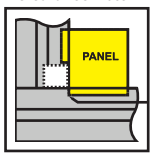

Page 892

Corner Connector Clearance Notch
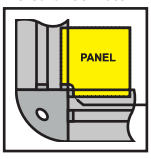

Page 893

Inside Corner Connector Clearance Notch
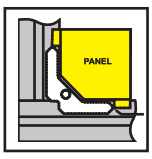

Page 894

CONTINUE

Pictorial Table Of Contents

Hidden Corner Connector Clearance Notch

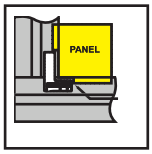

Page 895

Bolt Connector Clearance Notch

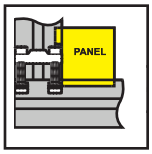

Page 896

Plate Connector Clearance Notch

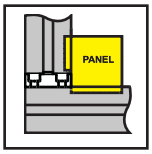

Page 896

Grabber™ Door Catch Panel Milling

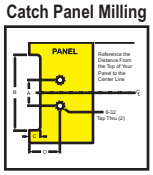

Page 897

Locking Grabber™ Handle Panel Milling

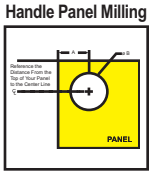

Page 897

Flush Handle Panel Milling

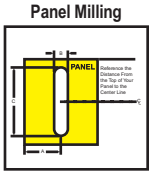

Page 898

Adjustable Tension and Detent Hinge Panel Milling

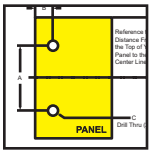

Page 899

Plastic / Steel Door Handle Panel Milling

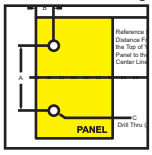

Page 900

Panel Mount Block Panel Milling

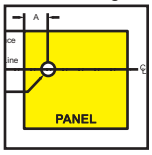

Page 901

Panel Retainer Milling

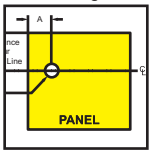

Page 902

Plastic Panel / Aluminum Plate Cutout

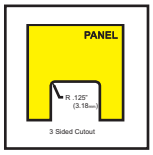

Page 903

Top Mount Milling for Plastic Panel or Aluminum Plate

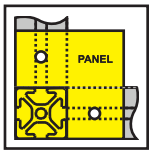

Page 904

Miscellaneous Panel Milling

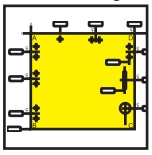

Page 905

Part Description:

The T-slot profile cut-to-length machining service has a tolerance of plus or minus .015" (.38mm) with a squareness tolerance of .002" per inch (.02mm/cm) max. All profiles are washed, dried and wrapped before shipping to provide a clean product.

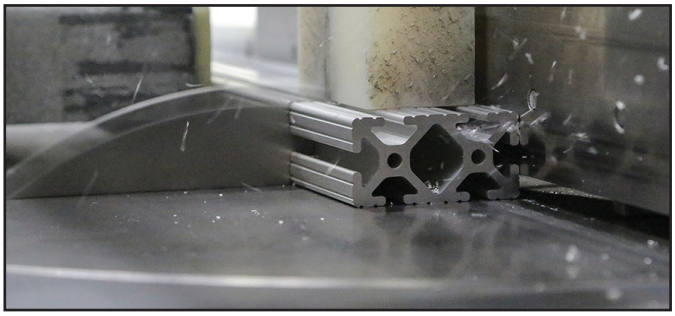

T-Slot Profile Cut to Length

Part No.	Series	Applicable Profiles	Cut Squareness	Cut Tolerance
7005	10	1001, 1001-S, 1002, 1002-S, 1003, 1003-S, 1004, 1004-S, 1010, 1010-S, 1012, 1012-S, 1050	+/- .002" / in	+/- .015"
7000	10	1020, 1020-S, 2012		
7003	10	1030, 1030-S		
7012	10	2020, 2020-S		
7013	10	2040, 2040-S		
7010	15	1501, 1501-LS, 1502, 1502-LS, 1503, 1503-LS, 1504, 1504-LS, 1515, 1515-S, 1515-Lite, 1515-LS, 1515-UL, 1515-ULS, 1517, 1517-LS, 1534-Lite, 1547, 1575		
7020	15	1530, 1530-Lite, 1530-LS, 1530-S, 3034-Lite, 3075		
7021	15	1545, 1545-S, 1545-LS		
7030	15	3030, 3030-Lite, 3030-LS, 3030-S		
7023	15	3060		
20-7005	20	20-2020	+/- .02mm / cm	+/- .38mm
20-7020	20	20-2040		
20-7030	20	20-4040		
25-7005	25	25-2525, 25-2501, 25-2502, 25-2503, 25-2504, 25-2527, 25-2514		
25-7000	25	25-2550, 25-5013		
25-7003	25	25-2576		
25-7012	25	25-5050		
25-7013	25	25-5010		
30-7010	30	30-3001, 30-3002, 30-3003, 30-3004, 30-3030, 30-3022		
30-7020	30	30-3060		
30-7030	30	30-6060		
40-7010	40	40-4001, 40-4002, 40-4003, 40-4004, 40-4040-UL, 40-4040-Lite, 40-4040, 40-4020, 40-4030-Lite, 40-4045-Lite		
40-7020	40	40-4080-UL, 40-4080-Lite, 40-4080, 40-8020, 40-4082-Lite, 40-4083-Lite, 40-4084-Lite, 40-4085-Lite, 40-4093, 40-4094, 40-4096		
40-7021	40	40-4012		
40-7030	40	40-8080		
40-7023	40	40-8016		
45-7010	45	45-4545, 45-4545-Lite		
45-7020	45	45-4590		
45-7030	45	45-9090		

Ready Tube® & Quick Frame® Profile / Structural Shape Cut to Length

Part Description:

The Ready Tube®, Quick Frame® and structural shape cut-to-length machining services have a tolerance of plus or minus .015” (.38mm) with a square tolerance of .002” per inch (.02mm/cm) max. All profiles are washed, dried and wrapped before shipping to provide a clean product.

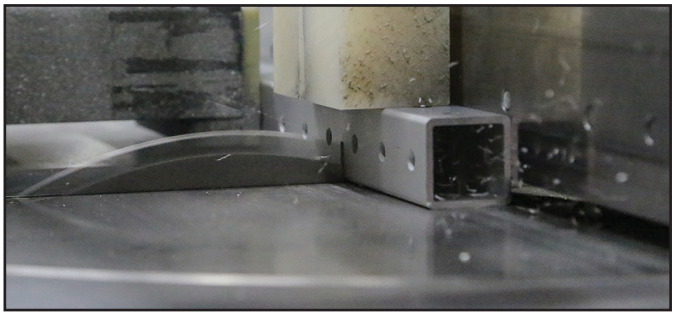

Ready Tube & Quick Frame Profile Cut to Length

Part No.	Series	Applicable Profiles	Cut Squareness	Cut Tolerance
7010	RT	9700, 9701	+/- .002” / in	+/- .015”
7020	RT	9705, 9706, 9725, 9726, 9728		
7310	QF	9000, 9005, 9010, 9015, 9025, 9030, 9035		

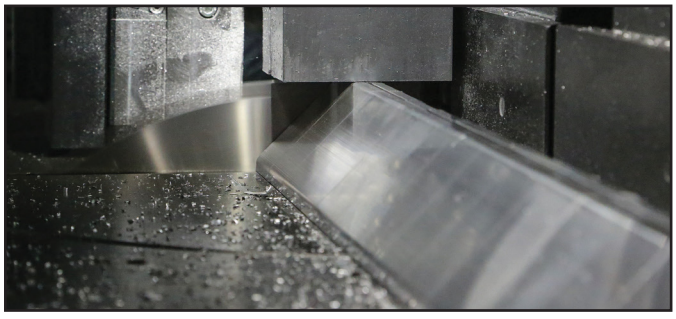

Shaped Profile Cut to Length

Part No.	Series	Service Type	Cut Squareness	Cut Tolerance
7001	F RT	Cut to Length .750” Round Connector Rod	+/- .002” / in	+/- .015”
7205	F	Cut to Length 1.00” Round Tube		
7210	F	Cut to Length 1.50” Round Tube		
7213	F	Cut to Length 2.00” Round Tube		
7212	F	Cut to Length Shapes with **ALL** Profile Sides < 3.250”		
7224	F	Cut to Length Shapes with **ANY** Profile Side ≥ 3.250”		
65-7212	M	Cut to Length Shapes with **ALL** Profile Sides < 82mm	+/- .02mm / cm	+/- .38mm
65-7224	M	Cut to Length Shapes with **ANY** Profile Side ≥ 82mm		

Part Description:

The tap profile end machining service is used to add threads to the extruded holes in a T-slot profile. This enables the insertion of a bolt to mount an end fastener or accessories. There are a wide variety of sizes and depths available. **Additional Information:** When ordering this service, designate which profile end (left, right, or both) requires the tap.

Part No.	Series	Tap Size	Minimum Depth	Service Type	Applicable Profiles
7061	10	1/4-20	1.125"	Single Hole End Tap	1001, 1001-S, 1002, 1002-S, 1003, 1003-S, 1004, 1004-S, 1010, 1010-S, 1012, 1012-S
7063	10	M6 x 1.00	1.125"	Single Hole End Tap	
7006	10	10-32	.875"	Two Hole End Tap	1050
7007	10	M5 x .80	.875"	Two Hole End Tap	
7008	10	10-32	.875"	Two Hole End Tap	2012
7009	10	M5 x .80	.875"	Two Hole End Tap	
7046	10	1/4-20	1.125"	Two Hole End Tap	1020, 1020-S
7047	10	M6 x 1.00	1.125"	Two Hole End Tap	
7036	10	1/4-20	1.125"	Three Hole End Tap	1030, 1030-S
7037	10	M6 x 1.00	1.125"	Three Hole End Tap	
7064	10	1/4-20	1.125"	Four Hole End Tap	2020, 2020-S
7067	10	M6 x 1.00	1.125"	Four Hole End Tap	
7038	10	1/4-20	1.125"	Eight Hole End Tap	2040, 2040-S
7039	10	M6 x 1.00	1.125"	Eight Hole End Tap	
7035	15	1/8 NPT	—	Single Hole End Tap	1501, 1501-LS, 1502, 1502-LS, 1503, 1503-LS, 1504, 1504-LS, 1515, 1515-S, 1515-Lite, 1515-LS, 1515-UL, 1515-ULS, 1517, 1517-LS, 1547
7060	15	5/16-18	1.250"	Single Hole End Tap	
7059	15	M8 x 1.25	1.250"	Single Hole End Tap	
7025	15	3/8-16	1.500"	Single Hole End Tap	
7053	15	M10 x 1.50	1.500"	Single Hole End Tap	
7054	15	7/16-14	1.500"	Single Hole End Tap	
7014	15	5/16-18	1.250"	Two Hole End Tap	1534-Lite, 1575
7015	15	M8 x 1.25	1.250"	Two Hole End Tap	
7016	15	5/16-18	1.250"	Two Hole End Tap	3034-Lite, 3075
7017	15	M8 x 1.25	1.250"	Two Hole End Tap	
7045	15	5/16-18	1.250"	Two Hole End Tap	1530, 1530-S, 1530-Lite, 1530-LS, 1530-UL, 1530-ULS
7048	15	M8 x 1.25	1.250"	Two Hole End Tap	
7024	15	3/8-16	1.500"	Two Hole End Tap	
7032	15	M10 x 1.50	1.500"	Two Hole End Tap	
7033	15	7/16-14	1.500"	Two Hole End Tap	
7049	15	3/8-16	1.500"	Three Hole End Tap	1545, 1545-S, 1545-LS
7026	15	5/16-18	1.250"	Three Hole End Tap	
7028	15	M8 x 1.25	1.250"	Three Hole End Tap	
7052	15	3/8-16	1.500"	Four Hole End Tap	3030, 3030-S, 3030-Lite, 3030-LS
7055	15	5/16-18	1.250"	Four Hole End Tap	
7056	15	M8 x 1.25	1.250"	Four Hole End Tap	
7057	15	3/8-16	1.500"	Eight Hole End Tap	3060
7029	15	5/16-18	1.250"	Eight Hole End Tap	
7031	15	M8 x 1.25	1.250"	Eight Hole End Tap	
20-7063	20	M5 x .80	22.23mm	Single Hole End Tap	20-2020
20-7061	20	10-32	22.23mm	Single Hole End Tap	

CONTINUE

Tap Profile End (Continued)

Part No.	Series	Tap Size	Minimum Depth	Service Type	Applicable Profiles
20-7047	20	M5 x .80	22.23mm	Two Hole End Tap	20-2040
20-7046	20	10-32	22.23mm	Two Hole End Tap	
20-7067	20	M5 x .80	22.23mm	Four Hole End Tap	20-4040
20-7064	20	10-32	22.23mm	Four Hole End Tap	
25-7061	25	1/4-20	28.58mm	Single Hole End Tap	25-2501, 25-2502, 25-2503, 25-2504, 25-2525, 25-2527
25-7063	25	M6 x 1.00	28.58mm	Single Hole End Tap	
25-7006	25	10-32	22.23mm	Two Hole End Tap	25-2514
25-7007	25	M5 x .80	22.23mm	Two Hole End Tap	
25-7008	25	10-32	22.23mm	Two Hole End Tap	25-5013
25-7009	25	M5 x .80	22.23mm	Two Hole End Tap	
25-7046	25	1/4-20	28.58mm	Two Hole End Tap	25-2550
25-7047	25	M6 x 1.00	28.58mm	Two Hole End Tap	
25-7036	25	1/4-20	28.58mm	Three Hole End Tap	25-2576
25-7037	25	M6 x 1.00	28.58mm	Three Hole End Tap	
25-7064	25	1/4-20	28.58mm	Four Hole End Tap	25-5050
25-7067	25	M6 x 1.00	28.58mm	Four Hole End Tap	
25-7038	25	1/4-20	28.58mm	Eight Hole End Tap	25-5010
25-7039	25	M6 x 1.00	28.58mm	Eight Hole End Tap	
30-7059	30	M8 x 1.25	31.75mm	Single Hole End Tap	30-3001, 30-3002, 30-3003, 30-3004, 30-3030, 30-3022
30-7060	30	5/16-18	31.75mm	Single Hole End Tap	
30-7048	30	M8 x 1.25	31.75mm	Two Hole End Tap	30-3060
30-7045	30	5/16-18	31.75mm	Two Hole End Tap	
30-7056	30	M8 x 1.25	31.75mm	Four Hole End Tap	30-6060
30-7055	30	5/16-18	31.75mm	Four Hole End Tap	
40-7060	40	5/16-18	31.75mm	Single Hole End Tap	40-4001, 40-4002, 40-4003, 40-4004, 40-4030-Lite, 40-4040, 40-4040-Lite, 40-4040-UL, 40-4045-Lite, 40-4093, 40-4094, 40-4096
40-7059	40	M8 x 1.25	31.75mm	Single Hole End Tap	
40-7025	40	3/8-16	38.10mm	Single Hole End Tap	
40-7053	40	M10 x 1.50	38.10mm	Single Hole End Tap	
40-7054	40	7/16-14	38.10mm	Single Hole End Tap	
40-7014	40	5/16-18	31.75mm	Two Hole End Tap	40-4020
40-7015	40	M8 x 1.25	31.75mm	Two Hole End Tap	
40-7016	40	5/16-18	31.75mm	Two Hole End Tap	40-8020
40-7017	40	M8 x 1.25	31.75mm	Two Hole End Tap	
40-7045	40	5/16-18	31.75mm	Two Hole End Tap	40-4080, 40-4080-Lite, 40-4080-UL, 40-4082-Lite, 40-4083-Lite, 40-4084-Lite, 40-4085-Lite
40-7048	40	M8 x 1.25	31.75mm	Two Hole End Tap	
40-7024	40	3/8-16	38.10mm	Two Hole End Tap	
40-7032	40	M10 x 1.50	38.10mm	Two Hole End Tap	
40-7033	40	7/16-14	38.10mm	Two Hole End Tap	
40-7026	40	5/16-18	31.75mm	Three Hole End Tap	40-4012
40-7028	40	M8 x 1.25	31.75mm	Three Hole End Tap	
40-7055	40	5/16-18	31.75mm	Four Hole End Tap	40-8080
40-7056	40	M8 x 1.25	31.75mm	Four Hole End Tap	
40-7029	40	5/16-18	31.75mm	Eight Hole End Tap	40-8016
40-7031	40	M8 x 1.25	31.75mm	Eight Hole End Tap	
45-7053	45	M12 x 1.75	38.10mm	Single Hole End Tap	45-4545, 45-4545-Lite
45-7054	45	1/2-13	38.10mm	Single Hole End Tap	
45-7032	45	M12 x 1.75	38.10mm	Two Hole End Tap	45-4590
45-7024	45	1/2-13	38.10mm	Two Hole End Tap	
45-7036	45	M12 x 1.75	38.10mm	Four Hole End Tap	45-9090
45-7035	45	1/2-13	38.10mm	Four Hole End Tap	

Part Description:

The access hole machining service provides clearance to the hex head of an end fastener screw, enabling the screw to be tightened. There are options available for an open (or custom) hole at any distance from the left end of the profile or drilled to predetermined locations for mounting specific profiles. **Additional Information:** When ordering open access holes, specify T-slot location from left end of profile and designate which T-slot to apply the service.

Open Style Access Hole

Part No.	Series	Service Type	Hole Diameter
7051	10	Access Hole for 10 Series Profiles	.219"
7050	15	Access Hole for 15 Series Profiles	.295"
20-7069	20	Access Hole for 20 Series Profiles	4.60mm
25-7051	25	Access Hole for 25 Series Profiles	5.50mm
30-7246	30	Access Hole for 30 Series Profiles	8.30mm
40-7050	40	Access Hole for 40 Series Profiles	7.50mm
45-7248	45	Access Hole for 45 Series Profiles	10.05mm
7246	RT	Access Hole for Ready Tube Series Profiles	.328"

Ordering Example: (2) 1530 x 35.75 w/ #7050 in slot T at .750" and in slot U at .750" from Left End

Access Hole Designations

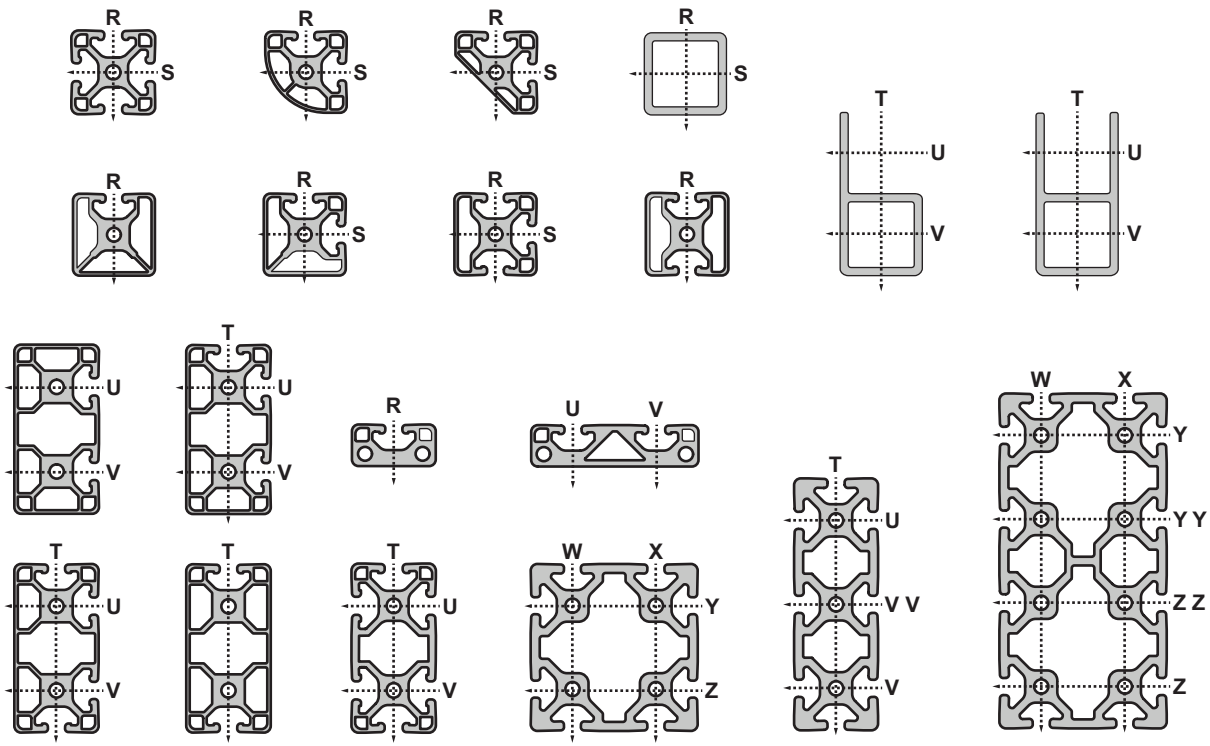

CONTINUE

Access Hole (Continued)

Predetermined Style Access Hole

Series	One Hole Style (per T-slot)	Two Hole Style (per T-slot)	Three Hole Style (per T-slot)	Four Hole Style (per T-slot)
10	**Style C** (.219" Diameter Drill Thru)	**Style D** (.219" Diameter Drill Thru)	**Style H** (.219" Diameter Drill Thru)	**Style J** (.219" Diameter Drill Thru)
15	**Style A** (.295" Diameter Drill Thru)	**Style B** (.295" Diameter Drill Thru)	**Style F** (.295" Diameter Drill Thru)	**Style G** (.295" Diameter Drill Thru)
20	**Style MN** (4.60mm Diameter Drill Thru)	**Style MO** (4.60mm Diameter Drill Thru)	—	—
25	**Style MC** (5.50mm Diameter Drill Thru)	**Style MD** (5.50mm Diameter Drill Thru)	**Style MH** (5.50mm Diameter Drill Thru)	**Style MJ** (5.50mm Diameter Drill Thru)
30	**Style MR** (8.30mm Diameter Drill Thru)	**Style MS** (8.30mm Diameter Drill Thru)	—	—
40	**Style MA** (7.50mm Diameter Drill Thru)	**Style MB** (7.50mm Diameter Drill Thru)	**Style MF** (7.50mm Diameter Drill Thru)	**Style MG** (7.50mm Diameter Drill Thru)
45	**Style MV** (10.00mm Diameter Drill Thru)	**Style MW** (10.00mm Diameter Drill Thru)	—	—
RT	**Style HA** (.328" Diameter Drill Thru)	**Style HB** (.328" Diameter Drill Thru)	—	—

Measuring Example

(Example uses 15 Series)

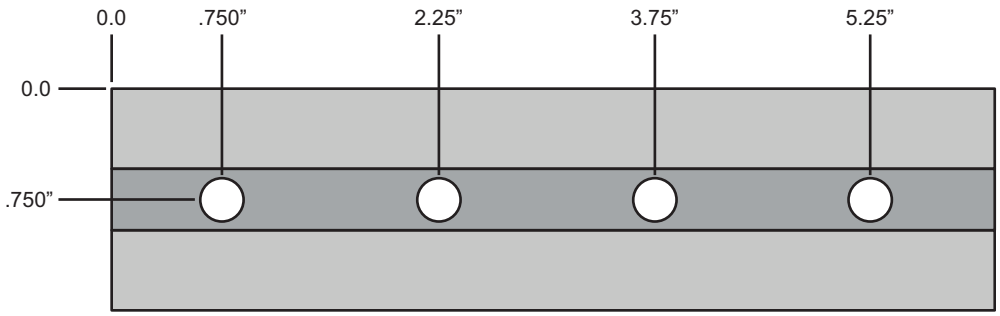

DO NOT CHAIN DIMENSION YOUR DRAWING!

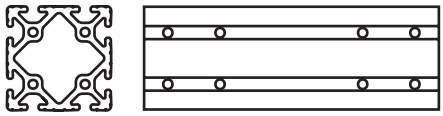

Ordering Example:

(1) 3030 x 12.00" w/ #7050 Style B in Y and Z left end, #7050 Style B in Y and Z right end.

Anchor Fastener Counterbore / Butt Fastener Counterbore

Part Description:

The anchor fastener and butt fastener counterbore services allow an anchor fastener or butt fastener face to be flush with the profile surface. It is required when using either of these fasteners for a profile connection. See pages 213-216 for information on anchor fasteners and page 217 for butt fasteners. **Additional Information:** When ordering this service, designate which profile end (left, right, or both) requires the counterbore.

Anchor Fastener Part No.	Butt Fastener Part No.	Series	Counterbore Size
7042	7043	10	.563" Diameter x .425" Deep
7040	7041	15	.813" Diameter x .660" Deep
7117*	7118*	15	20.00mm Diameter x 16.69mm Deep
20-7042	—	20	12.00mm Diameter x 9.09mm Deep
25-7042	25-7043	25	14.30mm Diameter x 10.72mm Deep
30-7044	—	30	15.88mm Diameter x 13.21mm Deep
40-7044	40-7049	40	20.00mm Diameter x 16.69mm Deep
40-7115**	40-7116**	40	.813" Diameter x .660" Deep

*40 Series Counterbore Machined for 15 Series

**15 Series Counterbore Machined for 40 Series

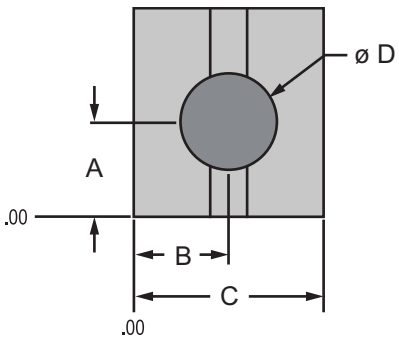

Anchor Fastener Counterbore Details				
Series	A	B	C	D
10	.406"	.500"	1.000"	.563" x .425" Deep
15	.855"	.750"	1.500"	.813" x .660" Deep
20	10.00mm	10.00mm	20.00mm	12.00mm x 9.09mm Deep
25	10.31mm	12.50mm	25.00mm	14.30mm x 10.72mm Deep
30	15.88mm	15.00mm	30.00mm	15.90mm x 13.21mm Deep
40	19.99mm	20.00mm	40.00mm	20.00mm x 16.69mm Deep

Butt Fastener Counterbore Details				
Series	A	B	C	D
10	.406"	.500"	1.000"	.563" x .425" Deep
15	.721"	.750"	1.500"	.813" x .660" Deep
25	10.31mm	12.50mm	25.00mm	14.30mm x 10.72mm Deep
40	19.99mm	20.00mm	40.00mm	20.00mm x 16.69mm Deep

Ordering Example: (3) 1530 x 35.75 w/ #7040 at F, G, in Left End and at H in Right End

Anchor Fastener Designations

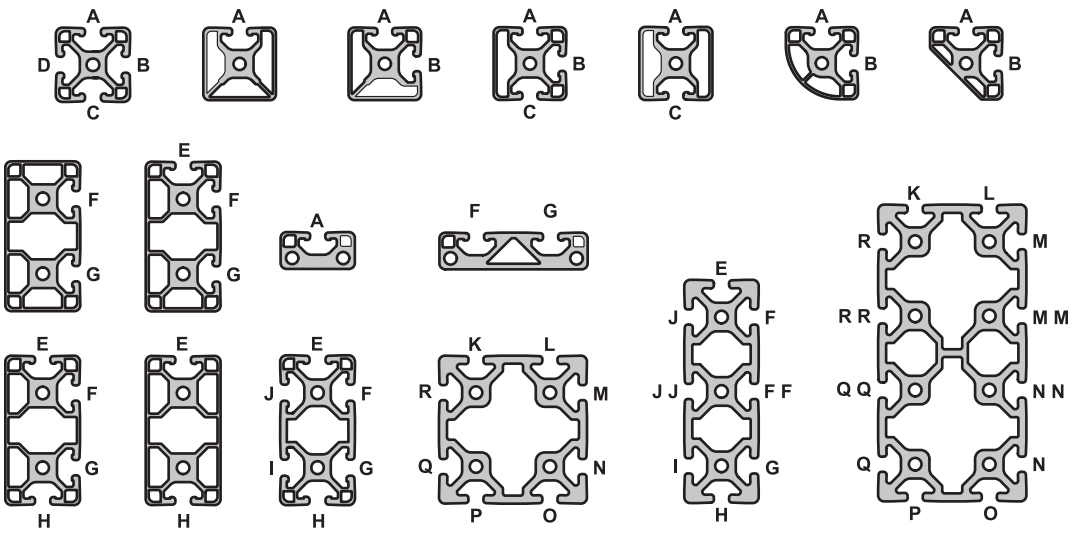

Drill Thru & Counterbore

Part Description:

The drill thru and counterbore machining service creates a hole for bolting through T-slot profiles. It includes both the drill thru and the counterbore. **Additional Information:** When ordering this service, designate T-slot position from left end of profile.

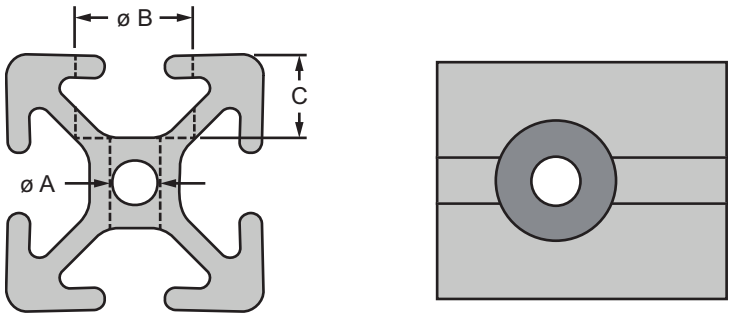

Part No.	Series	A	B	C
7256	10	.257"	.406"	.328"
7257	15	.328"	.531"	.495"
25-7256	25	6.53mm	10.31mm	8.33mm
30-7257	30	8.33mm	13.49mm	9.27mm
40-7257	40	8.33mm	13.49mm	12.70mm

Ordering Example: (2) 1530 x 24.00 w/ #7257 in F @ .750" and 23.50" from Left End

Drill Thru & Counterbore Designations

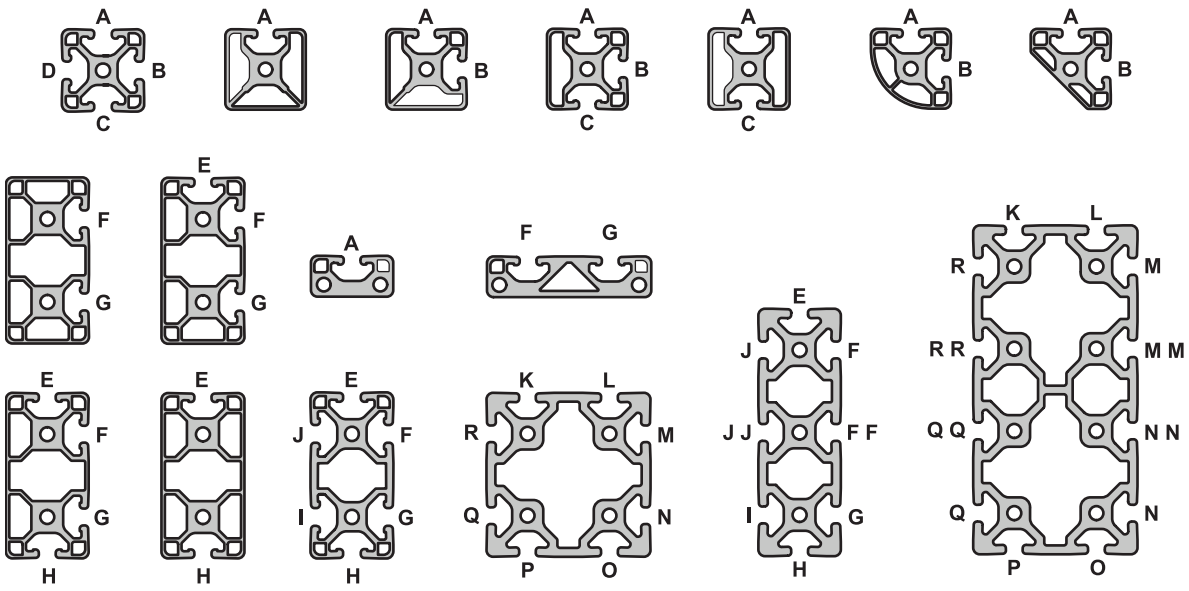

CONTINUE

Predetermined Style Drill Thru & Counterbore

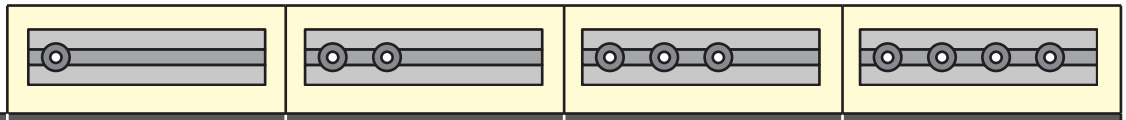

Series	One Hole Style (per T-slot)	Two Hole Style (per T-slot)	Three Hole Style (per T-slot)	Four Hole Style (per T-slot)
10	**Style C** (.257" Diameter Drill Thru)	**Style D** (.257" Diameter Drill Thru)	**Style H** (.257" Diameter Drill Thru)	**Style J** (.257" Diameter Drill Thru)
15	**Style A** (.328" Diameter Drill Thru)	**Style B** (.328" Diameter Drill Thru)	**Style F** (.328" Diameter Drill Thru)	**Style G** (.328" Diameter Drill Thru)
25	**Style MC** (6.53mm Diameter Drill Thru)	**Style MD** (6.53mm Diameter Drill Thru)	**Style MH** (6.53mm Diameter Drill Thru)	**Style MJ** (6.53mm Diameter Drill Thru)
30	**Style MR** (8.33mm Diameter Drill Thru)	**Style MS** (8.33mm Diameter Drill Thru)	—	—
40	**Style MA** (8.33mm Diameter Drill Thru)	**Style MB** (8.33mm Diameter Drill Thru)	**Style MF** (8.33mm Diameter Drill Thru)	**Style MG** (8.33mm Diameter Drill Thru)

Measuring Example

(Example uses 15 Series)

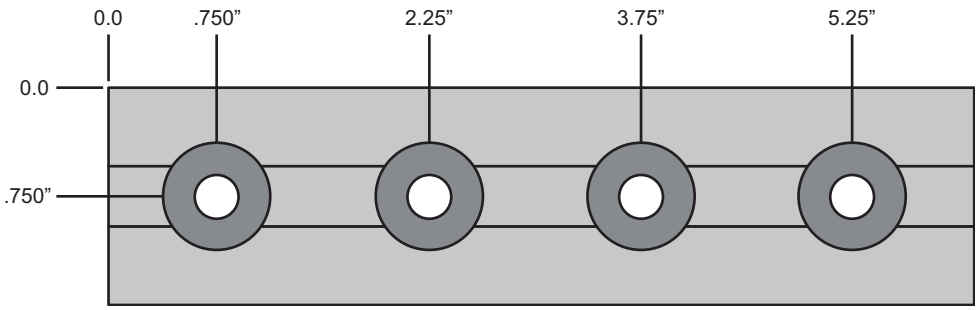

DO NOT CHAIN DIMENSION YOUR DRAWING!

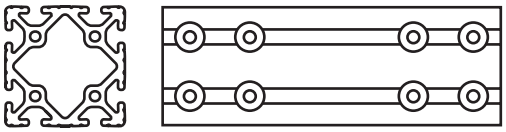

Ordering Example:

(1) 3030 x 40.00" w/ #7257 Style B in
M and N left end, #7257 Style B in M and N right end.

Profile Miter Cut

Part Description:

The profile miter cut is used to create custom-angled supports. T-slotted profiles can be miter cut to angles of 15 to 90 degrees or 30 to 90 degrees for select profiles (with the exception of 3060 and 40-8016, which can only be cut to an angle of 45 degrees across the 6.00" (160mm) side. Select structural shapes may also be mitered. See the miter cut worksheet on page 869 for guidelines. **Additional Information:** When ordering this service, designate which profile end (left, right, or both) requires the miter. A drawing is required with this machining service; for project design assistance contact a Design Technician at www.8020.net.

Minimum and Maximum
Angle Refers to Dimension A

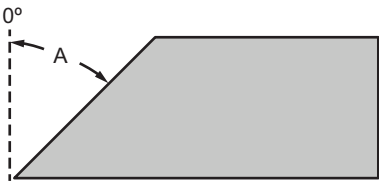

Part No.	Series	Applicable Profiles	Minimum Angle	Maximum Angle
7066	10	1001, 1001-S, 1002, 1002-S, 1003, 1003-S, 1004, 1004-S, 1010, 1010-S, 1012, 1012-S, 1050	0°	75°
7070	10	1020, 1020-S, 2012	0°	75°
7072	10	1030, 1030-S	0°	75°
7071	10	2020, 2020-S	0°	75°
7073	10	2040, 2040-S	0°	60°
7065	15	1501, 1501-LS, 1502, 1502-LS, 1503, 1503-LS, 1504, 1504-LS, 1515, 1515-S, 1515-Lite, 1515-LS, 1515-UL, 1515-ULS, 1517, 1517-LS, 1534-Lite, 1547, 1575	0°	75°
7075	15	1530, 1530-Lite, 1530-LS, 1530-S, 1530-UL, 1530-ULS, 3034-Lite, 3075	0°	60°
7076	15	1545, 1545-S, 1545-LS	0°	60°
7085	15	3030, 3030-Lite, 3030-LS, 3030-S	0°	60°
7087	15	3060	0°	45°
20-7065	20	20-2020	0°	75°
20-7075	20	20-2040	0°	60°
20-7085	20	20-4040	0°	60°
25-7066	25	25-2501, 25-2502, 25-2503, 25-2504, 25-2525, 25-2527, 25-2514	0°	75°
25-7070	25	25-2550, 25-5013	0°	60°
25-7071	25	25-5050	0°	60°
25-7072	25	25-2576	0°	60°
25-7073	25	25-5010	0°	45°
30-7065	30	30-3001, 30-3002, 30-3003, 30-3004, 30-3030, 30-3022	0°	75°
30-7075	30	30-3060	0°	60°
30-7085	30	30-6060	0°	60°
40-7065	40	40-4001, 40-4002, 40-4003, 40-4004, 40-4040, 40-4040-Lite, 40-4040-UL, 40-4030-Lite, 40-4045-Lite, 40-4020	0°	75°
40-7075	40	40-4080, 40-4080-Lite, 40-4080-UL, 40-4082-Lite, 40-4083-Lite, 40-4084-Lite, 40-4085-Lite, 40-8020	0°	60°
40-7076	40	40-4012	0°	60°
40-7085	40	40-8080	0°	60°
40-7087	40	40-8016	0°	45°
45-7065	45	45-4545, 45-4545-Lite	0°	75°
45-7075	45	45-4590	0°	60°

Continue to the next page for a Profile Miter Cut Worksheet

CONTINUE

Profile Miter Cut Worksheet

All T-slotted profiles may have miter cuts from 0° to 75°, EXCEPT for 3060 which can only be cut along the long side at 0° to 45° and 40-8016 which can only be cut along the long side at 0° to 45°. Example shown below:

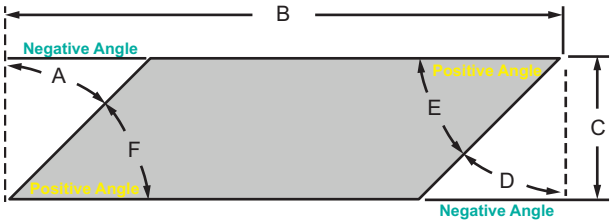

Example:
The following fields are required to complete a custom profile miter cut.

A = -30° **B** = 43.18" or 450mm **C** = 3.00" or 80mm
D = -45° **E** = 45° **F** = 60°

AutoQuoterX® II always indicates material removed from the profile. (See dimension reference A and D)

Note: Structural shape maximum angle is dependent on profile size

T-Slotted Profile Dimensions Sheet

Be sure to complete all required fields below for a profile miter cut.

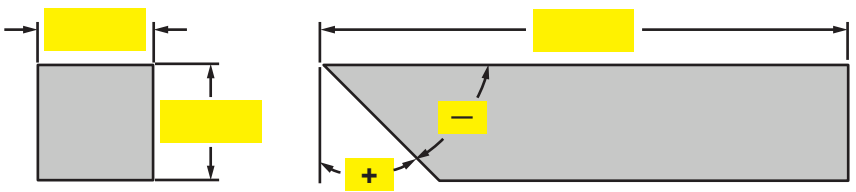

Counterbore Detail

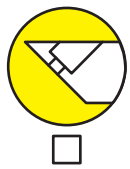

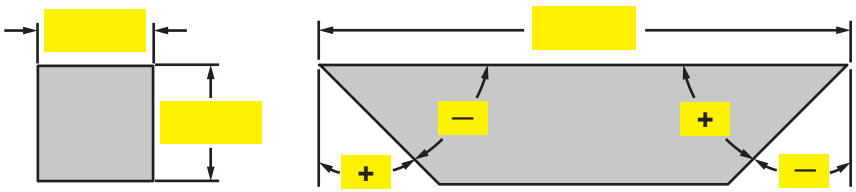

Counterbore Detail

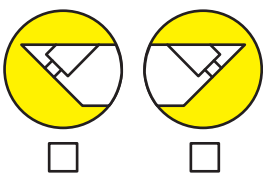

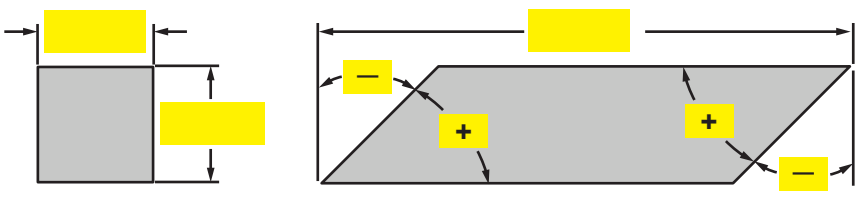

Counterbore Detail

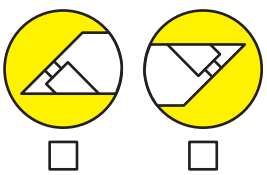

Miter Cut Counterbore

Part Description:

The miter cut counterbore machining service includes both a drill through and counterbore to create custom supports with angles ranging from 30 to 60 degrees. This service is for one end of the profile and includes mounting hardware. Each end receives a counterbore on the mitered face T-slot(s). **Additional Information:** When ordering this service, designate which profile end (left, right, or both) requires the counterbore.

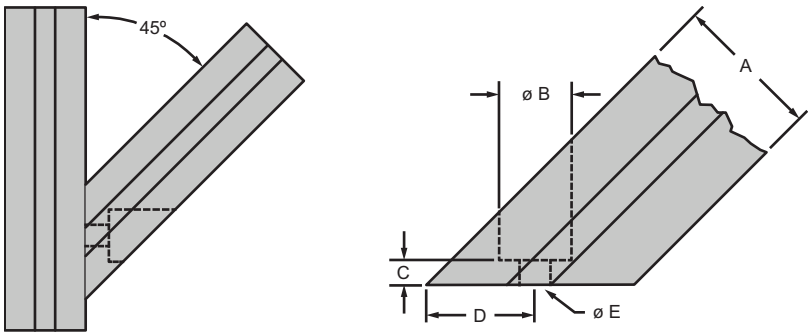

Part No.	Series	Applicable Profiles	A	B	C	D*	E
7083	10	1001, 1001-S, 1002, 1002-S, 1003, 1003-S, 1004, 1004-S, 1010, 1010-S	1.000"	.625"	.250"	.707"	.257"
7079	10	1020, 1020-S					
7074	10	1030, 1030-S					
7082	15	1501, 1501-LS, 1502, 1502-LS, 1503, 1503-LS, 1504, 1504-LS, 1515, 1515-S, 1515-Lite, 1515-LS, 1515-UL, 1515-ULS	1.500"	.750"	.250"	1.061"	.328"
7092	15	1530, 1530-Lite, 1530-LS, 1530-S, 1530-UL, 1530-ULS					
7094	15	1545, 1545-S, 1545-LS					
20-7082	20	20-2020	20.00mm	12.70mm	6.30mm	14.14mm	5.30mm
20-7092	20	20-2040					
25-7083	25	25-2501, 25-2502, 25-2503, 25-2504, 25-2525	25.00mm	15.88mm	6.35mm	17.68mm	6.53mm
25-7079	25	25-2550					
25-7074	25	25-2576					
30-7082	30	30-3001, 30-3002, 30-3003, 30-3004, 30-3030	30.00mm	19.05mm	6.35mm	21.21mm	8.30mm
30-7092	30	30-3060					
40-7082	40	40-4001, 40-4002, 40-4003, 40-4004, 40-4040, 40-4040-Lite, 40-4040-UL	40.00mm	19.05mm	6.35mm	28.28mm	8.30mm
40-7092	40	40-4080, 40-4080-Lite, 40-4080-UL, 40-4082-Lite, 40-4083-Lite, 40-4084-Lite, 40-4085-Lite					
40-7094	40	40-4012					
45-7082	45	45-4545, 45-4545-Lite	45.00mm	19.05mm	6.35mm	31.81mm	8.30mm
45-7092	45	45-4590					

*The "D" dimension is for profiles positioned at a 45 degree angle.

Ordering Example: (2) 1515 x 14.00" w/ #7065 @ 45º Left End Per Drawing and #7082 Left End

Included Mounting Hardware

Series	Bolt Part No.	Bolt Description	Qty.	T-Nut Part No.	T-Nut Description	Qty.	Washer Part No.	Qty.
10	3067	1/4-20 x 5/8" Black SHCS	1 to 6	3382	Economy	1 to 6	3258	1 to 6
15	3112	5/16-18 x 3/4" Black SHCS	1 to 6	3278	Economy	1 to 6	3260	1 to 6
20	11-5512	M5 x 12mm Black SHCS	1 to 4	14122	Slide-In	1 to 4	11-6040	1 to 4
25	13-6516	M6 x 16mm Blue SHCS	1 to 6	3859	Economy	1 to 6	13-6045	1 to 6
30	11-8516	M8 x 16mm Black SHCS	1 to 4	13025	Self-Aligning	1 to 4	11-6042	1 to 4
40	13-8518	M8 x 18mm Blue SHCS	1 to 6	3838	Economy	1 to 6	13-6042	1 to 6
45	11-8520	M8 x 20mm Black SHCS	1 to 4	13049	Self-Aligning	1 to 4	11-6042	1 to 4

Profile Miter Cut with Counterbore

Part Description:

The profile miter cut with counterbore is used to create 45 degree supports without the use of external flat plates. This service is comprised of the cut and counterbore on both ends and includes mounting hardware. The profile miter cut with counterbore can be used for custom lengths up to 72” (1828.8mm) long. Each end receives a counterbore on the mitered face T-slot(s).

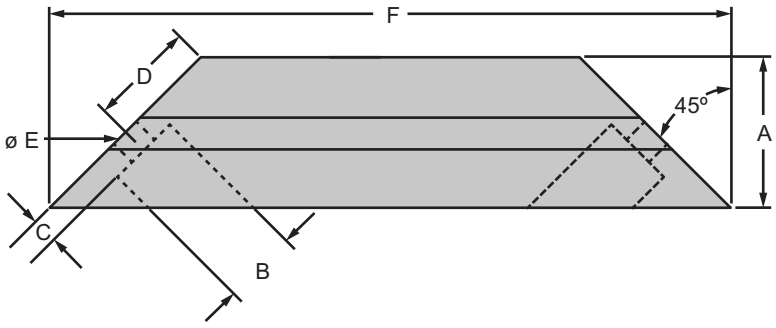

Part No.	Series	Applicable Profiles	A	B	C	D	E	F
7081	10	1001, 1001-S, 1002, 1002-S, 1003, 1003-S, 1004, 1004-S, 1010, 1010-S	1.000”	.625”	.250”	.707”	.257”	Custom
7084	10	1020, 1020-S	1.000”	.625”	.250”	.707”	.257”	
7086	10	1030, 1030-S	1.000”	.625”	.250”	.707”	.257”	
7080	15	1501, 1501-LS, 1502, 1502-LS, 1503, 1503-LS, 1504, 1504-LS, 1515, 1515-S, 1515-Lite, 1515-LS, 1515-UL, 1515-ULS	1.500”	.750”	.250”	1.061”	.328”	
7090	15	1530, 1530-Lite, 1530-LS, 1530-S, 1530-UL, 1530-ULS	1.500”	.750”	.250”	1.061”	.328”	
7093	15	1545, 1545-S, 1545-LS	1.500”	.750”	.250”	1.061”	.328”	
20-7080	20	20-2020	20.00mm	12.70mm	6.35mm	14.14mm	5.31mm	
20-7090	20	20-2040	20.00mm	12.70mm	6.35mm	14.14mm	5.31mm	
25-7081	25	25-2501, 25-2502, 25-2503, 25-2504, 25-2525	25.00mm	15.88mm	6.35mm	17.68mm	6.53mm	
25-7084	25	25-2550	25.00mm	15.88mm	6.35mm	17.68mm	6.53mm	
25-7086	25	25-2576	25.00mm	15.88mm	6.35mm	17.68mm	6.53mm	
30-7080	30	30-3001, 30-3002, 30-3003, 30-3004, 30-3030	30.00mm	19.05mm	6.35mm	21.21mm	8.33mm	
30-7090	30	30-3060	30.00mm	19.05mm	6.35mm	21.21mm	8.33mm	
40-7080	40	40-4001, 40-4002, 40-4003, 40-4004, 40-4040, 40-4040-Lite, 40-4040-UL	40.00mm	19.05mm	6.35mm	28.28mm	8.33mm	
40-7090	40	40-4080, 40-4080-Lite, 40-4080-UL, 40-4082-Lite, 40-4083-Lite, 40-4084-Lite, 40-4085-Lite	40.00mm	19.05mm	6.35mm	28.28mm	8.33mm	
40-7093	40	40-4012	40.00mm	19.05mm	6.35mm	28.28mm	8.33mm	
45-7080	45	45-4545, 45-4545-Lite	45.00mm	19.05mm	6.35mm	31.81mm	8.33mm	
45-7090	45	45-4590	45.00mm	19.05mm	6.35mm	31.81mm	8.33mm	

Ordering Example: (2) 1530 x 23.625 w/ #7090 Miter Cut and Counterbore, F = 23.625

Included Mounting Hardware

Series	Bolt Part No.	Bolt Description	Qty.	T-Nut Part No.	T-Nut Description	Qty.	Washer Part No.	Qty.
10	3067	1/4-20 x 5/8” Black SHCS	2 to 6	3382	Economy	2 to 6	3258	2 to 6
15	3112	5/16-18 x 3/4” Black SHCS	2 to 6	3278	Economy	2 to 6	3260	2 to 6
20	11-5512	M5 x 12mm Black SHCS	2 to 4	14122	Slide-In	2 to 4	11-6040	2 to 4
25	13-6516	M6 x 16mm Blue SHCS	2 to 6	3859	Economy	2 to 6	13-6045	2 to 6
30	11-8516	M8 x 16mm Black SHCS	2 to 4	13025	Self-Aligning	2 to 4	11-6042	2 to 4
40	13-8518	M8 x 18mm Blue SHCS	2 to 6	3838	Economy	2 to 6	13-6042	2 to 6
45	11-8520	M8 x 20mm Black SHCS	2 to 4	13049	Self-Aligning	2 to 4	11-6042	2 to 4

Clearance Drill Thru in T-Slot

Part Description:

The clearance drill thru in T-slot is typically used for additional clearance while adding stem casters or leveling feet to a profile. It is a drill through the profile T-slot, as designated in the charts below. **Additional Information:** When ordering this service, designate T-slot position from left end of profile.

Part No.	Series	Service Type	Hole Diameter
7244	10 15	Drill Thru Hole in T-Slot	.257"
7246	10 15		.328"
7248	10 15		.438"
7240	15		.563"
65-7244	25 30 40 45		6.53mm
65-7246	25 30 40 45		8.33mm
65-7248	25 30 40 45		11.13mm
65-7240	30 40 45		14.30mm

Ordering Example: (2) 1530 x 24.00" w/ #7248 in T @ 1.50" and 22.50" from Left End

Clearance Drill Thru in T-Slot Designations

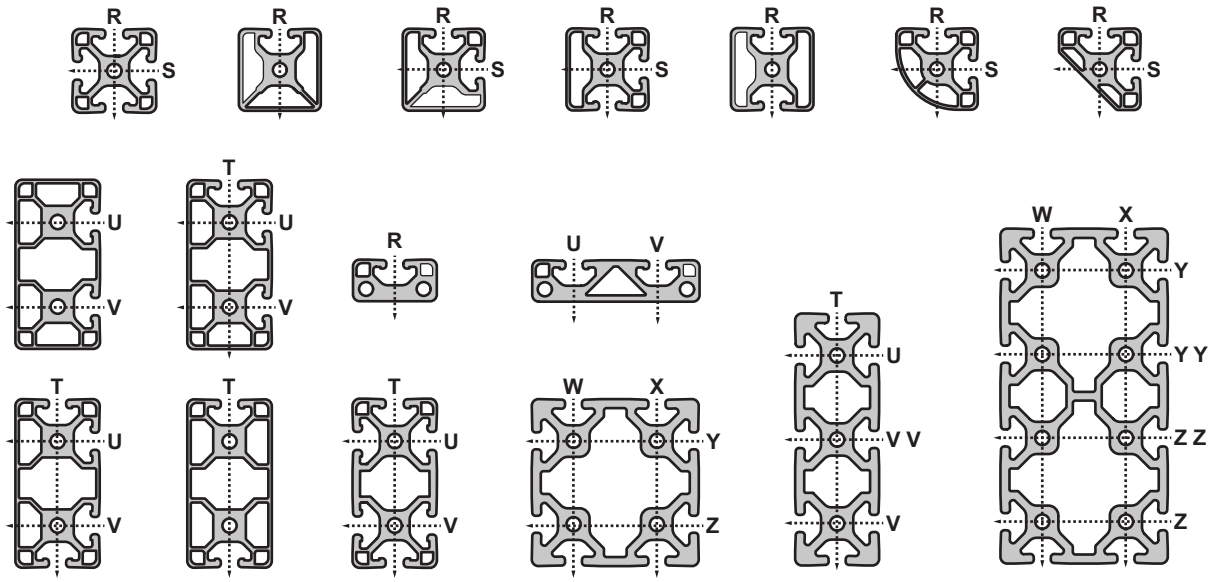

Clearance Drill Thru Between T-Slots

Part Description:

The clearance drill thru between T-slots is typically used for additional clearance while adding stem casters or leveling feet to a profile. It is a drill through the profile wall, as designated in the charts below. **Additional Information:** When ordering this service, designate T-slot position from left end of profile.

Part No.	Series	Service Type	Hole Diameter
7241	10 15	Drill Thru Hole in T-Slot	.257"
7243	10 15		.328"
7245	10 15		.438"
7247	15		.563"
65-7241	25 30 40 45		6.53mm
65-7243	25 30 40 45		8.33mm
65-7245	25 30 40 45		11.13mm
65-7247	30 40 45		14.30mm

Ordering Example: (2) 1530 x 24.00" w/ #7247 between U and V @ 1.50" from Left End

Clearance Drill Thru Between T-Slot Designations

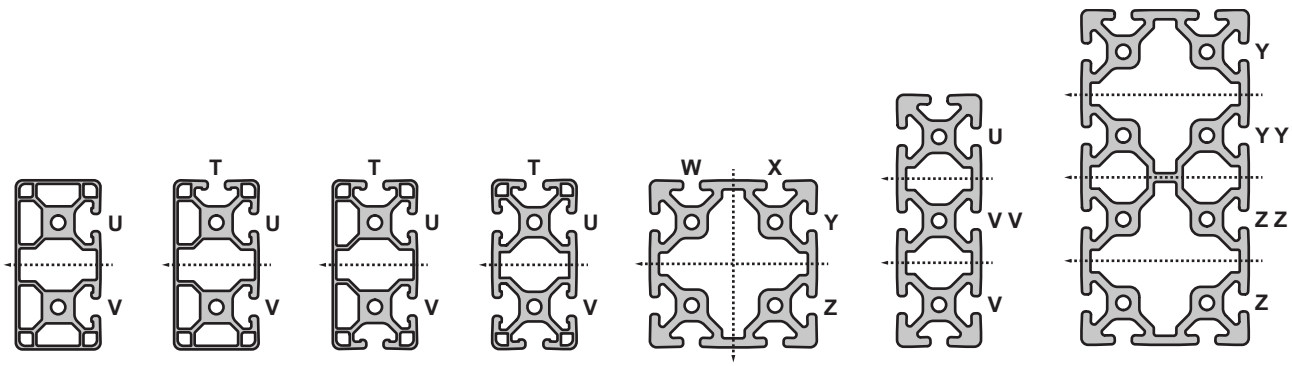

Deluxe Door Handle Profile Milling

Part Description:

The deluxe door handle profile milling service is used to add a deluxe door handle to a T-slot profile. See page 567 for information on deluxe door handles. **Additional Information:** When ordering this service, designate distance from the end of the profile to the centerline (CL).

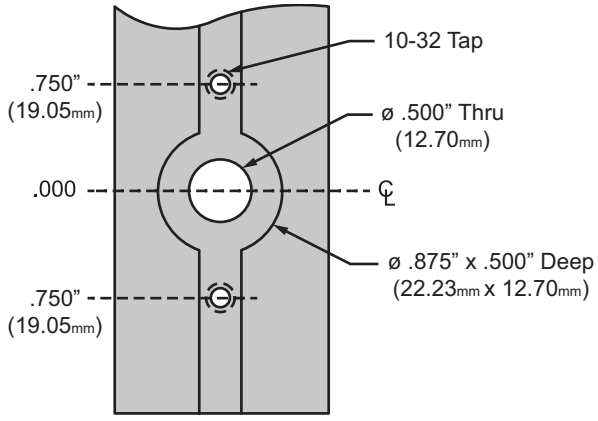

Positioning Example

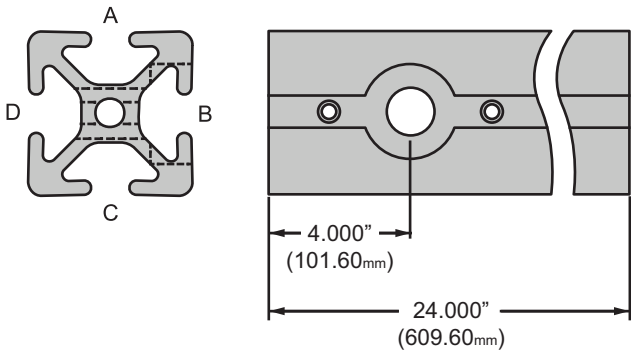

Part No.	Series	Service Type	Bore Size (Depth)
7305	15	Drill Thru Hole for Deluxe Door Handle	ø .875" x (.500")
65-7305	40		ø 22.23mm x (12.70mm)

Ordering Example: (1) 1515 x 24.00" w/ #7305 in B @ 4.00" from left end.

Deluxe Door Handle Machining Designations

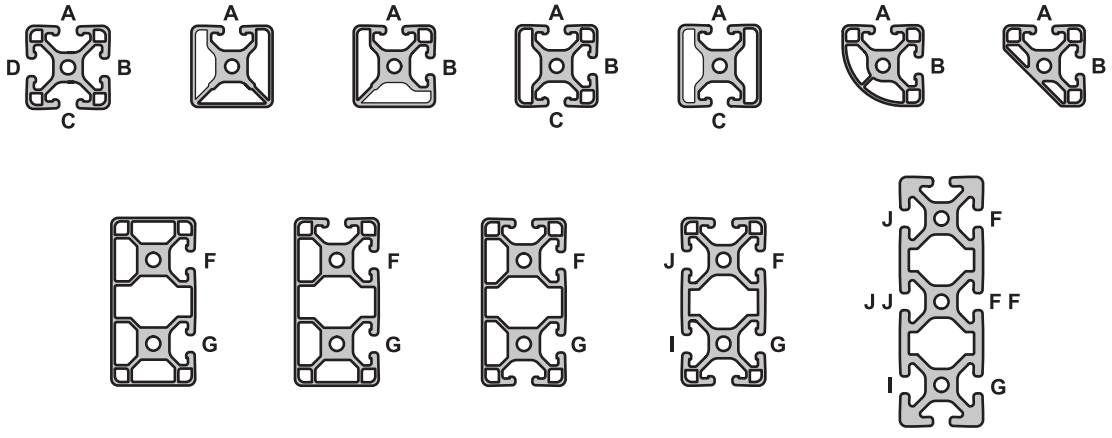

Part Description:

The furniture style handle profile milling service is used to add a furniture style door handle to a T-slot profile. See pages 569-570 for information on furniture style handles. **Additional Information:** When ordering this service, designate distance from the end of the profile to the centerline (CL).

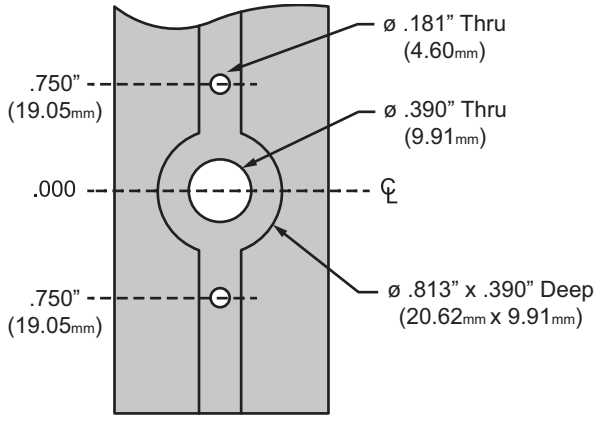

Positioning Example

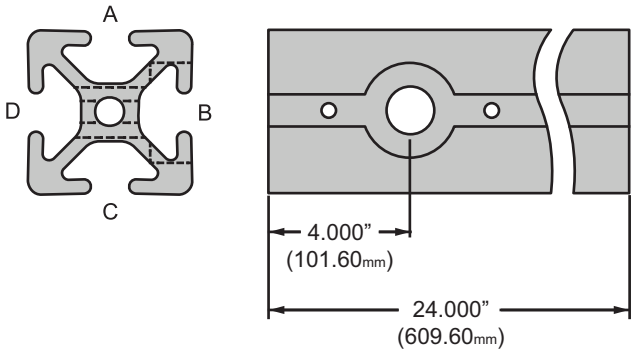

Part No.	Series	Service Type	Bore Size (Depth)
7315	10 15	Drill Thru Hole for Furniture Style Handle	ø .812" x (.390")
65-7315	25 40		ø 20.62mm x (9.91mm)

Ordering Example: (1) 1515 x 24.00" w/ #7315 in B @ 4.00" from left end.

Furniture Style Handle Machining Designations

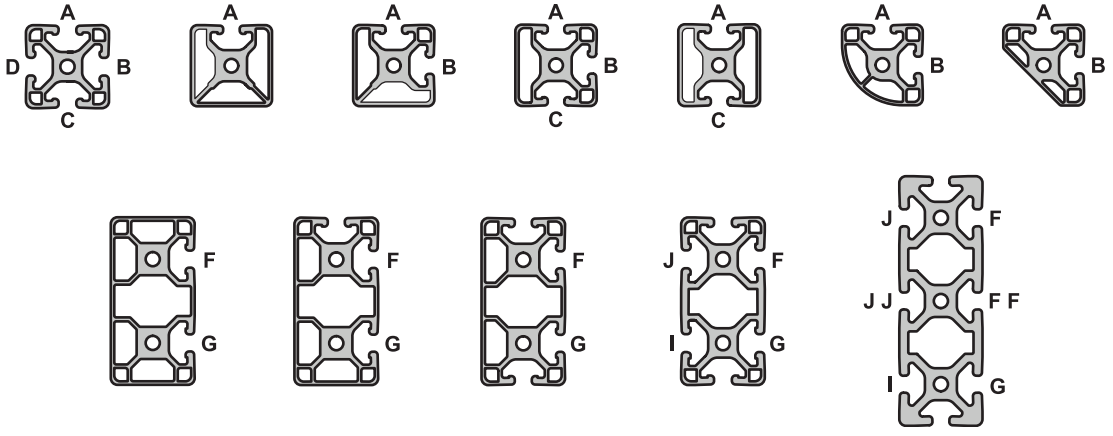

Miter Connector Profile Milling

Part Description:

The miter connector profile milling service allows a miter connector face to be flush with the profile surface and is required when using this connector for a profile connection. See page 222 for information on the miter connector.

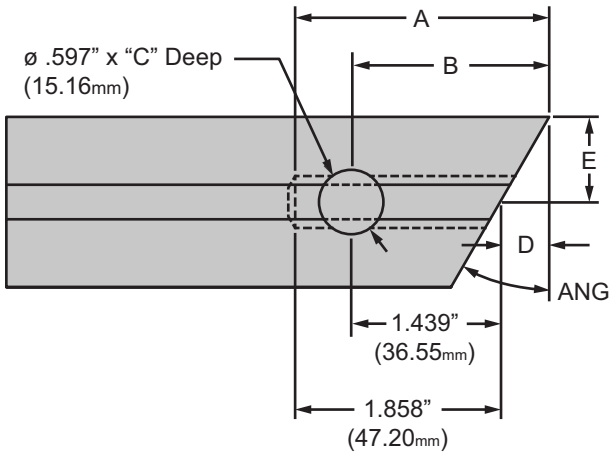

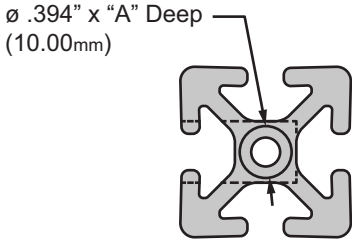

Miter Connector Profile Milling																	
Bar Cut Angle (0-45):	ANG	7.5°			15°			22.5°			30°			45°			
Compatible Series:	---	15	40	45	15	40	45	15	40	45	15	40	45	15	40	45	
ø.394 (10mm) Drill Depth:	A	1.957"	49.83mm	50.16mm	2.059"	52.55mm	53.22mm	2.169"	55.48mm	56.51mm	2.291"	58.74mm	60.18mm	2.608"	67.19mm	69.69mm	
ø.597 (15.16mm) C-bore from Miter Tip:	B	1.538"	39.18mm	39.51mm	1.640"	41.91mm	42.58mm	1.750"	44.84mm	45.87mm	1.872"	48.10mm	49.54mm	2.189"	56.55mm	59.05mm	
Counterbore Depth:	C	1.036"	27.25mm	29.77mm	1.036"	27.25mm	29.77mm	1.036"	27.25mm	29.77mm	1.036"	27.25mm	29.77mm	1.036"	27.25mm	29.77mm	
Miter Offset:	D	.099"	2.63mm	2.96mm	.201"	5.36mm	6.03mm	.311"	8.28mm	9.32mm	.433"	11.55mm	12.99mm	.750"	20.00mm	22.50mm	
Center of Bar:	E	.750"	20.00mm	22.50mm	.750"	20.00mm	22.50mm	.750"	20.00mm	22.50mm	.750"	20.00mm	22.50mm	.750"	20.00mm	22.50mm	

Part No.	Series	Service Type
7110	15	Counterbore for Miter Connector
40-7110	40	
45-7110	45	

Miter Connector Machining Designations

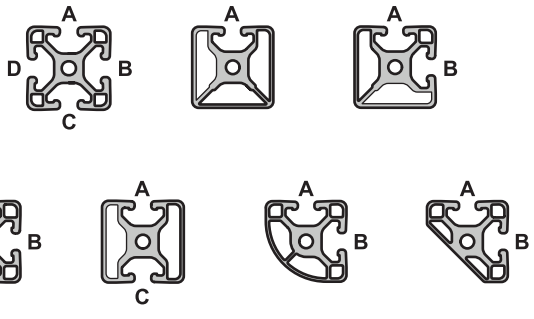

Part Description:

The economy T-nut clearance profile milling service allows placement of an economy T-nut into a T-slot profile when the ends are captivated. See the hardware section beginning on page 364 for information on economy T-nuts. **Additional Information:** When ordering this service, specify the distance from the end of the profile to the centerline (CL) and designate T-slot location that requires the service.

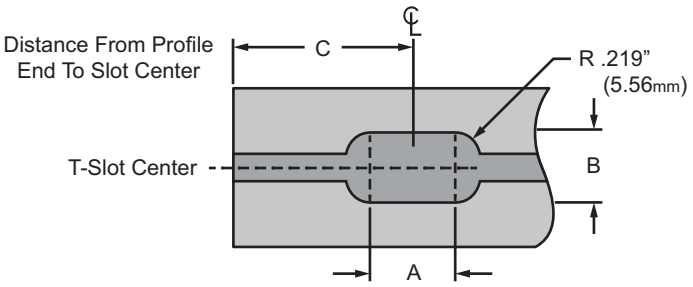

Part No.	Series	Compatiable T-Nut Type	Slot Length "A"	Slot Width "B"	Minimum Distance "C"	Tolerance
7098	10	Single	.625"	.506"	.532"	Slot Length +/- .030" Slot Width +/- .010"
7101	10	Double	1.625"	.506"	1.032"	
7103	10	Triple	2.203"	.506"	1.321"	
7099	15	Single	.763"	.700"	.601"	
7102	15	Double	2.638"	.700"	1.538"	
7104	15	Triple	3.198"	.700"	1.818"	
25-7098	25	Single	15.88mm	12.85mm	13.51mm	Slot Length +/- .76mm Slot Width +/- .25mm
25-7101	25	Double	41.28mm	12.85mm	26.21mm	
40-7099	40	Single	19.38mm	17.78mm	15.27mm	
40-7102	40	Double	67.00mm	17.78mm	39.07mm	

Ordering Example: (2) 1010 x 18.000 w/ #7098 in A @ 3.00 and 15.00 from Left End

Economy T-Nut Clearance Designations

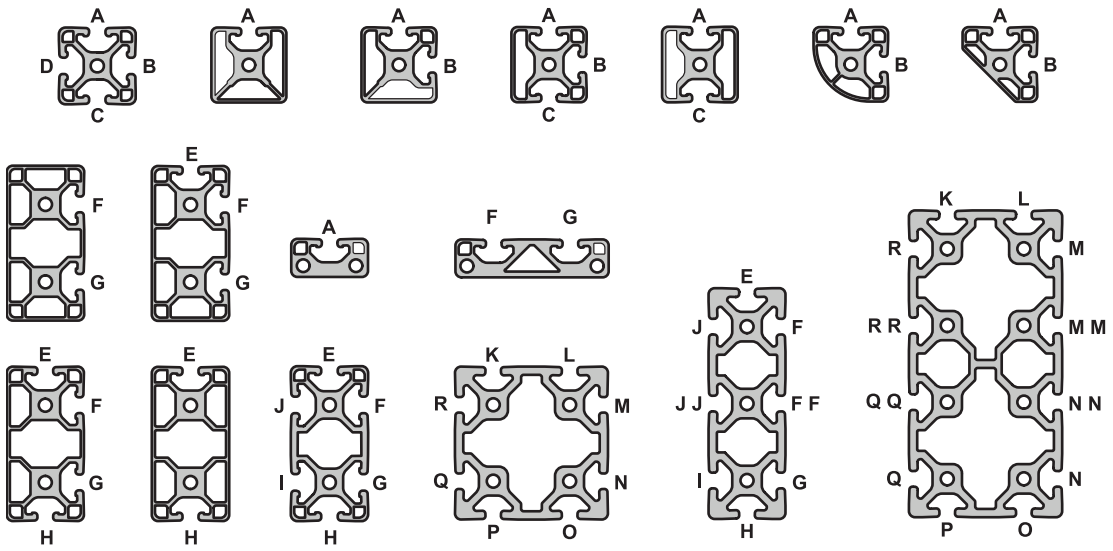

Central Connector Profile Milling

Part Description:

The central connector profile milling service consists of both a drill through the profile end and a T-slot counterbore. This machining service enables the use of a central connector (page 224 for information on central connectors). **Additional Information:** When ordering this milling service, designate profile end (left, right or both) and T-slot for the counterbore.

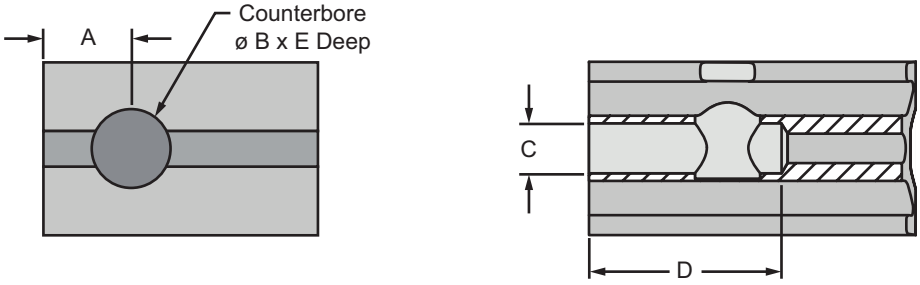

Part No.	Series	Service Type	A	B	C	D	E
7058	15	15 Series Profile Milling for Central Connector	1.260"	.597"	.469"	1.750"	1.025"
30-7058	30	30 Series Profile Milling for Central Connector	17.50mm	11.11mm	8.03mm	30.50mm	21.34mm
40-7058	40	40 Series Profile Milling for Central Connector	32.00mm	15.16mm	11.91mm	44.45mm	26.97mm
45-7058	45	45 Series Profile Milling for Central Connector	22.50mm	17.12mm	—	—	32.64mm

Central Connector Machining Designations

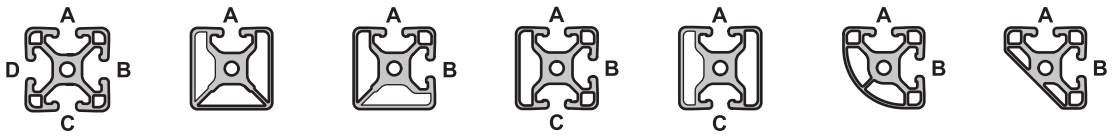

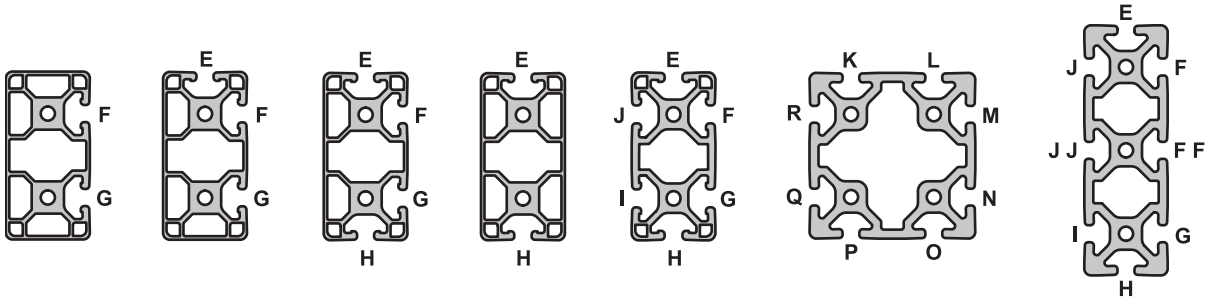

Part Description:

The manifold access profile milling service consists of a drill through one wall of a T-slot profile to provide access to the center cavity for use with pressure manifolds. See the manifolds section beginning on page 752 for information on pressure manifolds. **Additional Information:** When ordering, designate distance from the left end of the profile. Reference the hole location by specifying "between" T-slot designations. See below for T-slot designations.

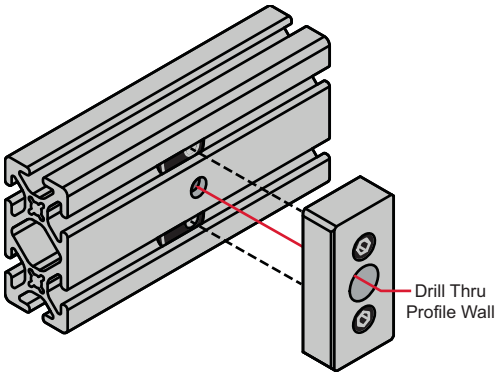

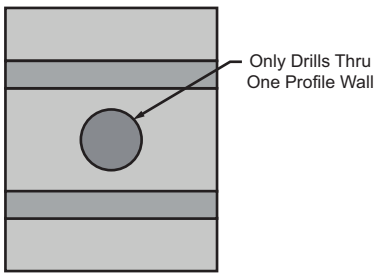

Part No.	Series	Service Type	Hole Diameter
7062	10	Drill Thru One Profile Wall	.327"
7068	15		.374"
25-7062	25		8.30mm
40-7068	40		9.50mm

Ordering Example: 1530: (1) @48.25" w/ #7068 btwn F and G @ 12.00" and 36.25" from left end.

Manifold Access Drill Thru Designations

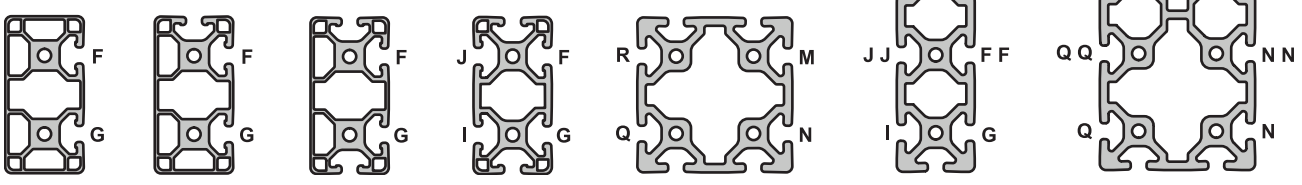

Bolt Connector Profile Milling

Part Description:

The bolt connector profile milling service provides clearance for use of a bolt connector with T-slot profiles. See page 225 for information on bolt connectors. **Additional Information:** When ordering this milling service, designate profile end (left, right, or both) and T-slot for the clearance hole.

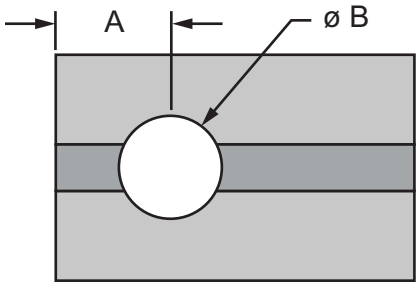

Part No.	Series	Service Type	Bolt Connector	A	B
30-7034	30	30 Series Profile Milling for Bolt Connector (30.00mm only)	13189	16.50mm	8.30mm
45-7034	45	45 Series Profile Milling for Bolt Connector (45.00mm)	13190	23.70mm	17.15mm
45-7037	45	45 Series Profile Milling for Bolt Connector (90.00mm)	13192	23.70mm	17.15mm

Ordering Example: (2) 45-4590 x 908.0mm w/45-7037 in slot R both ends.

Bolt Connector Machining Designations

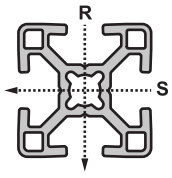

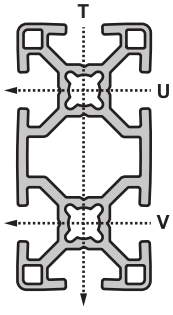

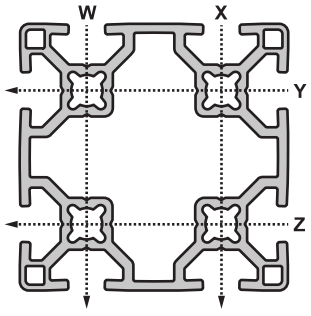

Part No.	Series	Hole Diameter	Part No.	Series	Hole Diameter
7401	10	.265"	7400	15	.344"

Ordering Example: (1) 6724 w/ #7401 @ LN, LR, LQ and LU

Fractional Part No.	Series	Hole Locations	X	X*	Y	Z
6715 / 6716*	10	LA	.937"	1.000"	—	1.562"
		LB	.937"	1.000"	.812"	—
		LC	.937"	1.000"	—	1.562"
6716*	10	LD	—	3.000"	—	1.562"
		LE	—	3.000"	.812"	—
		LF	—	3.000"	—	1.562"
6725 / 6726*	10	LG	.937"	1.000"	—	.812"
		LH	.937"	1.000"	1.469"	—
		LI	.937"	1.000"	—	.812"
6726*	10	LJ	—	3.000"	—	.812"
		LK	—	3.000"	1.469"	—
		LM	—	3.000"	—	.812"
6723 / 6724*	10	LN	.937"	1.000"	—	.812"
		LO	.937"	1.000"	2.469"	—
		LP	.937"	1.000"	1.469"	—
		LQ	.937"	1.000"	—	.812"
6724*	10	LR	—	3.000"	—	.812"
		LS	—	3.000"	2.469"	—
		LT	—	3.000"	1.469"	—
		LU	—	3.000"	—	.812"
6815 / 6830 6816* / 6831*	15	LA	1.406"	1.500"	—	2.125"
		LB	1.406"	1.500"	1.250"	—
		LC	1.406"	1.500"	—	2.125"
6816* / 6831*	15	LD	—	4.500"	—	2.125"
		LE	—	4.500"	1.250"	—
		LF	—	4.500"	—	2.125"
6825 / 6835 6826* / 6836*	15	LG	1.406"	1.500"	—	1.250"
		LH	1.406"	1.500"	2.000"	—
		LI	1.406"	1.500"	—	1.250"
6826* / 6836*	15	LJ	—	4.500"	—	1.250"
		LK	—	4.500"	2.000"	—
		LM	—	4.500"	—	1.250"
6823 / 6833 6824* / 6834*	15	LN	1.406"	1.500"	—	1.250"
		LO	1.406"	1.500"	3.500"	—
		LP	1.406"	1.500"	2.000"	—
		LQ	1.406"	1.500"	—	1.250"
6824* / 6834*	15	LR	—	4.500"	—	1.250"
		LS	—	4.500"	3.500"	—
		LT	—	4.500"	2.000"	—
		LU	—	4.500"	—	1.250"

Continue to 882 for metric brake holes for linear bearings

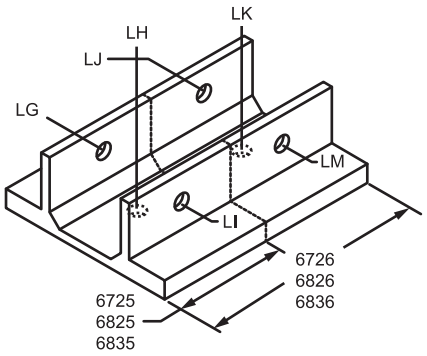

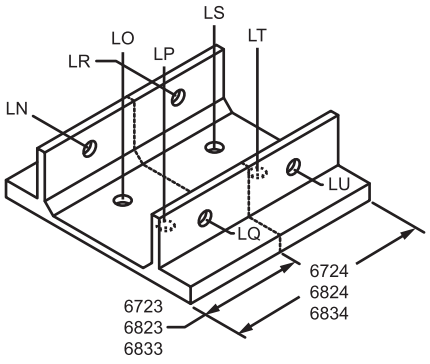

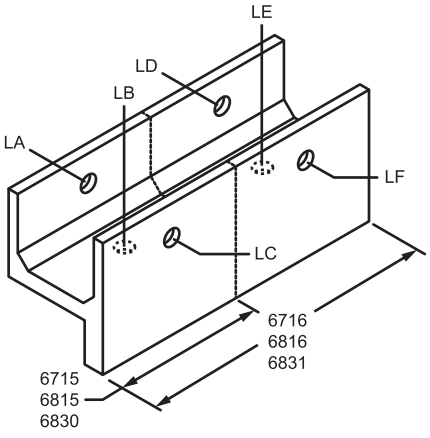

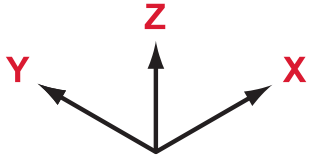

CONTINUE

Brake Holes for Linear Bearings (Continued)

Part No.	Series	Hole Diameter	Part No.	Series	Hole Diameter
25-7401	25	6.73mm	40-7400	40	8.73mm

Ordering Example: (1) 25-6724 w/ #25-7401 @ LN, LR, LQ and LU

Metric Part No.	Series	Hole Locations	X	X*	Y	Z
25-6715 / 25-6716*	25	LA	23.50mm	25.00mm	—	39.07mm
		LB	23.50mm	25.00mm	20.56mm	—
		LC	23.50mm	25.00mm	—	39.07mm
25-6716*	25	LD	—	75.00mm	—	39.07mm
		LE	—	75.00mm	20.56mm	—
		LF	—	75.00mm	—	39.07mm
25-6725 / 25-6726*	25	LG	23.50mm	25.00mm	—	20.52mm
		LH	23.50mm	25.00mm	37.05mm	—
		LI	23.50mm	25.00mm	—	20.52mm
25-6726*	25	LJ	—	75.00mm	—	20.52mm
		LK	—	75.00mm	37.05mm	—
		LM	—	75.00mm	—	20.52mm
25-6723 / 25-6724*	25	LN	23.50mm	25.00mm	—	20.52mm
		LO	23.50mm	25.00mm	62.13mm	—
		LP	23.50mm	25.00mm	37.13mm	—
		LQ	23.50mm	25.00mm	—	20.52mm
25-6724*	25	LR	—	75.00mm	—	20.52mm
		LS	—	75.00mm	62.13mm	—
		LT	—	75.00mm	37.13mm	—
		LU	—	75.00mm	—	20.52mm
40-6815 / 40-6830 40-6816* / 40-6831*	40	LA	37.50mm	40.00mm	—	54.38mm
		LB	37.50mm	40.00mm	32.57mm	—
		LC	37.50mm	40.00mm	—	54.38mm
40-6816* / 40-6831*	40	LD	—	120.00mm	—	54.38mm
		LE	—	120.00mm	32.57mm	—
		LF	—	120.00mm	—	54.38mm
40-6825 / 40-6835 40-6826* / 40-6836*	40	LG	37.50mm	40.00mm	—	32.57mm
		LH	37.50mm	40.00mm	51.56mm	—
		LI	37.50mm	40.00mm	—	32.57mm
40-6826* / 40-6836*	40	LJ	—	120.00mm	—	32.57mm
		LK	—	120.00mm	51.56mm	—
		LM	—	120.00mm	—	32.57mm
40-6823 / 40-6833 40-6824* / 40-6834*	40	LN	37.50mm	40.00mm	—	32.57mm
		LO	37.50mm	40.00mm	91.65mm	—
		LP	37.50mm	40.00mm	51.56mm	—
		LQ	37.50mm	40.00mm	—	32.57mm
40-6824* / 40-6834*	40	LR	—	120.00mm	—	32.57mm
		LS	—	120.00mm	91.65mm	—
		LT	—	120.00mm	51.56mm	—
		LU	—	120.00mm	—	32.57mm

Refer to page 881 for fractional brake holes for linear bearings

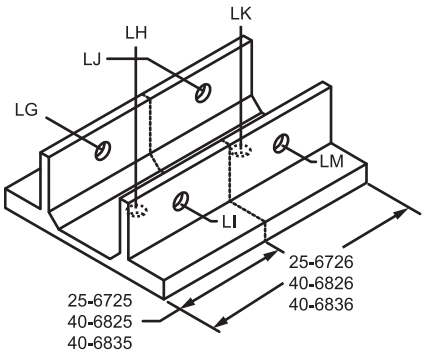

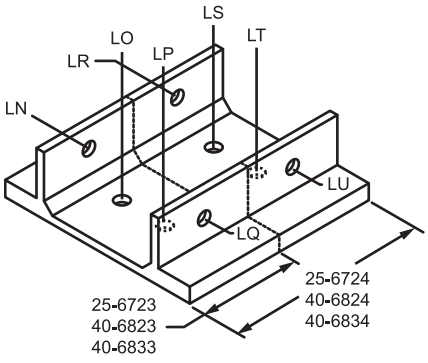

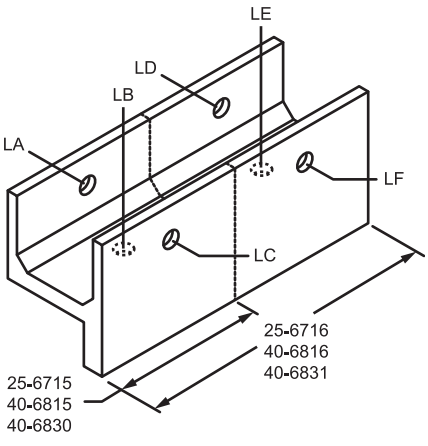

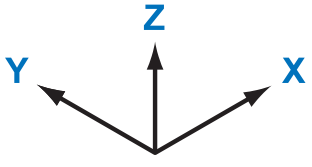

45 Degree Flange Milling

The 45 degree flange milling service allows two Quick Frame profile flanges to intersect at 90 degrees without interference. **Additional Information:** This service is for two ends. If one end is desired specify left or right end.

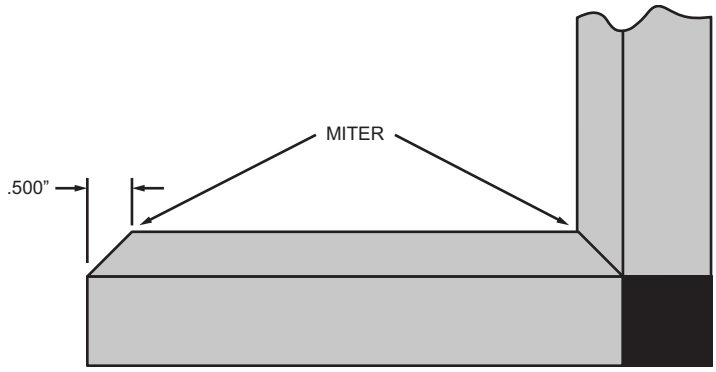

Part No.	Series	Service Type
7300	QF	45 Degree Flange Milling Service for Quick Frame Location A, B or C only
7301	QF	45 Degree Flange Milling Service for Quick Frame Location A and B
7302	QF	45 Degree Flange Milling Service for Quick Frame Location A and C

Ordering Example: (2) #9010 x 22.00” w/ #7300 on A per drawing.

45 Degree Flange Machining Designations

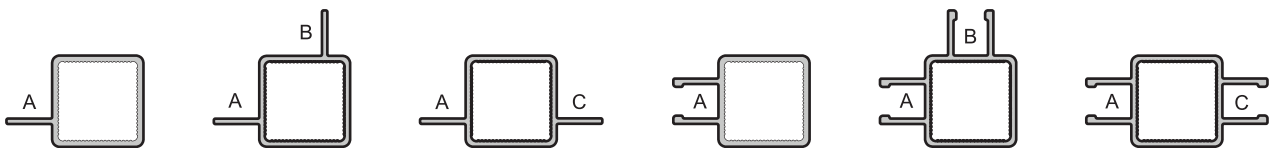

Connector Rod End Tap

The connector rod end tap machining service is used to add threads to the end of a connector rod. This enables the insertion of a bolt to mount accessories. **Additional Information:** When ordering this end tap, designate which end (left, right or both) requires the tap. See page 764 for more information on connector rods.

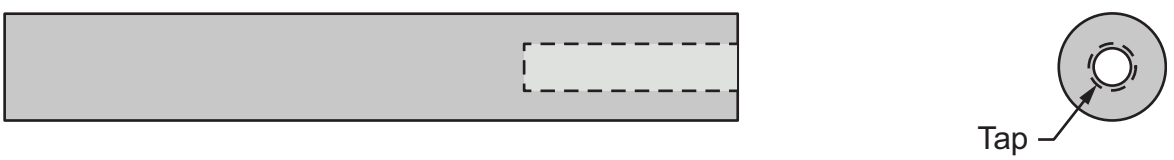

Part No.	Series	Tap Size (Min. Depth)	Taps Per End	Profile Part No.
7105	F RT	5/16-18 (1.25”)	1	9820
7106	F RT	M8 x 1.25” (31.75mm)		

Cut Plastic Panel to Size / Aluminum Plate to Size / Shear Wire Mesh to Size

Part Description:

The cut panel to size machining service is used to create custom plastic, mesh, or aluminum plates and panels. It has a tolerance of plus or minus .060" (1.52mm) and there are options available to accommodate different thicknesses and required lengths.

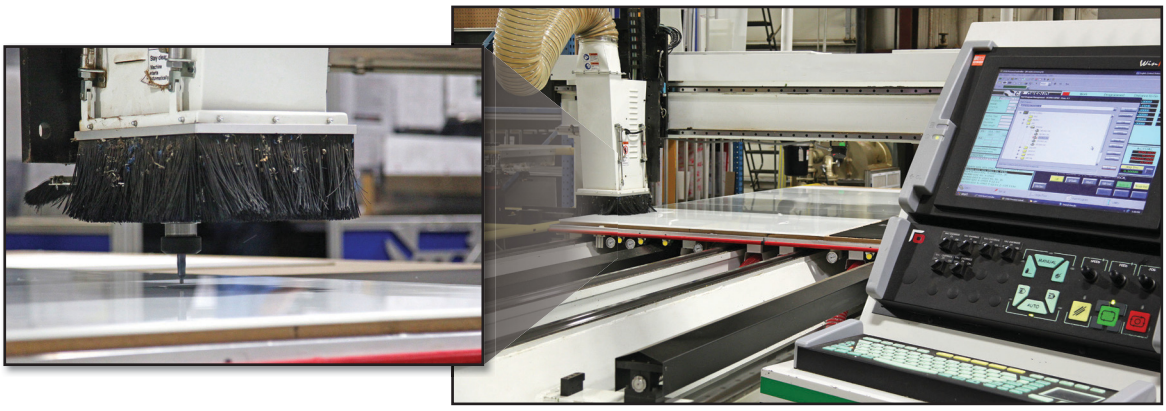

Cut Plastic Panel or Aluminum Plate to Size

Panel Part No.	Aluminum Part No.	Series	Service Type	Cut Tolerance
7150	7167	F	Cut Plastic Panel or Aluminum Plate **ALL** Sides ≤ 48" for Panels **Up To** .250" Thick	+/- .060"
7155	7168	F	Cut Plastic Panel or Aluminum Plate **ANY** Side > 48" for Panels **Up To** .250" Thick	
7151	7169	F	Cut Plastic Panel or Aluminum Plate **ALL** Sides ≤ 48" for Panels **Thicker Than** .250"	
7153	7170	F	Cut Plastic Panel or Aluminum Plate **ANY** Side > 48" for Panels **Thicker Than** .250"	
65-7150	65-7167	M	Cut Plastic Panel or Aluminum Plate **ALL** Sides ≤ 1220mm for Panels **Up To** 6mm Thick	+/- 1.52mm
65-7155	65-7168	M	Cut Plastic Panel or Aluminum Plate **ANY** Side > 1220mm for Panels **Up To** 6mm Thick	
65-7151	65-7169	M	Cut Plastic Panel or Aluminum Plate **ALL** Sides ≤ 1220mm for Panels **Thicker Than** 6mm	
65-7153	65-7170	M	Cut Plastic Panel or Aluminum Plate **ANY** Side > 1220mm for Panels **Thicker Than** 6mm	

Shear Wire Mesh to Size

Part No.	Series	Service Type	Cut Tolerance
7095	F	Shear Wire Mesh **ALL** Sides ≤ 48"	+/- .060"
7100	F	Shear Wire Mesh **ANY** Side > 48"	
65-7095	M	Shear Wire Mesh **ALL** Sides ≤ 1220mm	+/- 1.52mm
65-7100	M	Shear Wire Mesh **ANY** Side > 1220mm	

Part Description:

The T-slot access routing for thick plastic panel and aluminum plate is used to enable a thicker panel or plate to be recessed within a T-slot with panel gasket. This service is for plastic panel or aluminum plate thicknesses of 375” (9.53mm) or .500” (12.7mm).

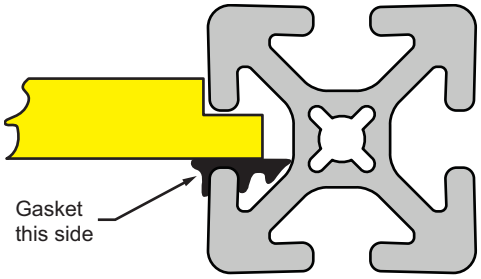

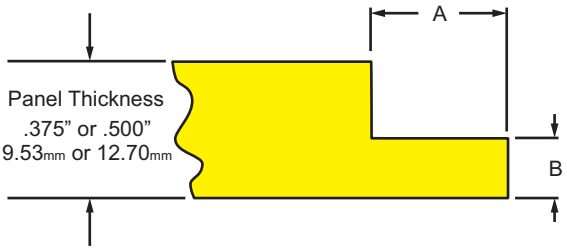

Panel Part No.	Aluminum Part No.	Series	Service Type	Description	A	B	Cut Tolerance
7530	7206	10	Routing Plastic Panel or Aluminum Plate **ALL** Sides ≤ 48”	To Mount 3/8” or 1/2” Plastic Panels or Aluminum Plate	.335”	.177”	**A** +/- .015” **B** +/- .010”
7531	7207	10	Routing Plastic Panel or Aluminum Plate **ANY** Side > 48”				
7532	7208	15	Routing Plastic Panel or Aluminum Plate **ALL** Sides ≤ 48”		.458”	.236”	
7533	7209	15	Routing Plastic Panel or Aluminum Plate **ANY** Side > 48”				
25-7530	25-7206	25	Routing Plastic Panel or Aluminum Plate **ALL** Sides ≤ 1220mm	To Mount 9.53mm or 12.70mm Plastic Panels or Aluminum Plate	9.00mm	4.50mm	**A** +/- .38mm **B** +/- .25mm
25-7531	25-7207	25	Routing Plastic Panel or Aluminum Plate **ANY** Side > 1220mm				
30-7532	30-7208	30	Routing Plastic Panel or Aluminum Plate **ALL** Sides ≤ 1220mm		9.50mm	6.00mm	
30-7533	30-7209	30	Routing Plastic Panel or Aluminum Plate **ANY** Side > 1220mm				
40-7532	40-7208	40	Routing Plastic Panel or Aluminum Plate **ALL** Sides ≤ 1220mm		13.00mm	6.00mm	
40-7533	40-7209	40	Routing Plastic Panel or Aluminum Plate **ANY** Side > 1220mm				
45-7534	---	45	Routing Plastic Panel or Aluminum Plate **ALL** Sides ≤ 1220mm		14.00mm	6.00mm	
45-7535	---	45	Routing Plastic Panel or Aluminum Plate **ANY** Side > 1220mm				

Edge Radius

Part Description:

The edge radius is used to round off either both or one sharp edge of highly visible panels. When both edges are rounded the radius will be equal to the panel thickness; when one edge is rounded the radius will equal to half the panel thickness with a minimum panel thickness of .250" (6.35mm). The edge radius can also help ease the insertion of panels into gasket. Edge radius services are for all four panel sides. Less than all four sides requires a drawing designating which sides receive the edge radius service.

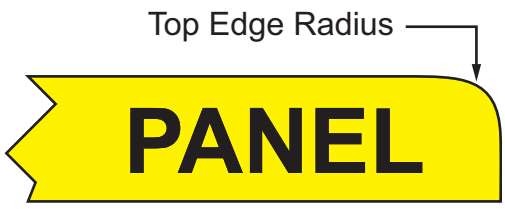

Full Edge Radius

Panels Part No.	Aluminum Part No.	Series	Service Type	Radius Tolerance
7500	7221	F	Full Edge Radius Plastic Panel or Aluminum Plate **ALL** Sides Less Than Or Equal To 48"	+/- .040"
7501	7222	F	Full Edge Radius Plastic Panel or Aluminum Plate **ANY** Side Greater Than 48"	
65-7500	65-7221	M	Full Edge Radius Plastic Panel or Aluminum Plate **ALL** Sides Less Than Or Equal To 1220mm	+/- 1.02mm
65-7501	65-7222	M	Full Edge Radius Plastic Panel or Aluminum Plate **ANY** Side Greater Than 1220mm	

*Minimum Panel Thickness is .125" (3.18mm). Maximum Panel Thickness is .500" (12.7mm).

Top Edge Radius

Panels Part No.	Aluminum Part No.	Series	Service Type	Radius Tolerance
7540	7542	F	Top Edge Radius Plastic Panel or Aluminum Plate **ALL** Sides Less Than Or Equal To 48"	+/- .040"
7541	7543	F	Top Edge Radius Plastic Panel or Aluminum Plate **ANY** Side Greater Than 48"	
65-7540	65-7542	M	Top Edge Radius Plastic Panel or Aluminum Plate **ALL** Sides Less Than Or Equal To 1220mm	+/- 1.02mm
65-7541	65-7543	M	Top Edge Radius Plastic Panel or Aluminum Plate **ANY** Side Greater Than 1220mm	

*Minimum Panel Thickness is .125" (3.18mm). Maximum Panel Thickness is .750" (19.05mm).

Part Description:

The corner radius is used to round corners on plastic panels or aluminum plates. The maximum radius is 3.00” (76.20mm). This service is commonly used for tabletops and workstations.

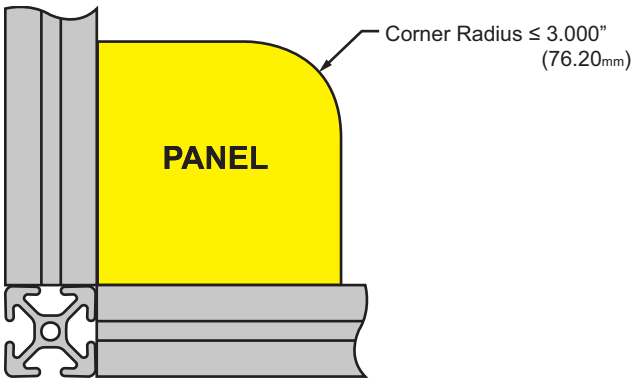

Panel Part No.	Aluminum Part No.	Series	Service Type	Tolerance
7179	7176	F	Corner Radius Plastic Panel or Aluminum Plate **RADIUS** ≤ 3.000” **Up To** .250” Thick	+/- .060”
7187	7195	F	Corner Radius Plastic Panel or Aluminum Plate **RADIUS** ≤ 3.000” **Thicker Than** .250”	
65-7179	65-7176	M	Corner Radius Plastic Panel or Aluminum Plate **RADIUS** ≤ 76.20mm **Up To** 6mm Thick	+/- 1.52mm
65-7187	65-7195	M	Corner Radius Plastic Panel or Aluminum Plate **RADIUS** ≤ 76.20mm **Thicker Than** 6mm	

Ordering Example:

2609 (1) @ (AD) 18.000” x (AB) 18.000”
w/ 7179 on Corner D 2.50”, R

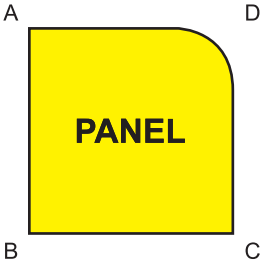

Profile Corner Clearance Notch

Part Description:

The profile corner clearance notch is used to clear a profile corner for perpendicularly mounted T-slot profiles when the panel will mount inside the T-slot. This notch is used on mesh, plastic panels, and aluminum up to .250" (6.35mm) thick.

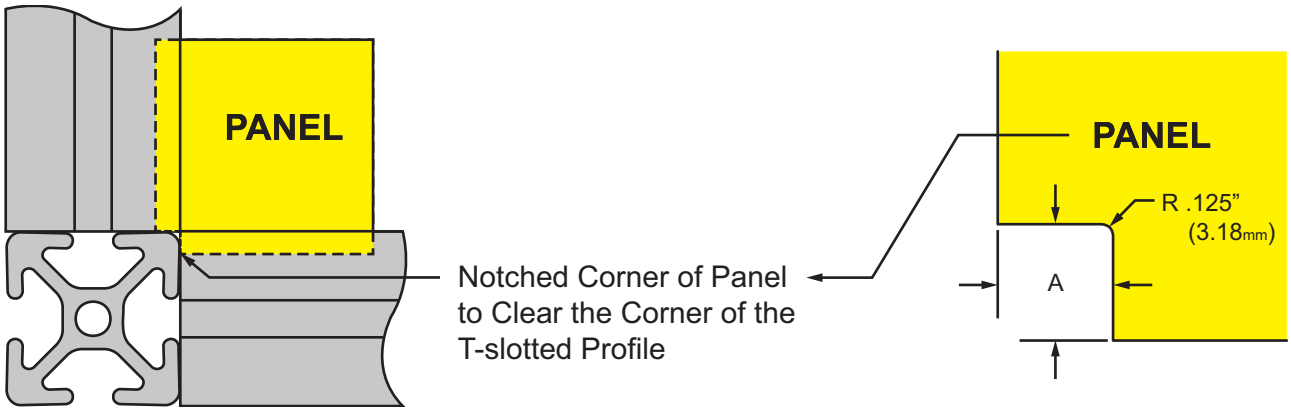

Panel & Wire Part No.	Aluminum Part No.	Series	Service Type	A	Cut Tolerance
7504	7202	10	Corner Notch	.312"	+/- .060"
7505	7203	15		.440"	
20-7504	20-7202	20		6.00mm	+/- 1.52mm
25-7504	25-7202	25		7.90mm	
30-7505	30-7203	30		9.00mm	
40-7505	40-7203	40		11.20mm	
45-7506	---	45		14.00mm	

Ordering Example:

2609 (1) @ (AD) 18.000" x (AB) 18.000"
w/ 7505 Horizontal on Corner B

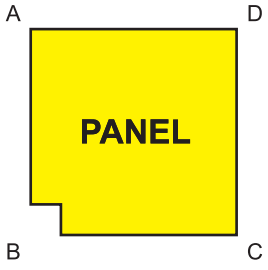

Full Profile Corner Clearance Notch

Part Description:

The full profile corner clearance notch is used to clear a T-slot profile when profiles are mounted perpendicularly. This notch is used on mesh, plastic panels, and aluminum up to .250" (6.35mm) thick.

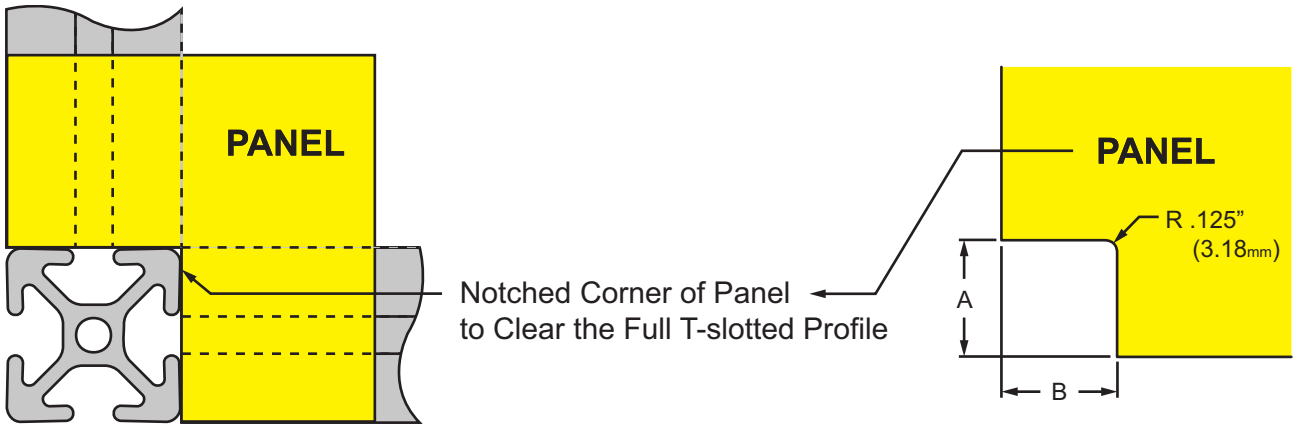

Panel & Wire Part No.	Aluminum Part No.	Series	Applicable Profiles	A	B	Cut Tolerance
7597	7231	10	1001, 1001-S, 1002, 1002-S, 1003, 1003-S, 1004, 1004-S, 1010, 1010-S, 1012, 1012-S	1.060"	1.060"	+/- .060"
7598	7232	10	1020, 1020-S	1.060"	2.060"	
7599	7233	10	2020, 2020-S	2.060"	2.060"	
7600	7234	15	1501, 1501-LS, 1502, 1502-LS, 1503, 1503-LS, 1504, 1504-LS, 1515, 1515-S, 1515-Lite, 1515-LS, 1515-UL, 1515-ULS, 1517, 1517-LS, 1547	1.560"	1.560"	
7601	7235	15	1530, 1530-Lite, 1530-LS, 1530-S, 1530-UL, 1530-ULS	1.560"	3.060"	
7602	7236	15	3030, 3030-Lite, 3030-S, 3030-LS	3.060"	3.060"	
20-7597	20-7231	20	20-2020	21.52mm	21.52mm	+/- 1.52mm
25-7597	25-7231	25	25-2501, 25-2502, 25-2503, 25-2504, 25-2525, 25-2527	26.52mm	26.52mm	
25-7598	25-7232	25	25-2550	26.52mm	51.52mm	
25-7599	25-7233	25	25-5050	51.52mm	51.52mm	
30-7600	30-7234	30	30-3001, 30-3002, 30-3003, 30-3004, 30-3030, 30-3022	31.52mm	31.52mm	
40-7600	40-7234	40	40-4001, 40-4002, 40-4003, 40-4004, 40-4030-Lite, 40-4040, 40-4040-Lite, 40-4040-UL, 40-4045-Lite	41.52mm	41.52mm	
40-7601	40-7235	40	40-4080, 40-4080-Lite	41.52mm	81.52mm	
40-7602	40-7236	40	40-8080	81.52mm	81.52mm	
45-7603	45-7237	45	45-4545, 45-4545-Lite	46.52mm	46.52mm	
45-7604	45-7233	45	45-4590	46.52mm	91.52mm	
45-7605	45-7239	45	45-9090	91.52mm	91.52mm	

Ordering Example:
2609 (1) @ (AD) 18.000" x (AB) 22.000"
w/ 7600 on Corner B

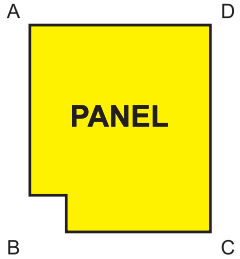

End Fastener Clearance Notch

Part Description:

The end fastener clearance notch is used to clear an end fastener tab when a panel will mount inside a T-slot. This notch is used on mesh, plastic panels and aluminum up to .250" (6.35mm) thick. See pages 218-220 for information on end fasteners.

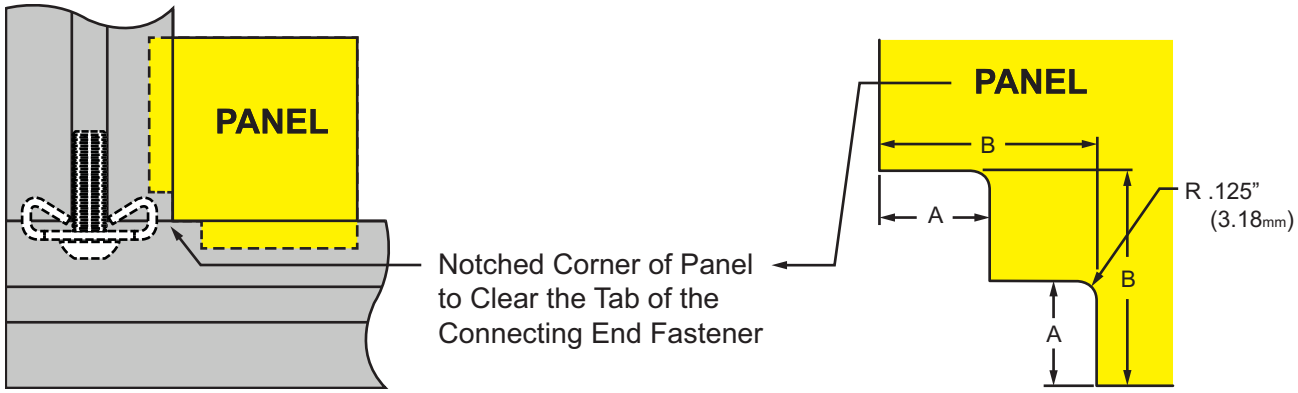

Panel & Wire Part No.	Aluminum Part No.	Series	Service Type	A	B	Cut Tolerance
7502	7211	10	Corner Notch	.250"	.650"	+/- .060"
7503	7214	15		.340"	.650"	
20-7512	20-7211	20		5.10mm	13.50mm	+/- 1.52mm
25-7502	25-7211	25		6.40mm	16.50mm	
30-7503	30-7214	30		8.60mm	14.50mm	
40-7503	40-7214	40		8.60mm	16.50mm	

Ordering Example:
2609 (1) @ (AD) 22.000" x (AB) 18.000"
w/ 7503 on Corner B

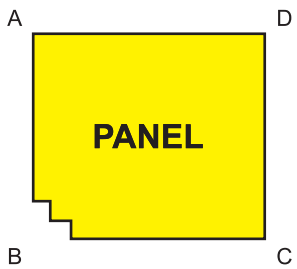

Part Description:

The anchor fastener clearance notch is used to clear an anchor fastener when a panel will mount inside a T-slot. This notch is used on mesh, plastic panels and aluminum plates up to .250" (6.35mm) thick. See pages 213-216 for information on anchor fasteners. **Additional Information:** When ordering this machining service, specify a vertical or horizontal orientation.

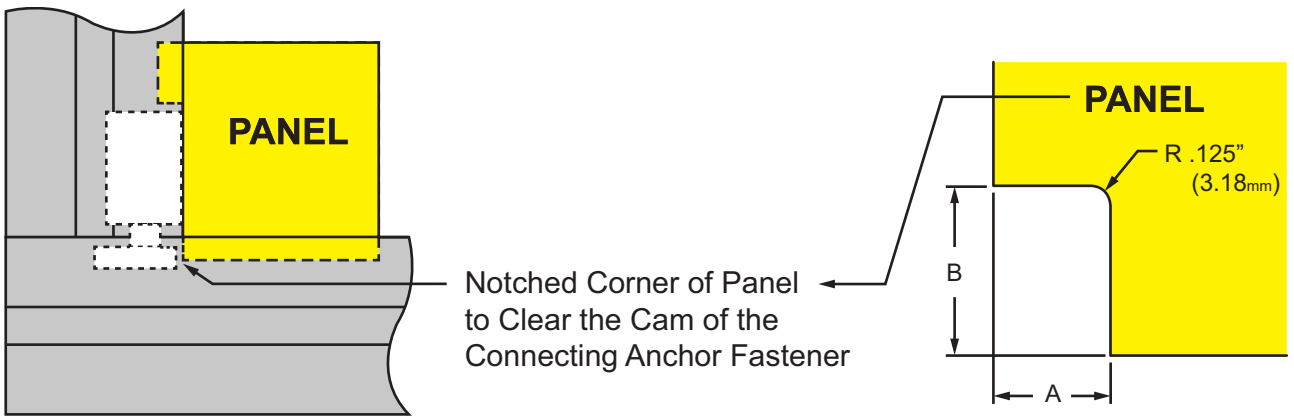

Panel & Wire Part No.	Aluminum Part No.	Series	Service Type	A	B	Cut Tolerance
7311	7215	10	Corner Notch	.375"	1.063"	+/- .060"
7312	7216	15		.500"	1.750"	
20-7311	20-7215	20		8.00mm	24.00mm	+/- 1.52mm
25-7311	25-7215	25		9.50mm	27.00mm	
30-7312	30-7216	30		11.00mm	34.00mm	
40-7312	40-7216	40		12.70mm	44.50mm	

Ordering Example:
2609 (1) @ (AD) 18.000" x (AB) 21.000"
w/ 7312 Vertical on Corner B

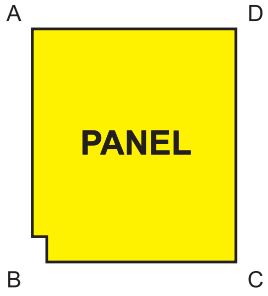

Central Connector Clearance Notch

Part Description:

The central connector clearance notch is used to clear a central connector when a panel will mount inside a T-slot. This notch is used on mesh, plastic panels and aluminum up to .250" (6.35mm) thick. See page 224 for information on central connectors. **Additional Information:** When ordering this machining service, specify a vertical or horizontal orientation.

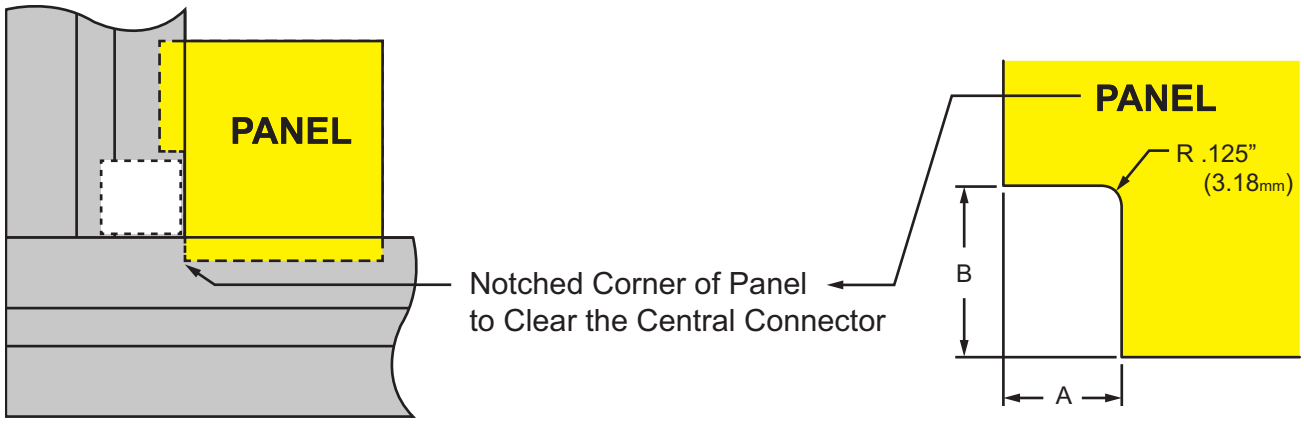

Panel & Wire Part No.	Aluminum Part No.	Series	Service Type	A	B	Cut Tolerance
7320	7204	15	Corner Notch	.500"	2.000"	+/- .060"
30-7320	30-7204	30		8.50mm	31.50mm	+/- 1.52mm
40-7320	40-7204	40		12.70mm	50.80mm	
45-7320	45-7204	45		14.00mm	46.00mm	

Ordering Example:

2609 (1) @ (AD) 23.000" x (AB) 28.000"
w/7320 Vertical on Corner B

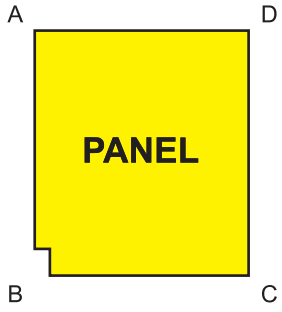

Part Description:

The corner connector clearance notch is used to clear corner connector tabs when a panel will mount inside a T-slot. This notch is used on mesh, plastic panels and aluminum plates up to .250" (6.35mm) thick.

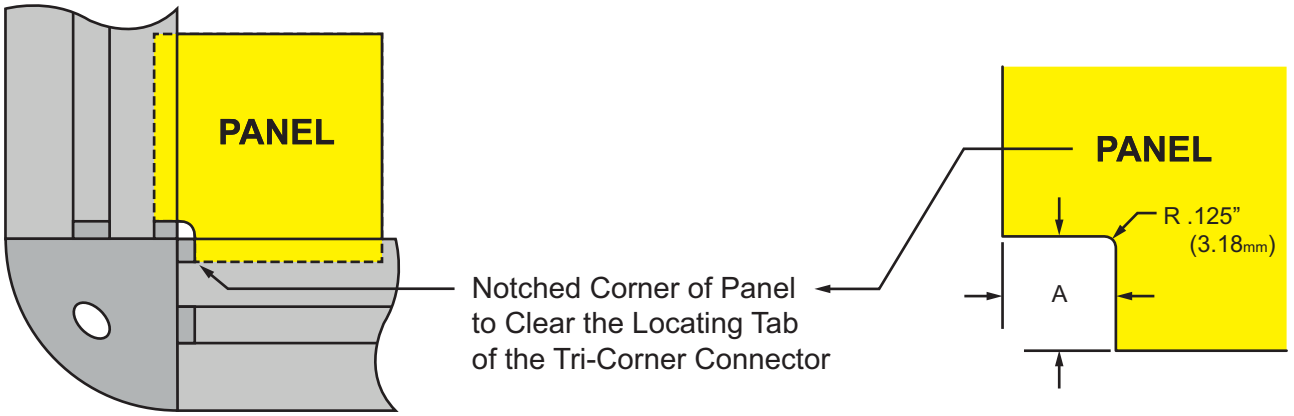

Panel & Wire Part No.	Aluminum Part No.	Series	Service Type	A	Cut Tolerance
7515	7217	10	Corner Notch	.347"	+/- .060"
7516	7218	15		.500"	
25-7515	25-7217	25		8.81mm	+/- 1.52mm
40-7516	40-7218	40		14.75mm	

Ordering Example:
2609 (1) @ (AD) 18.000" x (AB) 18.000"
w/ 7515 on Corner B

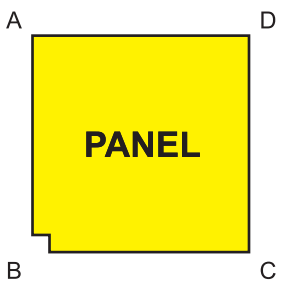

Inside Corner Connector Clearance Notch

Part Description:

The inside corner connector clearance notch is used to clear an inside corner connector when a panel will mount inside a T-slot. This notch is used on mesh, plastic panels and aluminum plates up to .250” (6.35mm) thick. See page 223 for information on inside corner connectors.

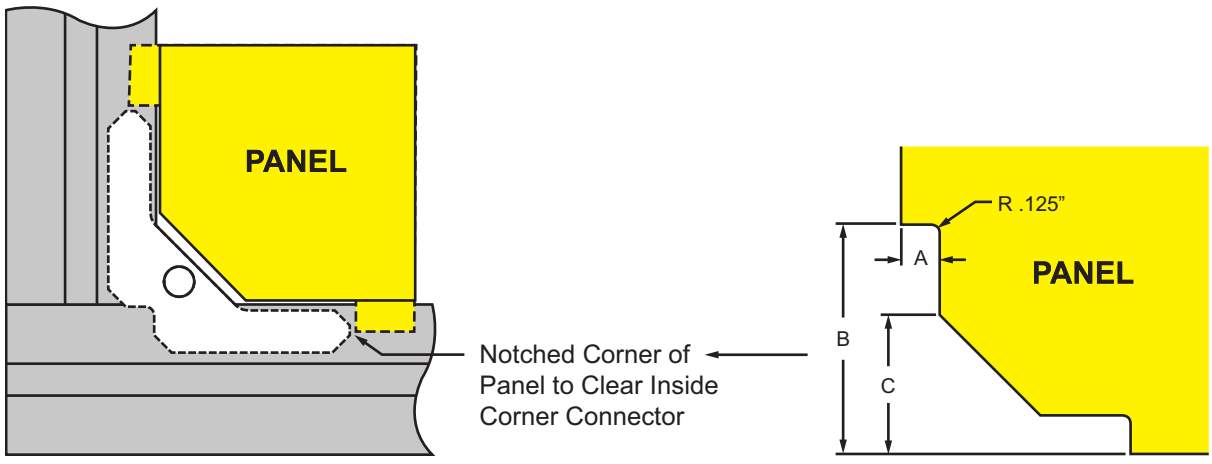

Panel & Wire Part No.	Aluminum Part No.	Series	Service Type	A	B	C	Cut Tolerance
7161	7219	15 40	Corner Notch	.435”	2.500”	1.393”	+/- .060”

Ordering Example:

2609 (1) @ (AD) 22.000” x (AB) 18.000”
w/ 7161 on Corner B

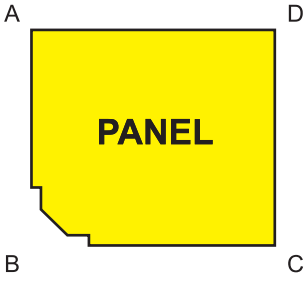

Part Description:

The hidden corner connector clearance notch is used to clear a hidden corner connector when a panel will mount inside a T-slot. See page 221 for information on hidden corner connectors. Two styles are available; one for the inside to inside corner connector and one for the inside to outside corner connector.
Additional Information: When ordering this machining service for inside to outside hidden corner connector, specify a vertical or horizontal orientation.

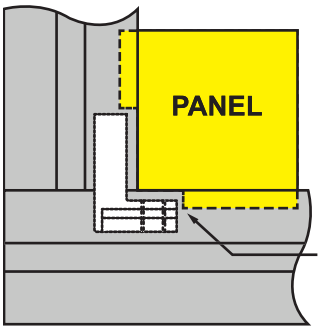

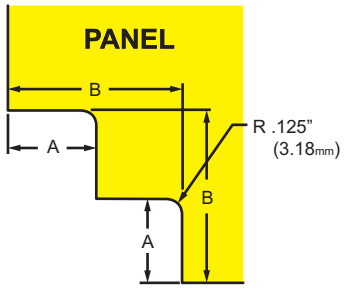

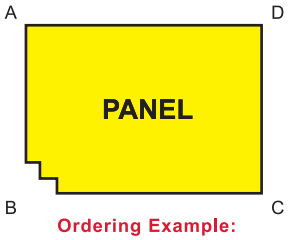

Ordering Example:
2609 (1) @ (AD) 22.000" x (AB) 18.000"
w/ 7522 on Corner B

Inside to Inside: 7422, 7522, 25-7422, 30-7522, 40-7522, 45-7522

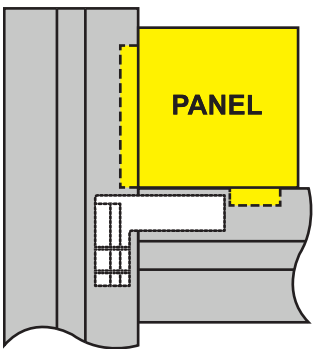

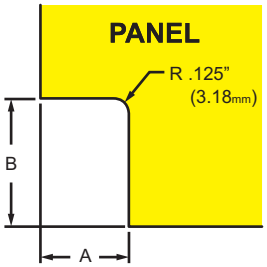

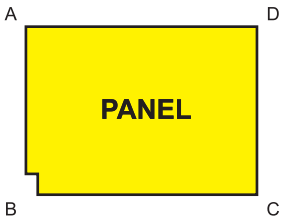

Ordering Example:
2609 (1) @ (AD) 18.000" x (AB) 21.000"
w/ 7523 Vertical on Corner B

Inside to Outside: 7423, 7523, 25-7423 30-7523, 40-7523, 45-7523

Panel & Wire Part No.	Series	Service Type	Connector Part No.	A	B	Cut Tolerance
7422	10	Corner Notch for Inside to Inside Hidden Connector	33440	.315"	1.063"	+/- .060"
7423	10	Corner Notch for Inside to Outside Hidden Connector	33460	.315"	1.063"	
7522	15	Corner Notch for Inside to Inside Hidden Connector	33450	.405"	1.263"	
7523	15	Corner Notch for Inside to Outside Hidden Connector	33470	.405"	1.263"	
25-7422	25	Corner Notch for Inside to Inside Hidden Connector	33440	8.00mm	27.00mm	+/- 1.52mm
25-7423	25	Corner Notch for Inside to Outside Hidden Connector	33460	8.00mm	27.00mm	
30-7522	30	Corner Notch for Inside to Inside Hidden Connector	33450	8.25mm	30.04mm	
30-7523	30	Corner Notch for Inside to Outside Hidden Connector	33470	8.25mm	30.04mm	
40-7522	40	Corner Notch for Inside to Inside Hidden Connector	33450	11.76mm	33.55mm	
40-7523	40	Corner Notch for Inside to Outside Hidden Connector	33470	11.76mm	33.55mm	
45-7522	45	Corner Notch for Inside to Inside Hidden Connector	33490	12.75mm	41.76mm	
45-7523	45	Corner Notch for Inside to Outside Hidden Connector	33530	12.75mm	41.76mm	

Bolt Connector / Plate Connector Clearance Notch

Part Description:

The bolt connector and plate connector clearance notches are used to clear a bolt connector or plate connector when a panel will mount inside a T-slot. This notch is used on mesh and plastic panels up to 6mm thick. See page 225 for information on bolt connectors and page 227 for plate connectors. **Additional Information:** When ordering this machining service, specify a vertical or horizontal orientation.

Bolt Connector Clearance Notch

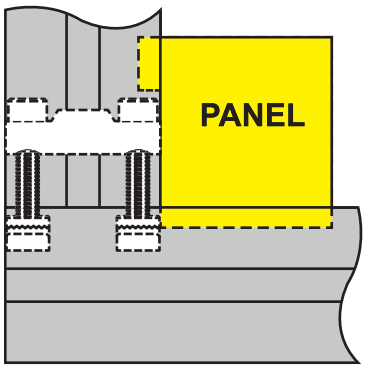

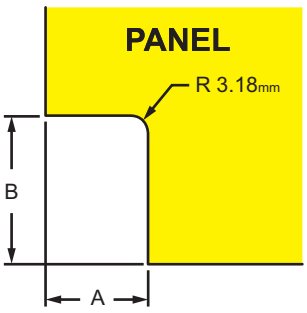

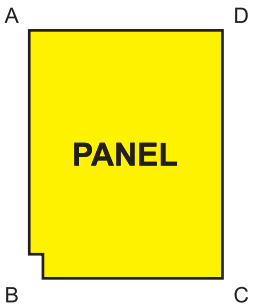

Ordering Example:
65-2609 (1) @ (AD) 580.00mm x (AB) 720.00mm
w/ 30-7314 Vertical on Corner B

Panel & Wire Part No.	Series	Service Type	A	B	Cut Tolerance
30-7314	30	Corner Notch	11.00mm	30.00mm	+/- 1.52mm
45-7317	45		14.00mm	47.00mm	

Plate Connector Clearance Notch

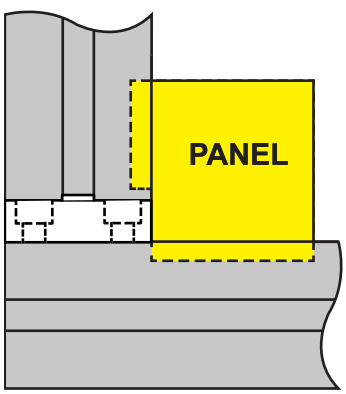

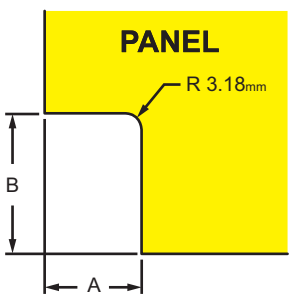

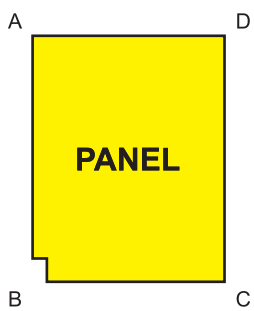

Ordering Example:
65-2609 (1) @ (AD) 580.00mm x (AB) 720.00mm
w/ 45-7323 Horizontal on Corner B

Panel & Wire Part No.	Series	Service Type	A	B	Cut Tolerance
45-7323	45	Corner Notch	14.00mm	27.00mm	+/- 1.52mm

Grabber™ Door Catch / Locking Grabber™ Handle Panel Milling

Part Description:

The Grabber™ door catch and Grabber™ handle milling services are used to add a handle to a plastic panel or aluminum plate. The Grabber™ door catch milling provides clearance for the door catch while the Grabber™ handle milling service machines a hole to enable quick and simple installation of the handle. See page 576 for information on the Grabber™ door catch and page 566 for the locking plastic panel Grabber™ handle.

Grabber™ Door Catch Panel Milling

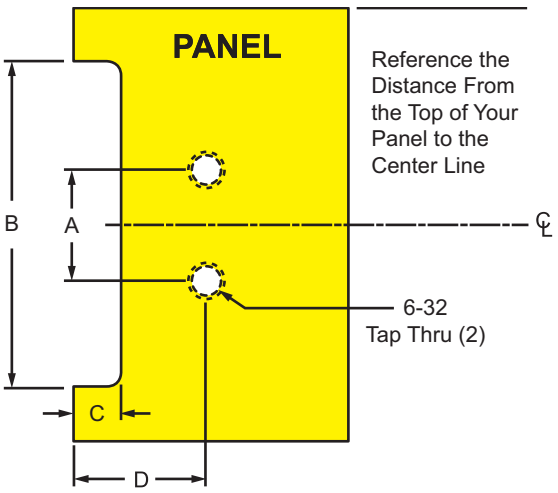

Part No.	Series	A	B	C	D	Cut Tolerance
7313	F	1.600"	4.750"	.313"	1.125"	+/- .020"
65-7313	M	40.60mm	120.70mm	8.00mm	28.60mm	+/- .50mm

Ordering Example:
2609 (1) @ (AD) 18.000" x (AB) 22.000"
w/ 7313 on Side AB @ 12.000"

(All machining center lines will be called out from point "A" on the panel)

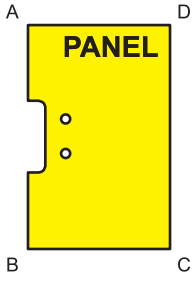

Locking Grabber™ Handle Panel Milling

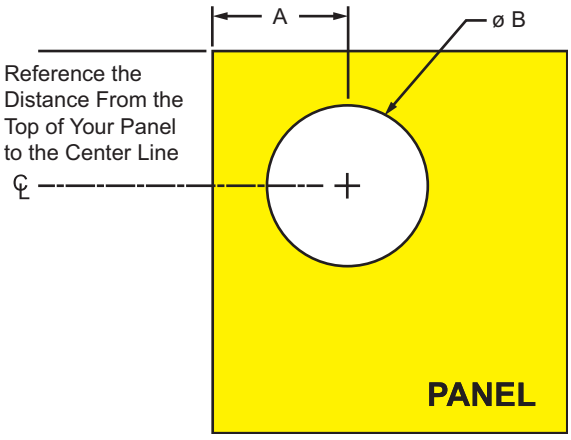

Part No.	Series	A	B	Hole Location Tolerance
7510	F	2.000"	2.000"	+/- .010"
65-7510	M	50.80mm	50.80mm	+/- .25mm

Ordering Example:
2609 (1) @ (AD) 18.000" x (AB) 18.000"
w/ 7510 on Side AB @ 9.000"

(All machining center lines will be called out from point "A" on the panel)

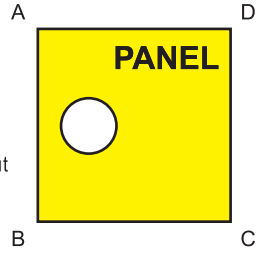

Flush Handle Plastic Panel Milling

Part Description:

The flush handle plastic panel milling service is used with plastic panels to provide a slot which enables quick installation of a flush plastic panel handle. For more information on this handle see page 564.

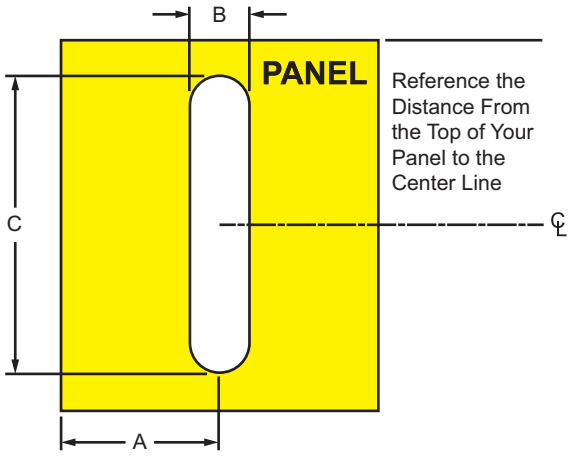

Part No.	Series	Handle Part No.	A	B	C	Hole Location Tolerance
7520	F	2056	2.000"	.625"	3.000"	+/- .010"
7521	F	2058	2.000"	.625"	4.125"	
65-7520	M	65-2056	50.80mm	15.88mm	76.20mm	+/- .25mm
65-7521	M	65-2058	50.80mm	15.88mm	104.78mm	

Ordering Example:

2609 (1) @ (AD) 18.000" x (AB) 20.000"
w/ 7520 side AB @ 10.000"

(All machining center lines will be called out from point "A" on the panel)

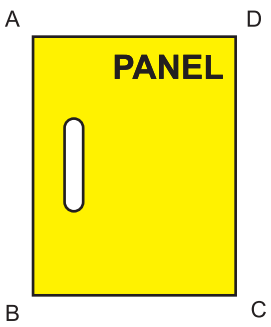

Adjustable Tension and Detent Hinge Plastic Panel Milling

Part Description:

The adjustable tension and detent hinge plastic panel milling is used to create through holes for mounting adjustable tension and detent panel hinges to a plastic panel. For more information on these hinges see pages 541-543, respectively.

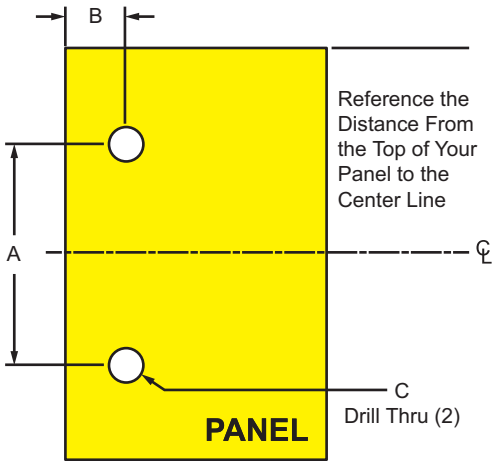

Part No.	Series	Hinge Part No.	Hinge Type	A	B	C	Hole Location Tolerance
7581	10	2081	Adjustable	1.250"	.438"	.201"	+/- .010"
7582	10	2071	Detent	1.250"	.440"	.188"	
7580	15	2080	Adjustable	1.880"	.688"	.375"	
7583	15	2091	Detent	1.340"	.530"	.250"	
25-7581	25	25-2081	Adjustable	31.75mm	11.13mm	5.11mm	+/- .25mm
25-7582	25	25-2071	Detent	31.75mm	11.18mm	4.78mm	
40-7580	40	40-2080	Adjustable	47.75mm	17.48mm	9.53mm	
40-7583	40	40-2091	Detent	34.04mm	13.46mm	6.35mm	

Ordering Example:

2609 (1) @ (AD) 18.000" x (AB) 20.000"
w/ 7581 on Side AB @ 5.000"

(All machining center lines will be called out from point "A" on the panel)

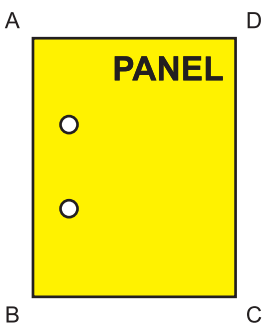

Plastic Door Handle / Steel Door Handle Plastic Panel Milling

Part Description:

The plastic door handle and steel door handle milling services provide through holes for mounting plastic and steel door handles to plastic panels. See page 558 for information on the plastic door handle and page 563 for the steel door handle.

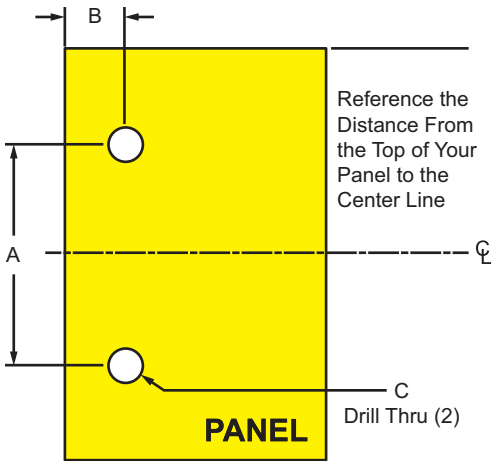

Plastic Door Handle

Part No.	Series	Handle Part No.	A	B	C	Hole Location Tolerance
7586	F	2062 / 2882	3.678"	1.250"	.313"	+/- .010"
7585	F	2061 / 2881	4.600"	1.250"	.375"	
7584	F	2060 / 2880	7.050"	1.250"	.375"	
25-7586	M	25-2062 / 25-2882	93.42mm	31.75mm	7.95mm	+/- .25mm
40-7585	M	40-2061 / 40-2881	116.84mm	31.75mm	9.53mm	
40-7584	M	40-2060 / 40-2880	179.04mm	31.75mm	9.53mm	

Steel Door Handle

Part No.	Series	Handle Part No.	A	B	C	Hole Tolerance
7587	F	2070	3.000"	1.000"	.188"	+/- .010"
65-7587	M	65-2070	76.20mm	25.40mm	4.78mm	+/- .25mm

Ordering Example:
2609 (1) @ (AD) 18.000" x (AB) 20.000"
w/ 7584 on Side AB @ 10.000"

(All machining center lines will be called out from point "A" on the panel)

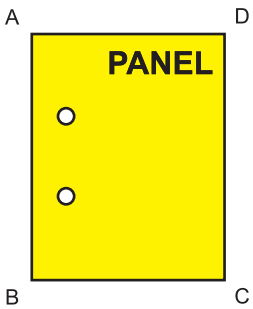

Part Description:

The panel mount block plastic panel milling service is used to provide a through hole for mounting a plastic panel to a panel mount block. For more information on panel mount blocks see pages 474-477.

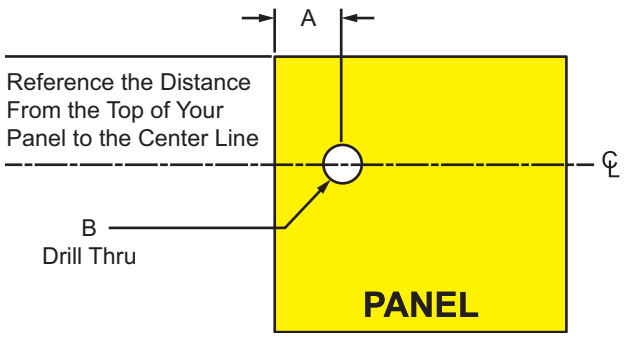

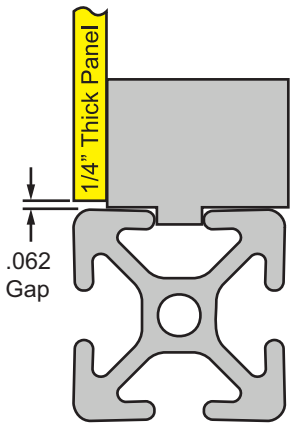

Part No.	Series	A	B	Hole Location Tolerance
7589	10	.313"	.313"	+/- .010"
7588	15	.375"	.375"	
25-7589	25	8.48mm	8.00mm	+/- .25mm
40-7588	40	10.08mm	10.00mm	

Ordering Example:
2609 (1) @ (AD) 18.000" x (AB) 18.000"
w/ 7589 on Side AB @ 9.000"

(All machining center lines will be called out
from point "A" on the panel)

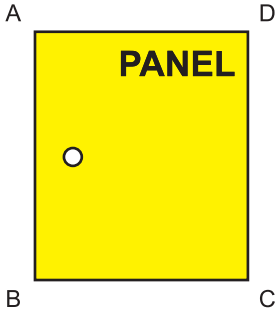

Panel Retainer Milling

Part Description:

The panel retainer milling service provides through holes for mounting a single arm narrow or wide retainer to plastic panels. See pages 484-487 for information on single arm panel retainers.

Single Arm Narrow Panel Retainer

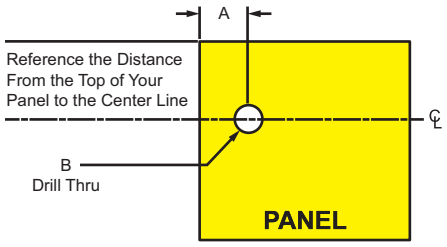

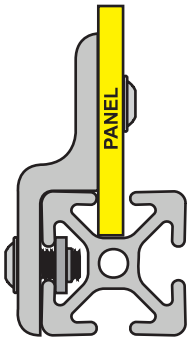

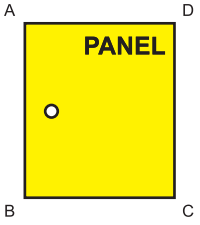

Ordering Example:
2609 (1) @ (AD) 18.000" x (AB) 18.000"
w/ 7593 on Side AB @ 4.500"

(All machining center lines will be called out from point "A" on the panel)

Part No.	Series	Retainer Part No.	A	B	Hole Location Tolerance
7593	10	2496 / 2512	.868"	.313"	+/- .010"
7595	15	2434 / 2515	1.290"	.375"	
20-7593	20	20-2496	16.80mm	6.15mm	+/- .25mm
25-7593	25	25-2496 / 25-2512	22.50mm	7.92mm	
30-7595	30	30-2434	24.80mm	9.52mm	
40-7595	40	40-2434 / 40-2515	35.50mm	9.52mm	
45-7595	45	45-2434	37.80mm	9.52mm	

Single Arm Wide Panel Retainer

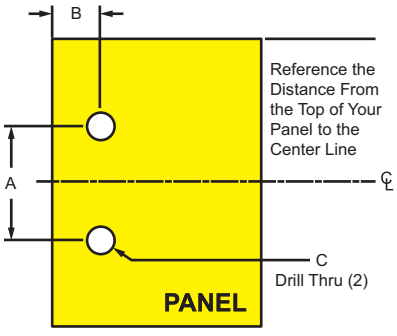

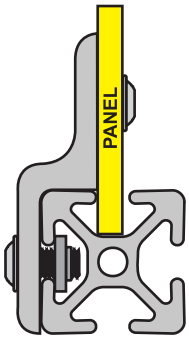

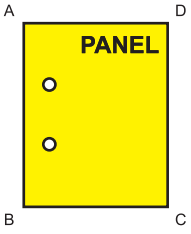

Ordering Example:
2609 (1) @ (AD) 18.000" x (AB) 20.000"
w/ 7594 on Side AB @ 8.000"

(All machining center lines will be called out from point "A" on the panel)

Part No.	Series	Retainer Part No.	A	B	C	Hole Location Tolerance
7594	10	2497 / 2513	1.000"	.868"	.313"	+/- .010"
7596	15	2433 / 2516	1.500"	1.290"	.375"	
20-7594	20	20-2497	20.00mm	16.80mm	6.15mm	+/- .25mm
25-7594	25	25-2497 / 25-2513	25.40mm	22.50mm	7.92mm	
30-7596	30	30-2433	30.00mm	24.80mm	9.52mm	
40-7596	40	40-2433 / 40-2516	38.10mm	35.50mm	9.52mm	
45-7596	45	45-2433	45.00mm	37.80mm	9.52mm	

Part Description:

The plastic panel and aluminum plate cutout machining services provide an opening commonly used for adding a door or access point for a guard or enclosure. **Additional Information:** A drawing is required with this machining service; for project design assistance, contact a Design Technician at www.8020.net.

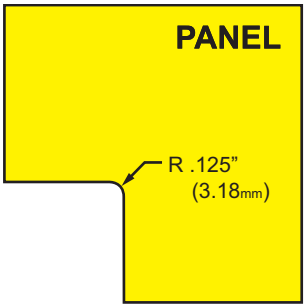

2 Sided Cutout

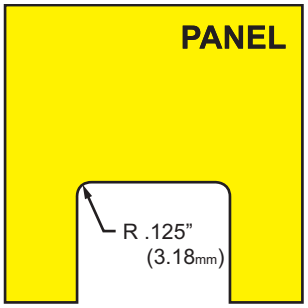

3 Sided Cutout

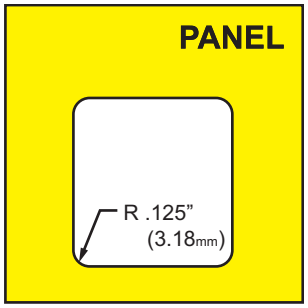

4 Sided Cutout

2 Sided Cutout

Panel Part No.	Aluminum Part No.	Series	Service Type	Cut Tolerance
7162	7171	F	2 Sided Cutout **ANY** Dimensions > 3.000" **Up To** .250" Thick	+/- .040"
7182	7190	F	2 Sided Cutout **ANY** Dimensions > 3.000" **Thicker Than** .250"	
65-7162	65-7171	M	2 Sided Cutout **ANY** Dimensions > 80mm **Up To** 6mm Thick	+/- 1.02mm
65-7182	65-7190	M	2 Sided Cutout **ANY** Dimensions > 80mm **Thicker Than** 6mm	

3 Sided Cutout

Panel Part No.	Aluminum Part No.	Series	Service Type	Cut Tolerance
7163	7172	F	3 Sided Cutout **ANY** Dimensions > 3.000" **Up To** .250" Thick	+/- .040"
7183	7191	F	3 Sided Cutout **ANY** Dimensions > 3.000" **Thicker Than** .250"	
65-7163	65-7172	M	3 Sided Cutout **ANY** Dimensions > 80mm **Up To** 6mm Thick	+/- 1.02mm
65-7183	65-7191	M	3 Sided Cutout **ANY** Dimensions > 80mm **Thicker Than** 6mm	

4 Sided Cutout

Panel Part No.	Aluminum Part No.	Series	Service Type	Cut Tolerance
7164	7173	F	4 Sided Cutout **ANY** Dimensions > 3.000" **Up To** .250" Thick	+/- .040"
7184	7192	F	4 Sided Cutout **ANY** Dimensions > 3.000" **Thicker Than** .250"	
65-7164	65-7173	M	4 Sided Cutout **ANY** Dimensions > 80mm **Up To** 6mm Thick	+/- 1.02mm
65-7184	65-7192	M	4 Sided Cutout **ANY** Dimensions > 80mm **Thicker Than** 6mm	

Top Mount Milling for Plastic Panel or Aluminum Plate

Part Description:

The top mount milling for plastic panels or aluminum plates provides clearance to mount the panel or plate to the face of a profile. This is commonly used for shelves, tabletops, and material handling carts.
Additional Information: The thickness of the panel or plate must be .250" (6mm) or thicker.

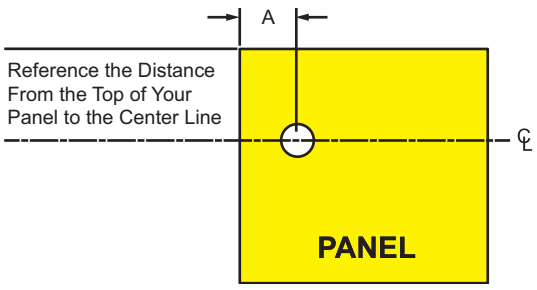

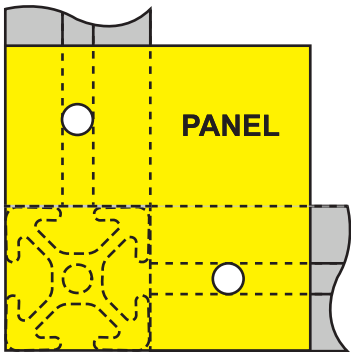

Part No.	Series	Service Type	A	Hole Location Tolerance
7507	10	Drill Thru 0.281" Panel 1/2" from Edge	.500"	+/- .010"
7509	10	Drill Thru & Countersink for 1/4" FHSCS - 1/2" from Edge	.500"	
7508	15	Drill Thru 0.328" Panel 3/4" from Edge	.750"	
7511	15	Drill Thru & Countersink for 5/16" FHSCS - 3/4" from Edge	.750"	
7512	15	Drill Thru & Countersink for 1/4" FHSCS - 3/4" from Edge	.750"	
20-7507	20	Drill Thru 5.56mm Panel 10.00mm from Edge	10.00mm	+/- .25mm
20-7509	20	Drill Thru & Countersink for M5 FHSCS - 10.00mm from Edge	10.00mm	
25-7507	25	Drill Thru 7.14mm Panel 12.50mm from Edge	12.50mm	
25-7509	25	Drill Thru & Countersink for M6 FHSCS - 12.50mm from Edge	12.50mm	
30-7508	30	Drill Thru 8.33mm Panel 15.00mm from Edge	15.00mm	
30-7511	30	Drill Thru & Countersink for M8 FHSCS - 15.00mm from Edge	15.00mm	
30-7512	30	Drill Thru & Countersink for M6 FHSCS - 15.00mm from Edge	15.00mm	
40-7508	40	Drill Thru 8.33mm Panel 20.00mm from Edge	20.00mm	
40-7511	40	Drill Thru & Countersink for M8 FHSCS - 20.00mm from Edge	20.00mm	
40-7512	40	Drill Thru & Countersink for M6 FHSCS - 20.00mm from Edge	20.00mm	
45-7508	45	Drill Thru 8.33mm Panel 22.50mm from Edge	22.50mm	
45-7511	45	Drill Thru & Countersink for M8 FHSCS - 22.50mm from Edge	22.50mm	
45-7512	45	Drill Thru & Countersink for M6 FHSCS - 22.50mm from Edge	22.50mm	

Ordering Example:
2609 (1) @ (AD) 18.000" x (AB) 18.000"
w/ 7589 on Side AB @ 9.000"

(All machining center lines will be called out from point "A" on the panel)

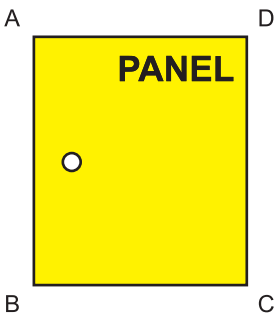

Part Description:

There are several milling services available to assist with custom mesh, plastic panels, and aluminum plate applications. **Additional Information:** A drawing is required with this machining service; for project design assistance contact a Design Technician at www.8020.net.

Circular Cutout Plastic Panel or Aluminum Plate

Panel Part No.	Aluminum Part No.	Series	Service Type	Tolerance
7152	7175	F	Circular Cutout Plastic Panel or Aluminum Plate > 1.000" Not to Exceed 10" **Up To** .250" Thick	+/- .010"
7186	7194	F	Circular Cutout Plastic Panel or Aluminum Plate > 1.000" Not to Exceed 10" **Thicker Than** .250"	
65-7152	65-7175	M	Circular Cutout Plastic Panel or Aluminum Plate > 25mm Not to Exceed 250mm **Up To** 6mm Thick	+/- .25mm
65-7186	65-7194	M	Circular Cutout Plastic Panel or Aluminum Plate > 25mm Not to Exceed 250mm **Thicker Than** 6mm	

Drill Thru Plastic Panel or Aluminum Plate

Panel Part No.	Aluminum Part No.	Series	Service Type	Tolerance
7159	7180	F	Drill Thru Plastic Panel or Aluminum Plate **Up To** .250" Thick	+/- .010"
7200	7198	F	Drill Thru Plastic Panel or Aluminum Plate **Thicker Than** .250"	
65-7159	65-7180	M	Drill Thru Plastic Panel or Aluminum Plate **Up To** 6mm Thick	+/- .25mm
65-7200	65-7198	M	Drill Thru Plastic Panel or Aluminum Plate **Thicker Than** 6mm	

Drill Thru and Countersink Plastic Panel or Aluminum Plate

Panel Part No.	Aluminum Part No.	Series	Service Type	Tolerance
7156	7177	F	Drill Thru & Countersink Plastic Panel or Aluminum Plate **Up To** .250" Thick	+/- .010"
7188	7196	F	Drill Thru & Countersink Plastic Panel or Aluminum Plate **Thicker Than** .250"	
65-7156	65-7177	M	Drill Thru & Countersink Plastic Panel or Aluminum Plate **Up To** 6mm Thick	+/- .25mm
65-7188	65-7196	M	Drill Thru & Countersink Plastic Panel or Aluminum Plate **Thicker Than** 6mm	

Drill Thru and Tap Plastic Panel or Aluminum Plate

Panel Part No.	Aluminum Part No.	Series	Service Type	Tolerance
7158	7178	F	Drill Thru & Tap Plastic Panel or Aluminum Plate **Up To** .250" Thick	+/- .010"
7189	7197	F	Drill Thru & Tap Plastic Panel or Aluminum Plate **Thicker Than** .250"	
65-7158	65-7178	M	Drill Thru & Tap Plastic Panel or Aluminum Plate **Up To** 6mm Thick	+/- .25mm
65-7189	65-7197	M	Drill Thru & Tap Plastic Panel or Aluminum Plate **Thicker Than** 6mm	

CONTINUE

Miscellaneous Panel Milling Services (Continued)

Miter Cut Plastic Panel or Aluminum Plate

Panel Part No.	Aluminum Part No.	Series	Service Type	Tolerance
7157	7181	F	Miter Cut Plastic Panel or Aluminum Plate **Up To** .250" Thick	+/- .010"
7201	7199	F	Miter Cut Plastic Panel or Aluminum Plate **Thicker Than** .250"	
65-7157	65-7181	M	Miter Cut Plastic Panel or Aluminum Plate **Up To** 6mm Thick	+/- .25mm
65-7201	65-7199	M	Miter Cut Plastic Panel or Aluminum Plate **Thicker Than** 6mm	

Miscellaneous Plastic Panel or Aluminum Plate

Panel Part No.	Aluminum Part No.	Series	Service Type	Tolerance
7166	7174	F	Miscellaneous Plastic Panel or Aluminum Plate Notch **ALL** Dimensions ≤ 3.000" **Up To** .250" Thick	+/- .010"
7185	7193	F	Miscellaneous Plastic Panel or Aluminum Plate Notch **ALL** Dimensions ≤ 3.000" **Thicker Than** .250"	
65-7166	65-7174	M	Miscellaneous Plastic Panel or Aluminum Plate Notch **ALL** Dimensions ≤ 75mm **Up To** 6mm Thick	+/- .25mm
65-7185	65-7193	M	Miscellaneous Plastic Panel or Aluminum Plate Notch **ALL** Dimensions ≤ 75mm **Thicker Than** 6mm	

Mill Finish Sanding Aluminum Plate

Aluminum Part No.	Series	Service Type	Tolerance
7513	F	Mill Finish Sanding Aluminum Plate **ALL** Dimensions ≤ 48"	—
7514	F	Mill Finish Sanding Aluminum Plate **ANY** Dimensions > 48"	
65-7513	M	Mill Finish Sanding Aluminum Plate **ALL** Dimensions ≤ 1220mm	—
65-7514	M	Mill Finish Sanding Aluminum Plate **ANY** Dimensions > 1220mm	

Pictorial Table Of Contents

Ball End Fold Out Combo Tool

Page 908

Ball Driver & "L" Wrench Set

Page 908

Ball End Power Bits

Page 909

Ball End "L" Hex Wrenches

Page 909

Cheater Pipe

Page 910

Ball End Hex Drivers

Page 910

"T" Ball End Hex Wrench
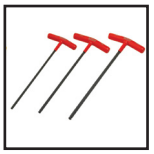
Page 911

Combination Wrenches

Page 911

Six Lobe Tools

Page 912

Ball End Hex Socket

Page 912

Access Hole Drills

Page 913

Access Hole Drill Jigs

Page 913

Anchor Fastener Counterbore Cutters

Page 914

Soft Face Mallet

Page 914

Roll Pin Punch

Page 915

Attitude Lapel Pins

Page 915

Fastener/Hex Tool Size Reference

This chart is a quick reference when looking for the correct size of hex wrench to use with 80/20 fasteners.

Thread Size	Fastener Head			
	SHCS	BHSCS	FBHSCS	FHSCS
8-32	---	3/32"	---	---
10-32	5/32"	1/8"	---	---
1/4-20	3/16"	5/32"	5/32"	5/32"
5/16-18	1/4"	3/16"	3/16"	3/16"
3/8-16	5/16"	---	---	7/32"
M5	4mm	3mm	---	3mm
M6	5mm	4mm	---	4mm
M8	6mm	5mm	---	5mm
M10	8mm	6mm	---	6mm

Ball End Fold Out Combo Tool / Ball Driver and "L" Wrench Set

Ball End Fold Out Combo Tool

65-6086

6087

65-6088

6089

Part No.	Series	Head Type	Included Tool Head Sizes	Weight
6087	F	Ball End	3/16", 7/32", 1/4", 5/16", 3/8"	.637 lb
6089	F	Hex End	5/64", 3/32", 7/64", 1/8", 9/64", 5/32", 3/16", 7/32", 1/4"	.342 lb
65-6086	M	Ball End	5mm, 6mm, 7mm, 8mm, 10mm	.3134 kg
65-6088	M	Hex End	2mm, 2.5mm, 3mm, 4mm, 5mm 6mm, 8mm	.1705 kg

Ball Driver and "L" Wrench Set

65-6106

6111

Part No.	Series	Included Tool Head Sizes	Weight
6111	F	.050", 1/16", 5/64", 3/32", 7/64", 1/8", 9/64", 5/32", 3/16", 7/32", 1/4", 5/16", 3/8"	.881 lb
65-6106	M	1.5mm, 2mm, 2.5mm, 3mm, 4mm, 5mm, 6mm, 8mm, 10mm	.3660 kg

Ball End Power Bits

Part No.	Series	Bit Size	Weight
6090	F	3/16"	.043 lb
6095	F	1/4"	.043 lb
65-6091	M	5mm	.0199 kg
65-6092	M	6mm	.0195 kg

Ball End "L" Hex Wrenches

Part No.	Series	Tool Head Size	Weight
6100	F	5/32"	.030 lb
6010	F	3/16"	.046 lb
6040	F	1/4"	.102 lb
65-6096	M	3mm	.0070 kg
65-6097	M	4mm	.0145 kg
65-6098	M	5mm	.0246 kg
65-6099	M	6mm	.0408 kg

Cheater Pipe

Part No.	Series	Description	Weight
6005	F M	Fits over "L" hex wrenches up to 1/4" (M6) size	.103 lb

Ball End Hex Drivers

Part No.	Series	Tool Head Size	Weight
6105	F	5/32"	.148 lb
6020	F	3/16"	.161 lb
6050	F	1/4"	.313 lb
65-6102	M	4mm	.0666 kg
65-6103	M	5mm	.0771 kg
65-6104	M	6mm	.1360 kg

"T" Handle Ball End Hex Wrenches

Part No.	Series	Tool Head Size	Weight
6110	F	5/32"	.159 lb
6000	F	3/16"	.327 lb
6030	F	1/4"	.409 lb
65-6107	M	4mm	.0730 kg
65-6108	M	5mm	.1510 kg
65-6109	M	6mm	.1737 kg

Combination Wrenches

Part No.	Series	Tool Head Size	Hex Nut Size	Weight
6065	F	7/16"	1/4-20	.158 lb
6080	F RT	1/2"	5/16-18	.189 lb

Six Lobe Tools

6072 6073 65-6068

Six Lobe Head Screw

6064 6066 6067

6074 6069 65-6071

Part No.	Series	Bit Size	Weight
6072	F M	Six Lobe Power Bit - T-27	.033 lb
6073	F M	Six Lobe Power Bit - T-40	.041 lb
65-6068	M	Six Lobe Power Bit - T-50	.0181 kg
6064	F M	Six Lobe "L" Wrench - T-27	.042 lb
6066	F M	Six Lobe "L" Wrench - T-40	.088 lb
6067	F M	Six Lobe "L" Wrench - T-50	.181 lb
6074	F M	Six Lobe "T" Handle Wrench - T-27	.300 lb
6069	F M	Six Lobe "T" Handle Wrench - T-40	.342 lb
65-6071	M	Six Lobe "T" Handle Wrench - T-50	.2939 kg

Ball End Hex Sockets

6001 6002 6003 6004

Part No.	Series	Socket Size	Weight
6001	F	3/16"	.116 lb
6002	F	1/4"	.149 lb
6003	M	5mm	.0548 kg
6004	M	6mm	.0657 kg

* Use with a 3/8" drive ratcheting or pneumatic socket wrench.

Access Hole Drills

Part No.	Series	Bit Size	Weight
6115	10	.201 x 2.30"	.023 lb
6070	15	.281 x 2.68"	.052 lb
25-6115	25	ø5.1mm	.0104 kg
40-6070	40	ø7.1mm	.0231 kg

Access Hole Drill Jigs

Fractional Part No.	Series	Description	Metric Part No.	Series	Description	Hole Size	Weight
6120	10	Jig for 1010 Profile	25-6120	25	Jig for 25-2525 Profile	.201" (5.1mm)	.142 lb
6131	10	Jig for 1020 Profile	25-6131	25	Jig for 25-2550 Profile	.201" (5.1mm)	.146 lb
6136	10	Jig for 2020 Profile	25-6136	25	Jig for 25-5050 Profile	.201" (5.1mm)	.290 lb
6121	10	Bushing for 10 Series	25-6121	25	Bushing for 25 Series	.201" (5.1mm)	.015 lb
6075	15	Jig for 1515 Profiles	40-6075	40	Jig for 40-4040 Profiles	.281" (7.1mm)	.342 lb
6130	15	Jig for 1530 Profiles	40-6130	40	Jig for 40-4080 Profiles	.281" (7.1mm)	.392 lb
6135	15	Jig for 3030 Profiles	40-6135	40	Jig for 40-8080 Profiles	.281" (7.1mm)	.852 lb
6076	15	Bushing for 15 Series	40-6076	40	Bushing for 40 Series	.281" (7.1mm)	.033 lb

Anchor Fastener Counterbore Cutters / Soft Face Mallet

80/20 Inc.

Anchor Fastener Counterbore Cutters

6160

25-6160

6060

40-6060

Part No.	Series	Mill Diameter	Weight
6160	10	9/16"	.180 lb
6060	15	13/16"	.335 lb
25-6160	25	14.3mm	.0816 kg
40-6060	40	20.0mm	.1859 kg

* Two flute center cutting

Soft Face Mallet

Part No.	Series	Weight
6055	F M QF	.753 lb

Roll Pin Punch

Part No.	Series	Weight
6117	RT	.293 lb

Attitude Lapel Pins

8020

8030

Part No.	Description	Weight
8020	Deluxe Attitude Lapel Pin	.004 lb
8030	Economy Attitude Lapel Pin	.005 lb

Registered Trademarks Used Throughout The 80/20® Catalog

3D ContentCentral® ..... is a registered trademark of Dassault Systèmes
3M™ ..... is a registered trademark of 3M Company
AutoCAD® ..... is a registered trademark of Autodesk Inc.
Grabber™ ..... is a registered trademark of Southco, Inc.
Inventor® ..... is a registered trademark of Autodesk Inc.
LNP™ Stat-Kon™ ..... is a registered trademark of SABIC
Loctite® ..... is a registered trademark of Henkel AG & Company
Mighty Mount® ..... is a registered trademark of WilliMount Corporation
PARTsolutions® ..... is a registered trademark of PARTsolutions, LLC
Solidworks® ..... is a registered trademark of SolidWorks Corporation
Velcro® ..... is a registered trademark of Velcro Industries B.V.
VHB™ ..... is a registered trademark of 3M Company
Wilsonart® ..... is a registered trademark of Premark RWP Holdings, Inc.
Wiremold® ..... is a registered trademark of The Wiremold Company

Metric / U.S. Customary Unit Equivalents

Linear				
inches	x 25.40	= millimeter (mm)	x 0.03937	= inches
feet	x 0.3048	= meters (m)	x 3.281	= feet
yards	x 0.9144	= meters (m)	x 1.0936	= yards
miles	x 1.6093	= kilometers (km)	x 0.6214	= miles
inches	x 2.540	= centimeters (cm)	x 0.3937	= inches
microinches	x 0.0254	= micrometers (um)	x 39.37	= microinches
Area				
$inches^2$	x 645.16	= $millimeters^2$ (mm^2)	x 0.00155	= $inches^2$
$inches^2$	x 6.452	= $centimeters^2$ (cm^2)	x 0.155	= $inches^2$
$feet^2$	x 0.0929	= $meters^2$ (m^2)	x 10.764	= $feet^2$
$yards^2$	x 0.8361	= $meters^2$ (m^2)	x 1.196	= $yards^2$
acres	x 0.4047	= hectares (10^4 m^2) or (ha)	x 2.471	= acres
$miles^2$	x 2.590	= $kilometers^2$ (km^2)	x 0.3861	= $miles^2$
Mass				
ounces (av)	x 28.35	= grams (g)	x 0.03527	= ounces (av)
pounds (av)	x 0.4536	= kilograms (kg)	x 2.2046	= pounds (av)
tons (2000 lb)	x 907.18	= kilograms (kg)	x 0.001102	= tons (2000 lb)
tons (2000 lb)	x 0.90718	= metric tons (t)	x 1.1023	= tons (2000 lb)
pounds/foot	x .671969	= kilograms/meter	x 1.4888	= pounds/foot
Force				
ounces - f	x 0.278	= newtons (N)	x 3.597	= ounces - f
pounds - f	x 4.448	= newtons (N)	x 0.2248	= pounds - f
kilograms - f	x 9.807	= newtons (N)	x 0.10197	= kilograms - f

Part Number Index

1001.....67, 79
1001-S.....67, 78
1002.....67, 81
1002-S.....67, 80
1003.....67, 83
1003-S.....67, 82
1004.....67, 85
1004-S.....67, 84
1010.....67, 77
1010-S.....67, 76
1012.....67, 87
1012-S.....67, 86
1020.....67, 91
1020-S.....67, 90
1030.....67, 93
1030-S.....67, 92
1050.....67, 88
1501.....68, 105
1501-LS.....68, 104
1502.....68, 107
1502-LS.....68, 106
1503.....68, 109
1503-LS.....68, 108
1504.....69, 111
1504-LS.....69, 110
1515.....68, 103
1515-Lite.....68, 101
1515-LS.....68, 100
1515-S.....68, 102
1515-UL.....68, 99
1515-ULS.....68, 98
1517.....69, 114
1517-LS.....69, 113
1530.....69, 124
1530-Lite.....69, 122
1530-LS.....69, 121
1530-S.....69, 123
1530-UL.....69, 120
1530-ULS.....69, 119
1534-Lite.....69, 116
1545.....69, 127
1545-LS.....69, 125
1545-S.....69, 126
1547.....69, 112
1575.....69, 115
2012.....67, 89
2015.....787
2020.....68, 95
2020-S.....68, 94
2021.....592
2022.....788
2025.....787
2026.....787
2028.....787
2030.....787
2035.....788
2036.....789
2037.....789
2040.....68, 97
2040-S.....68, 96
2045.....787
2046.....787
2050.....787
2051.....510
2052.....568
2053.....574
2054.....473
2055.....567
2056.....564
2057.....585
2058.....564
2059.....510
2060.....558
2061.....558
2062.....558
2063.....567
2064.....525
2065.....526
2066.....527
2067.....509
2068.....509
2069.....576
2070.....563
2071.....542
2073.....519
2074.....521
2075.....520
2076.....522
2077.....523
2078.....524
2079.....559
2080.....541
2081.....541
2082.....569
2083.....569
2084.....545
2085.....545
2086.....545
2087.....570
2088.....576
2089.....570
2090.....579
2091.....542
2093.....519
2094.....521
2095.....520
2096.....522
2097.....523
2098.....524
2099.....816
2100.....816
2101.....525
2102.....526
2103.....527
2104.....525
2105.....526
2106.....527
2107.....575
2108.....817
2109.....794
2110.....794
2111.....794
2112.....794
2113.....794
2114.....794
2115.....588
2116.....588
2117.....588
2118.....588
2119.....793
2120.....587
2121.....577
2122.....577
2123.....578
2124.....638
2125.....576
2126.....573
2127.....640
2128.....638
2129.....638
2130.....638
2131.....640
2132.....640
2133.....756
2134.....584
2135.....638
2136.....642
2137.....638
2138.....638
2139.....640
2140.....640
2141.....642

Visit product pages for additional size, anodize and color options.

Part Number Index

2142....642
2143....642
2144....758
2145....640
2146....642
2147....633
2148....636
2150....752
2151....752
2152....752
2153....752
2154....754
2155....754
2156....760
2157....760
2159....754
2160....754
2161....757
2162....756
2163....759
2164....758
2165....644
2166....644
2167....645
2168....645
2169....647
2170....645
2171....647
2172....756
2173....758
2175....645
2177....588
2178....588
2180....647
2181....613
2182....613
2183....613
2184....613
2186....612
2187....612
2188....612
2189....612
2190....616
2191....617
2192....616
2193....617
2194....616
2195....617
2200....616
2201....617
2202....616
2203....611
2204....611
2205....614
2207....615
2208....615
2209....615
2210....512
2211....512
2215....614
2216....614
2217....614
2220....513
2221....513
2230-BLU....812
2230-RED....812
2230-YEL....812
2240-BLU....812
2240-RED....812
2240-YEL....812
2250-BLU....812
2250-RED....812
2250-YEL....812
2264....813
2265....813
2270-BLU....812
2270-RED....812
2270-YEL....812
2272-BLU....812
2272-RED....812
2272-YEL....812
2280....516
2281....515
2282....515
2285....814
2286....821
2287....822
2290....515
2291....598
2292....598
2293....598
2294....598
2295....598
2296....598
2298....597
2299....597
2300....597
2305....597
2306....597
2307....597
2310....597
2311....601
2312....601
2314....601
2316....601
2317....599
2318....599
2321....600
2323....600
2324....534
2325....534
2326....534
2327....534
2328....534
2333....603
2334....603
2335....604
2336....604
2337....602
2338....602
2339....815
2340....753
2341....753
2349....755
2350....755
2361....638
2362....640
2363....642
2364....642
2365....638
2366....640
2367....642
2380....648
2385....648
2387....648
2390....648
2400....648
2404....650
2405....650
2406....634
2407....634
2408....634
2409....634
2410....648
2413....652
2414....650
2415....650
2416....650
2417....650
2418....631
2419....631
2420....631

Visit product pages for additional size, anodize and color options.

Part Number Index

2421....480
2422....480
2423....480
2424....586
2425....474
2426....631
2427....474
2428....481
2429....586
2430....481
2431....492
2432....490
2433....486
2434....484
2435....501
2436....500
2437....499
2438....498
2439....760
2440....760
2441....760
2442....506
2446....757
2447....756
2448....759
2449....758
2450....761
2451....761
2452....466
2453....466
2454....466
2455....466
2456....466
2457....466
2460....470
2461....470
2462....470
2463....470
2464....470
2465....590
2467....470
2468....470
2470....470
2471....470
2472....471
2473....471
2474....471
2475....471
2476....471
2477....471
2478....471
2479....470
2480....469
2481....469
2482....469
2483....467
2484....467
2485....467
2488....482
2489....482
2490....490
2491....500
2492....498
2493....492
2494....501
2495....499
2496....484
2497....486
2500....807
2501....807
2502....807
2503....807
2504....807
2505....807
2506....808
2507....808
2508....808
2509....808
2510....808
2511....808
2512....488
2515....488
2517....494
2518....502
2519....496
2520....503
2521....494
2522....502
2523....496
2524....503
2525....231
2526....231
2527....230
2528....230
2529....230
2530....231
2531....231
2532....230
2533....230
2534....230
2535....231
2536....231
2537....230
2538....230
2539....230
2540....231
2541....231
2542....230
2543....230
2544....230
2545....231
2546....230
2547....230
2548....230
2549....230
2550....231
2551....231
2552....231
2553....231
2554....231
2555....231
2556....230
2557....230
2558....230
2559....230
2560....231
2561....230
2562....230
2563....230
2564....230
2565....229
2566....229
2567....229
2568....229
2569....231
2570....229
2571....229
2572....229
2573....229
2574....229
2575....229
2576....231
2577....231
2578....231
2579....231
2580....231
2581....231
2582....231
2583....229
2584....229
2601....452
2602....452

Visit product pages for additional size, anodize and color options.

Part Number Index

2603....452
2604....452
2605....452
2606....452
2607....452
2608....452
2609....455
2610....455
2611....455
2612....455
2613-S....457
2613-T....457
2614-S....457
2614-T....457
2615....459
2616....459
2617....459
2618....459
2619....459
2620....459
2621....459
2622....459
2623....459
2624....459
2629....455
2630....455
2631....459
2632....459
2633....461
2634....461
2635....461
2636....461
2637....461
2640....462
2641....453
2642....453
2643....455
2644....455
2645....455
2646....456
2647....456
2648....454
2649....454
2650....460
2651....463
2652....463
2653....463
2654....463
2655....463
2656....463
2657....463
2658....463
2659....464
2660-S....458
2660-T....458
2661-S....458
2661-T....458
2662-S....458
2662-T....458
2663-S....458
2663-T....458
2664....464
2666....463
2667....463
2668....463
2669....463
2670....809
2673....809
2674....809
2675....809
2676....809
2700....605
2701....606
2702....608
2703....607
2704....605
2705....606
2708....605
2709....606
2712....605
2713....606
2714....609
2715....609
2716....609
2717....609
2730....566
2731....610
2745....580
2750....517
2751....518
2752....517
2753....518
2754....517
2755....518
2756....518
2757....517
2758....518
2759....518
2760....571
2761....571
2763....571
2765....571
2780....565
2781....565
2782....565
2796....749
2797....749
2798....750
2799....750
2800....468
2802....468
2804....468
2806....468
2808....465
2810....483
2811....483
2812....463
2813....463
2814....465
2815....465
2816....795
2817....795
2818....795
2819....795
2820....795
2821....795
2822....795
2823....795
2824....795
2825....795
2826....795
2827....795
2828....798
2829....589
2830....532
2831....531
2832....532
2833....531
2834....589
2835....533
2836....533
2837....530
2838....529
2839....530
2840....529
2841....533
2842....533
2843....824
2844....824
2845....824
2846....824
2849....825

Visit product pages for additional size, anodize and color options.

Part Number Index

2850.....825
2851.....823
2852.....823
2871.....795
2876.....797
2877.....797
2880.....558
2881.....558
2882.....558
2884.....561
2885.....561
2886.....561
2887.....561
2888.....562
2889.....562
2890 802
2891.....802
2892.....802
2893.....803
2894.....803
2895.....803
2899.....801
2900.....474
2901.....625
2902.....625
2903.....625
2904.....625
2905.....625
2906.....625
2907.....625
2908.....625
2910.....474
2922.....569
2923.....569
2927.....570
2929.....570
2932.....569
2933.....569
2937.....570
2939.....570
2952.....569
2953.....569
2957.....570
2959.....570
3000.....410
3002.....408
3004.....408
3005.....387
3006.....399
3007.....400
3010.....367
3011.....390
3012.....390
3017.....395
3018.....395
3022.....390
3024.....387
3030.....70, 131
3030-Lite.....70, 129
3030-LS.....70, 128
3030-S.....70, 130
3032.....387
3034-Lite.....69, 118
3035.....415
3042.....387
3044.....391
3048.....391
3050.....387
3051.....387
3052.....391
3053 400
3054.....387
3055.....399
3056.....391
3057.....391
3058.....391
3059.....387
3060.....70, 132
3061.....387
3062.....391
3063.....387
3064.....391
3065.....387
3066.....389
3067.....391
3068.....392
3071.....392
3072.....392
3075.....69, 117
3080.....392
3081.....392
3082.....392
3085.....385
3086.....385
3087.....385
3088.....385
3090.....215
3091.....215
3092.....216
3093.....216
3094.....215
3095.....215
3096.....216
3097.....216
3098.....215
3099.....216
3100.....215
3102.....216
3104.....387
3106.....392
3110.....392
3111 387
3112.....392
3114.....387
3115.....402
3116.....402
3117.....387
3118.....387
3119.....392
3120.....402
3122.....392
3123.....392
3124.....392
3125.....392
3126.....402
3127.....392
3128.....392
3129.....392
3130.....392
3131.....392
3132.....392
3133.....392
3134.....402
3140.....392
3150.....411
3151.....411
3152.....411
3153.....411
3154.....411
3183.....219
3189.....219
3201.....368
3202.....368
3203.....368
3204.....368
3205.....368
3206.....368
3208.....400
3214.....400
3215.....400
3258.....399
3260.....399

Visit product pages for additional size, anodize and color options.

Part Number Index

3261....399
3262....399
3266....788
3267....788
3272....787
3273....573
3274....787
3275....364
3276....364
3278....365
3279....366
3280....366
3281....366
3282....374
3283....374
3284....374
3285....367
3286....364
3287....367
3288....402
3289....412
3290....402
3293....404
3295....404
3297....404
3299....404
3300....410
3301....410
3302....410
3303....410
3304....409
3305....409
3306....409
3307....409
3308....409
3309....375
3310....375
3311....375
3312....375
3313....375
3315....409
3318....410
3319....410
3320....410
3321....408
3322....408
3323....410
3325....411
3330....390
3340....389
3342....389
3343....220
3344....220
3346....386
3348....386
3351....220
3352....220
3354....214
3355....410
3356....408
3357....410
3358....408
3359....213
3360....213
3361....214
3362....213
3363....213
3364....223
3365....409
3366....410
3367....407
3368....223
3369....217
3370....217
3371....407
3372....407
3373....213
3375....374
3376....374
3378....218
3379....218
3380....218
3381....218
3382....364
3383....219
3384....408
3385....408
3386....408
3387....408
3388....407
3389....219
3390....389
3391....214
3392....213
3393....407
3394....407
3395....213
3396....214
3397....409
3398....407
3399....407
3400....390
3405....390
3406....390
3407....408
3408....407
3409....408
3410....390
3411....390
3412....410
3414....408
3415....408
3416....407
3417....408
3418....407
3419....408
3420....390
3421....412
3422....412
3423....412
3424....412
3426....412
3427....412
3428....412
3429....412
3430....412
3431....412
3432....409
3433....409
3434....409
3435....409
3437....409
3439....410
3441....409
3442....409
3443....410
3445....410
3446....411
3450....411
3452....411
3454....411
3455....411
3456....411
3457....412
3458....412
3459....412
3460....411
3461....409
3462....411
3463....410
3464....411
3465....408

Visit product pages for additional size, anodize and color options.

Part Number Index

3466....411
3467....409
3468....411
3469....407
3470....412
3471....409
3472....412
3473....412
3474....411
3476....410
3478....410
3479....407
3480....408
3481....408
3482....407
3483....412
3484....407
3485....408
3486....408
3487....412
3488....412
3489....412
3490....408
3491....408
3492....408
3493....409
3494....408
3495....408
3496....408
3497....409
3498....408
3499....410
3500....398
3501....398
3520....407
3521....407
3522....407
3523....407
3524....408
3525....408
3526....409
3527....409
3528....409
3529....410
3530....410
3531....410
3532....408
3533....408
3534....408
3600....374
3601....389
3602....374
3603....389
3604....389
3605....375
3606....390
3607....390
3608....375
3609....387
3610....392
3611....387
3612....392
3613....412
3614....387
3615....392
3617....387
3618....409
3619....392
3620....409
3621....387
3622....392
3624....374
3625....397
3626....397
3627....392
3628....397
3630....410
3632....410
3634....411
3636....411
3638....412
3639....408
3640....411
3642....412
3645....390
3647....407
3649....390
3650....390
3656....400
3657....400
3658....399
3659....399
3660....213
3661....213
3662....213
3663....387
3665....213
3666....376
3667....376
3668....376
3669....376
3670....376
3671....392
3675....364
3676....365
3677....390
3678....365
3679....218
3680....218
3681....218
3682....218
3685....391
3686....364
3687....391
3688....387
3689....391
3690....387
3691....392
3692....387
3693....391
3694....387
3695....391
3696....387
3697....391
3698....387
3699....411
3703....368
3705....368
3709....400
3714....400
3716....406
3720....406
3737....411
3745....411
3747....395
3748....395
3749....395
3750....395
3751....395
3752....395
3753....395
3754....395
3755....395
3758....401
3759....401
3760....399
3762....399
3764....399
3766....788
3767....788
3778....365
3781....375

Visit product pages for additional size, anodize and color options.

Part Number Index

3782....374
3783....374
3784....374
3785....364
3786....364
3787....375
3788....375
3789....364
3790....374
3791....374
3792....220
3793....220
3794....220
3795....220
3800....366
3801....393
3802....388
3803....393
3804....388
3805....367
3806....393
3807....393
3808....388
3809....388
3810....394
3811....388
3812....394
3813....389
3814....394
3815....389
3816....417
3817....417
3818....394
3819....389
3820....400
3821....400
3822....394
3824....413
3825....416
3826....413
3827....413
3829....413
3830....415
3831....414
3832....415
3833....414
3834....417
3835....414
3836....364
3838....365
3839....394
3840....417
3841....415
3842....374
3843....374
3844....374
3845....415
3847....415
3849....414
3850....413
3851....402
3852....402
3853....402
3854....402
3855....415
3856....414
3857....402
3859....364
3860....399
3861....399
3862....415
3863....415
3864....417
3865....417
3866....368
3867....413
3868....368
3869....417
3870....416
3871....368
3872....415
3873....368
3874....417
3875....374
3876....374
3877....416
3878....417
3879....366
3880....416
3881....416
3882....416
3883....416
3884....416
3886....416
3887....417
3888....417
3889....416
3890....416
3891....218
3892....375
3894....375
3895....218
3896....213
3897....213
3898....375
3899....417
3900....367
3901....220
3902....220
3903....385
3906....385
3908....385
3910....385
3913....376
3914....376
3915....376
3916....376
3917....376
3919....376
3920....376
3921....376
3922....376
3923....376
3930....382
3931....382
3932....382
3933....382
3940....387
3941....387
3942....387
3943....388
3944....388
3945....388
3946....388
3947....388
3948....388
3950....392
3951....392
3952....392
3953....392
3954....392
3955....392
3956....392
3957....392
3958....392
3959....820
3960....411
3961....410
3962....412
3963....416
3964....416
3965....417

Visit product pages for additional size, anodize and color options.

Part Number Index

3970....411
3971....410
3972....412
3974....416
3975....417
4001....348
4002....349
4003....350
4004....360
4005....360
4006....361
4007....362
4008....362
4009....363
4013....302
4014....316
4015....305
4016....317
4017....318
4020....315
4021....275
4022....277
4023....281
4024....745
4025....715
4026....716
4027....717
4028....729
4029....730
4030....731
4031....732
4032....733
4033....734
4041....334
4042....331
4051....746
4053....747
4055....748
4061....256
4080....283
4081....282
4101....300
4107....235
4108....284
4110....262
4111....306
4112....273
4113....296
4114....310
4115....297
4116....741
4117....237
4118....236
4119....285
4120....255
4121....308
4122....307
4123....272
4124....743
4125....276
4126....259
4127....260
4128....261
4129....258
4130....742
4131....744
4132....327
4133....735
4134....329
4135....278
4136....328
4137....736
4138....330
4139....737
4140....271
4141....270
4142....738
4143....264
4145....266
4147....740
4148....739
4149....351
4150....253
4151....254
4152....257
4153....356
4154....356
4155....274
4156....357
4157....358
4158....358
4159....359
4160....279
4161....726
4162....727
4163....728
4164....268
4165....240
4166....239
4167....238
4168....723
4169....724
4170....280
4171....725
4172....718
4174....336
4175....303
4176....294
4177....714
4178....722
4180....720
4181....712
4183....721
4184....713
4185....719
4186....347
4187....345
4188....346
4195....355
4196....352
4197....354
4198....354
4199....353
4250....295
4251....314
4260....301
4265....286
4266....309
4280....295
4281....314
4285....304
4286....304
4290....301
4295....286
4296....309
4301....297
4302....285
4303....296
4304....310
4305....237
4306....236
4307....235
4308....308
4309....307
4310....272
4311....306
4312....273
4313....728
4315....263
4316....262
4317....741
4318....743

Visit product pages for additional size, anodize and color options.

Part Number Index

4319....742
4320....255
4321....723
4322....724
4323....725
4324....744
4325....276
4326....259
4327....260
4328....261
4329....258
4330....265
4331....264
4332....327
4333....735
4334....329
4335....278
4336....328
4337....736
4338....330
4339....737
4340....271
4341....270
4342....738
4343....718
4345....267
4346....266
4347....740
4348....739
4349....351
4350....253
4351....254
4352....257
4353....356
4354....356
4355....274
4356....357
4357....358
4358....358
4359....359
4360....279
4361....268
4362....269
4363....726
4364....727
4365....240
4366....239
4367....238
4370....280
4371....343
4372....340
4375....303
4376....294
4377....714
4379....722
4380....720
4381....712
4383....721
4384....713
4385....719
4386....347
4387....345
4388....346
4390....341
4392....342
4394....344
4395....355
4396....352
4397....354
4398....354
4399....353
4401....348
4402....349
4403....350
4404....360
4405....360
4406....361
4407....362
4408....362
4409....363
4413....302
4414....316
4415....305
4416....317
4417....318
4420....315
4421....275
4422....277
4423....281
4424....745
4425....715
4426....716
4427....717
4428....729
4429....730
4430....731
4431....732
4432....733
4433....734
4441....334
4442....331
4451....746
4453....747
4455....748
4461....256
4468....336
4480....283
4481....282
4483....591
4486....581
4487....582
4488....554
4489....553
4490....504
4503....322
4504....323
4505....245
4506....244
4509....321
4510....241
4511....324
4512....325
4513....326
4514....246
4515....247
4518....252
4519....250
4520....251
4521....242
4522....243
4523....248
4524....249
4600....419
4601....419
4605....420
4606....420
4607....420
4608....420
4609....420
4610....420
4611....420
4615....419
4616....419
4625....424
4626....424
4700....422
4701....421
4702....422
5005....836
5010....837
5015....836
5020....837

Visit product pages for additional size, anodize and color options.

Part Number Index

5025....836
5030....837
5035....835
5036....835
5040....835
5041....835
5045....835
5046....835
5050....768
5100....768
5125....769
5150....769
5200....768
5250....769
5300....768
5340....781
5350....769
5360....780
5370....780
5400....770
5415....771
5425....771
5450....770
5475....771
5525....771
5550....774
5575....773
5600....774
5625....773
5650....775
5675....773
5700....772
5750....772
5845....777
5850....777
5860....778
5870....778
5880....778
5890....778
5900....777
5910....779
5920....779
5930....779
5940....779
5950....777
6000....911
6001....912
6002....912
6003....912
6004....912
6005....910
6010....909
6020....910
6030....911
6040....909
6050....910
6055....914
6060....914
6064....912
6065....911
6066....912
6067....912
6069....912
6070....913
6072....912
6073....912
6074....912
6075....913
6076....913
6080....911
6087....908
6089....908
6090....909
6095....909
6100....909
6105....910
6110....911
6111....908
6115....913
6117....915
6120....913
6121....913
6130....913
6131....913
6135....913
6136....913
6160....914
6415....663
6416....665
6423....671
6424....673
6425....667
6426....669
6490....698
6491....698
6515....663
6516....665
6523....671
6524....673
6525....667
6526....669
6530....675
6531....677
6533....683
6534....685
6535....679
6536....681
6590....698
6591....698
6595....699
6596....699
6700....703
6701....703
6702....704
6703....704
6705....701
6706....701
6710....511
6715....663
6716....665
6723....671
6724....673
6725....667
6726....669
6730....690
6731....690
6732....691
6733....691
6734....692
6735....692
6736....693
6737....693
6760....686
6762....687
6764....688
6766....689
6780....705
6792....702
6793....702
6797....700
6798....700
6800....706
6801....707
6802....710
6803....708
6804....709
6805....706
6806....706
6807....706
6808....511
6810....703
6811....703

Visit product pages for additional size, anodize and color options.

Part Number Index

6812....704
6813....704
6814....701
6815....663
6816....665
6817....701
6823....671
6824....673
6825....667
6826....669
6830....675
6831....677
6833....683
6834....685
6835....679
6836....681
6847....782
6850....706
6851....708
6852....709
6860....686
6862....687
6864....688
6866....689
6870....690
6871....690
6872....690
6873....691
6874....691
6875....691
6876....692
6877....692
6878....692
6879....693
6881....705
6883....693
6884....693
6892....702
6893....702
6897....700
6898....700
7000....859
7001....860
7003....859
7005....859
7006....861
7007....861
7008....861
7009....861
7010....859, 860
7012....859
7013....859
7014....861
7015....861
7016....861
7017....861
7020....859, 860
7021....859
7023....859
7024....861
7025....861
7026....861
7028....861
7029....861
7030....859
7031....861
7032....861
7033....861
7035....861
7036....861
7037....861
7038....861
7039....861
7040....865
7041....865
7042....865
7043....865
7045....861
7046....861
7047....861
7048....861
7049....861
7050....863
7051....863
7052....861
7053....861
7054....861
7055....861
7056....861
7057....861
7058....878
7059....861
7060....861
7061....861
7062....879
7063....861
7064....861
7065....868
7066....868
7067....861
7068....879
7070....868
7071....868
7072....868
7073....868
7074....870
7075....868
7076....868
7079....870
7080....871
7081....871
7082....870
7083....870
7084....871
7085....868
7086....871
7087....868
7090....871
7092....870
7093....871
7094....870
7095....884
7098....877
7099....877
7100....884
7101....877
7102....877
7103....877
7104....877
7105....883
7106....883
7110....876
7117....865
7118....865
7150....884
7151....884
7152....905
7153....884
7155....884
7156....905
7157....906
7158....905
7159....905
7161....894
7162....903
7163....903
7164....903
7166....906
7167....884
7168....884
7169....884
7170....884

Visit product pages for additional size, anodize and color options.

Part Number Index

7171....903
7172....903
7173....903
7174....906
7175....905
7176....887
7177....905
7178....905
7179....887
7180....905
7181....906
7182....903
7183....903
7184....903
7185....906
7186....905
7187....887
7188....905
7189....905
7190....903
7191....903
7192....903
7193....906
7194....905
7195....887
7196....905
7197....905
7198....905
7199....906
7200....905
7201....906
7202....888
7203....888
7204....892
7205....860
7206....885
7207....885
7208....885
7209....885
7210....860
7211....890
7212....860
7213....860
7214....890
7215....891
7216....891
7217....893
7218....893
7219....894
7221....856
7222....856
7224....860
7231....859
7232....859
7233....859
7234....859
7235....859
7236....859
7240....872
7241....873
7243....873
7244....872
7245....873
7246....863, 872
7247....873
7248....872
7256....866
7257....866
7300....883
7301....883
7302....883
7305....874
7310....860
7311....891
7312....891
7313....897
7315....875
7320....892
7400....881, 694
7401....881, 694
7422....895
7423....895
7500....886
7501....886
7502....890
7503....890
7504....888
7505....888
7507....904
7508....904
7509....904
7510....897
7511....904
7512....904
7513....906
7514....906
7515....893
7516....893
7520....898
7521....898
7522....895
7523....895
7530....885
7531....885
7532....885
7533....885
7540....886
7541....886
7542....886
7543....886
7580....899
7581....899
7582....899
7583....899
7584....900
7585....900
7586....900
7587....900
7588....901
7589....901
7593....902
7594....902
7595....902
7596....902
7597....889
7598....889
7599....889
7600....889
7601....889
7602....889
8020....915
8030....915
8110....832
8111....832
8115....832
8116....832
8120....832
8121....832
8125....832
8126....832
8210....838
8211....838
8212....838
8213....838
8215....838
8216....838
8217....838
8218....838
8220....838
8221....838
8222....838
8223....838

Visit product pages for additional size, anodize and color options.

Part Number Index

8225....838
8226....838
8230....838
8231....838
8232....838
8233....838
8235....838
8236....838
8240....838
8241....838
8303....829
8304....829
8305....831
8306....831
8307....829
8308....829
8310....829
8311....829
8313....831
8314....831
8315....829
8316....829
8317....829
8318....829
8319....831
8320....829
8321....829
8322....829
8323....829
8325....829
8326....829
8327....829
8328....829
8330....829
8331....829
8335....829
8336....829
8337....829
8338....829
8340....829
8341....829
8342....829
8343....829
8345....829
8346....829
8360....829
8361....829
8365....829
8366....829
8370....829
8371....829
8375....829
8376....829
8385....829
8386....829
8390....829
8391....829
8392....831
8394....831
8395....831
8397....831
8399....831
8400....831
8401....831
8402....831
8403....831
8405....831
8406....831
8407....831
8408....831
8413....833
8414....833
8415....839
8416....839
8417....847
8418....847
8419....831
8420....831
8422....831
8424....831
8426....847
8427....847
8445....843
8446....843
8448....843
8449....843
8507....854
8508....854
8510....852
8511....852
8512....853
8513....853
8515....852
8516....852
8520....848
8521....848
8525....849
8526....849
8527....849
8528....849
8530....848
8531....848
8535....849
8536....849
8540....849
8541....849
8545....842
8546....842
8547....842
8548....842
8550....844
8551....844
8555....844
8556....844
8560....841
8561....841
8565....846
8566....846
8567....846
8568....846
8570....855
8575....855
8580....850
8581....850
8582....850
8583....850
8584....851
8585....851
8586....851
8587....851
8591....845
8592....845
8593....845
8594....845
8600....834
8601....834
8605....834
8606....834
8610....853
8611....853
8620....840
8621....840
8625....840
8626....840
8630....840
8631....840
8635....840
8636....840
8703....831
8704....831
8710....831
8711....831

Visit product pages for additional size, anodize and color options.

Part Number Index

8713.....831
8714.....831
8720.....831
8721.....831
8722.....831
8723.....831
8724.....831
8725.....831
8900.....368
8901.....368
9000.....74, 191
9005.....74, 192
9010.....74, 193
9015.....74, 194
9025.....74, 195
9030.....74, 196
9035.....74, 197
9110.....792
9113.....435
9115.....425
9120.....426
9130.....429
9140.....427
9150.....430
9153.....436
9160.....431
9170.....432
9180.....433
9190.....434
9198.....437
9210.....792
9213.....435
9215.....425
9220.....426
9230.....429
9240.....427
9242.....428
9245.....439
9250.....430
9253.....436
9260.....431
9270.....432
9273.....438
9275.....440
9280.....433
9290.....434
9297.....441
9300.....507
9301.....396
9302.....396
9305.....508
9306.....396
9307.....396
9310.....507
9315.....579
9320.....396
9325.....396
9330.....442
9350.....630
9351.....630
9355.....505
9356.....505
9361.....598
9700.....74, 184
9701.....74, 185
9705.....74, 186
9706.....74, 187
9725.....74, 188
9726.....74, 189
9728.....74, 190
9750.....856
9755.....792
9760.....423
9820.....764
9821.....764
9822.....764
9823.....764
9824.....764
9825.....764
9826.....764
9827.....764
9828.....764
9829.....764
9830.....764
9831.....764
9840.....762
9841.....762
9842.....762
9843.....762
9844.....762
9845.....762
9846.....762
9847.....762
9848.....762
9860.....765
9861.....765
9862.....765
9863.....765
9864.....765
9865.....765
9866.....765
9867.....765
9868.....765
12000.....560
12003.....796
12004.....796
12006.....798
12013.....796
12015.....816
12016.....816
12017.....514
12018.....514
12019.....583
12020.....514
12021.....514
12022.....515
12024.....514
12026.....805
12027.....805
12028.....629
12030.....289
12031.....288
12032.....291
12033.....290
12034.....292
12035.....293
12036.....311
12037.....311
12038.....299
12039.....312
12040.....313
12041.....791
12043.....791
12044.....791
12045.....791
12047.....791
12050.....476
12051.....479
12053.....479
12055.....479
12057.....478
12058.....478
12062.....550
12064.....551
12065.....551
12067.....547
12068.....540
12069.....540
12070.....540
12071.....538
12072.....537
12073.....537

Visit product pages for additional size, anodize and color options.

Part Number Index

12074....546
12075....546
12080....544
12084....555
12085....556
12086....556
12087....556
12088....555
12089....555
12093....552
12094....552
12095....539
12096....552
12097....557
12098....547
12099....547
12101....535
12102....535
12104....535
12105....535
12107....547
12108....547
12110....536
12111....536
12113....536
12114....536
12116....547
12117....547
12119....535
12120....535
12122....535
12123....535
12125....547
12126....547
12128....535
12129....535
12131....535
12132....535
12134....547
12136....547
12137....536
12139....536
12140....536
12142....536
12145....572
12146....572
12147....572
12162....549
12165....549
12167....763
12168....624
12170....618
12172....618
12174....618
12176....618
12178....618
12181....619
12182....618
12185....619
12186....618
12192....622
12194....623
12195....621
12197....621
12198....621
12200....621
12201....621
12203....621
12204....621
12211....620
12213....620
12215....620
12216....620
12217....620
12218....620
12221....620
12222....620
12223....621
12224....621
12227....621
12228....621
12229....620
12230....620
12231....621
12232....621
12233....621
12234....621
12237....620
12238....620
12239....620
12240....620
12241....620
12242....620
12243....620
12245....620
12246....620
12247....620
12248....620
12249....620
12250....620
12252....546
12254....548
12255....550
12256....550
12258....789
12259....789
12260....789
12261....789
12262....789
12269....789
12271....789
12279....790
12283....790
12286....790
12287....790
12290....789
12298....789
12300....811
12302....789
12303....789
12305....789
12306....789
12307....789
12314....806
12315....806
12316....806
12317....806
12319....804
12320....804
12321....804
12322....543
12326....543
12327....543
12328....810
12390....621
12392....621
12394....621
12396....621
12400....621
12402....621
12408....621
13001....224
13003....396
13004....396
13006....396
13018....376
13021....376
13022....372
13023....372
13024....372
13025....372
13027....377

Visit product pages for additional size, anodize and color options.

Part Number Index

13028....377
13029....377
13030....379
13031....377
13032....377
13033....379
13034....377
13035....377
13036....379
13037....377
13038....379
13039....377
13040....377
13041....379
13046....372
13047....372
13048....372
13049....372
13050....370
13051....370
13052....370
13053....370
13054....370
13055....370
13058....378
13059....380
13060....378
13061....380
13062....378
13063....380
13064....371
13065....371
13066....371
13082....377
13083....377
13084....377
13088....378
13089....380
13090....378
13091....380
13092....378
13093....380
13094....378
13095....380
13096....378
13098....378
13099....826
13106....384
13107....384
13108....384
13109....384
13110....382
13111....382
13112....382
13113....382
13115....382
13116....382
13117....382
13118....382
13119....382
13120....383
13121....383
13122....383
13123....383
13124....383
13125....383
13127....383
13129....383
13130....383
13132....383
13133....383
13134....403
13135....403
13136....403
13137....403
13138....403
13139....403
13140....403
13141....403
13142....403
13143....403
13144....403
13145....403
13146....403
13147....403
13148....403
13169....403
13170....403
13171....403
13172....403
13173....403
13174....403
13175....403
13176....403
13177....403
13178....403
13179....381
13180....381
13181....381
13182....381
13183....214
13184....213
13185....214
13186....213
13187....224
13188....224
13189....225
13190....225
13192....225
13193....222
13194....224
13195....224
13197....799
13198....800
13199....799
13200....800
14000....626
14001....627
14002....626
14003....627
14004....626
14005....627
14006....626
14007....627
14008....626
14009....627
14010....628
14011....338
14012....224
14013....224
14014....338
14016....338
14017....338
14018....338
14019....338
14021....653
14023....653
14025....653
14027....653
14028....653
14029....653
14030....653
14032....653
14035....654
14037....654
14039....654
14041....654
14043....654
14045....654
14047....654
14051....289
14052....289

Visit product pages for additional size, anodize and color options.

Part Number Index

14053....289
14054....289
14056....289
14057....298
14058....298
14059....288
14060....288
14061....288
14062....291
14065....291
14066....291
14067....291
14068....298
14070....298
14071....290
14073....290
14074....292
14075....292
14076....292
14077....292
14078....292
14079....292
14080....298
14081....298
14083....293
14085....293
14086....298
14088....298
14089....311
14092....293
14095....311
14098....299
14099....299
14100....299
14101....299
14102....299
14103....299
14104....312
14105....312
14107....795
14108....795
14110....795
14111....313
14112....320
14113....319
14114....319
14116....226
14117....337
14118....228
14120....287
14121....795
14122....373
14123....795
14124....373
14125....373
14126....373
14127....373
14128....373
14129....373
14130....373
14131....373
14132....226
14133....226
14135....333
14136....227
14137....227
14138....477
14139....477
14140....477
14142....477
14143....477
14148....477
14154....332
14155....819
14156....401
14157....588
14158....818
14159....373
14160....588
14161....381
14162....382
14164....382
14165....382
14166....382
14167....477
14170....332
14171....333
14172....332
14173....333
14174....332
14175....333
14176....332
14177....333
14185....477
14186....477
14188....477
14189....477
14190....477
14191....477
14192....476
14193....796
14196....397
33440....221
33450....221
33460....221
33470....221
33490....221
33530....221
11-2525....395
11-4065....400
11-4310....388
11-4312....388
11-4510....392
11-4512....392
11-4516....393
11-4710....390
11-4712....390
11-5065....400
11-5308....388
11-5310....388
11-5312....388
11-5314....388
11-5316....388
11-5510....393
11-5512....393
11-5516....393
11-5518....393
11-5520....393
11-5708....390
11-5710....390
11-5712....390
11-5714....390
11-5716....391
11-6039....399
11-6040....399
11-6041....399
11-6042....399
11-6065....400
11-6310....388
11-6312....388
11-6314....388
11-6316....388
11-6318....388
11-6320....388
11-6510....393
11-6512....393
11-6514....393
11-6516....393
11-6518....393
11-6520....393
11-6525....393
11-6530....393

Visit product pages for additional size, anodize and color options.

Part Number Index

11-6535....393
11-6540....393
11-6714....391
11-6716....391
11-6718....391
11-6720....391
11-8065....400
11-8312....388
11-8316....389
11-8318....389
11-8320....389
11-8325....389
11-8512....394
11-8516....394
11-8518....394
11-8520....394
11-8525....394
11-8530....394
11-8535....394
11-8540....394
11-8716....391
11-8720....391
13-1520....394
13-1525....394
13-1914....398
13-1922....398
13-1957....395
13-1993....395
13-2065....400
13-2247....398
13-3753....395
13-3758....401
13-3759....401
13-3940....388
13-3941....389
13-3942....389
13-3943....389
13-3944....389
13-3945....389
13-3946....389
13-3947....389
13-3948....389
13-3950....394
13-3951....394
13-3952....394
13-3953....394
13-3954....394
13-3955....394
13-3956....394
13-3957....394
13-3958....394
13-5065....400
13-5310....388
13-5312....388
13-5316....388
13-5320....388
13-5510....393
13-5512....393
13-5516....393
13-5518....393
13-5520....393
13-5525....393
13-5530....393
13-5712....390
13-6040....399
13-6041....399
13-6042....399
13-6043....399
13-6044....399
13-6045....399
13-6065....400
13-6310....388
13-6312....388
13-6316....388
13-6320....388
13-6325....388
13-6410....390
13-6412....390
13-6416....390
13-6508....393
13-6510....393
13-6512....393
13-6516....393
13-6520....393
13-6525....393
13-6530....393
13-6535....393
13-6540....393
13-6710....391
13-6712....391
13-6716....391
13-8065....400
13-8312....388
13-8316....389
13-8320....389
13-8325....389
13-8416....390
13-8425....390
13-8512....394
13-8516....394
13-8518....394
13-8520....394
13-8522....394
13-8525....394
13-8530....394
13-8535....394
13-8540....394
13-8550....394
13-8712....391
13-8716....391
13-8720....391
17-1065....400
17-5310....388
17-5312....388
17-5316....388
17-5510....393
17-5512....393
17-5516....393
17-5520....393
17-6041....399
17-6042....399
17-6065....400
17-6310....388
17-6312....388
17-6316....388
17-6320....388
17-6410....390
17-6412....390
17-6416....390
17-6510....393
17-6512....393
17-6516....393
17-6520....393
17-6712....391
17-8312....389
17-8316....389
17-8320....389
17-8325....389
17-8416....390
17-8425....390
17-8512....394
17-8516....394
17-8520....394
17-8525....394
17-8530....394
17-8535....394
17-8540....394
19-1065....400
19-2065....400
19-6041....399
19-6042....399
19-6065....400

Visit product pages for additional size, anodize and color options.

Part Number Index

19-6312 388
19-6316 388
19-6320 388
19-6325 388
19-6512 393
19-6516 393
19-6520 393
19-6525 393
19-8065 400
19-8312 389
19-8316 389
19-8320 389
19-8325 389
19-8512 394
19-8516 394
19-8520 394
19-8525 394
19-8530 394
19-8920 402
19-8925 402
19-8930 402
19-8935 402
19-8945 402
20-2020 ..... 70, 133
20-2040 ..... 70, 134
20-2490 490
20-2491 500
20-2492 498
20-2493 492
20-2494 501
20-2495 499
20-2496 484
20-2497 486
20-2565 232
20-2566 232
20-2567 232
20-2568 232
20-2570 232
20-2575 232
20-3681 218
20-3895 218
20-4040 ..... 70, 135
20-4080 283
20-4081 282
20-4107 235
20-4113 296
20-4117 237
20-4118 236
20-4119 285
20-4165 240
20-4166 239
20-4167 238
20-4176 294
20-7005 859
20-7020 859
20-7030 859
20-7042 865
20-7046 862
20-7047 862
20-7061 861
20-7063 861
20-7064 862
20-7065 868
20-7067 862
20-7069 863
20-7075 868
20-7080 871
20-7082 870
20-7085 868
20-7090 871
20-7092 870
20-7202 888
20-7211 890
20-7215 891
20-7231 889
20-7311 891
20-7504 888
20-7507 904
20-7509 904
20-7512 890
20-7593 902
20-7594 902
20-7597 889
20-8210 838
20-8211 838
20-8212 838
20-8213 838
20-8515 852
20-8516 852
25-1941 365
25-1951 365
25-1954 369
25-1956 374
25-1961 364
25-1962 366
25-1964 369
25-1966 374
25-2015 787
25-2025 787
25-2028 787
25-2059 510
25-2062 558
25-2064 525
25-2065 526
25-2066 527
25-2067 509
25-2071 542
25-2073 519
25-2074 521
25-2075 520
25-2076 522
25-2077 523
25-2078 524
25-2081 541
25-2086 545
25-2099 816
25-2112 794
25-2113 794
25-2114 794
25-2116 588
25-2118 588
25-2122 577
25-2128 639
25-2129 639
25-2131 641
25-2132 641
25-2137 639
25-2139 641
25-2142 643
25-2151 752
25-2152 752
25-2154 754
25-2157 760
25-2159 754
25-2177 588
25-2186 612
25-2192 616
25-2193 617
25-2205 614
25-2211 512
25-2221 513
25-2281 515
25-2341 753
25-2349 755
25-2361 639
25-2362 641
25-2380 649
25-2385 649
25-2387 649
25-2406 634
25-2414 651
25-2416 651

Visit product pages for additional size, anodize and color options.

Part Number Index

25-2418 631
25-2419 631
25-2427 474
25-2428 481
25-2439 760
25-2451 761
25-2489 482
25-2490 490
25-2491 500
25-2492 498
25-2493 492
25-2494 501
25-2495 499
25-2496 484
25-2497 486
25-2501 ..... 70, 137
25-2502 ..... 70, 138
25-2503 ..... 70, 139
25-2504 ..... 70, 140
25-2512 488
25-2514 ..... 71, 142
25-2521 494
25-2522 502
25-2523 496
25-2524 503
25-2525 ..... 70, 136
25-2527 ..... 70, 141
25-2550 ..... 71, 144
25-2565 232
25-2566 232
25-2567 232
25-2568 232
25-2570 232
25-2575 232
25-2576 ..... 71, 145
25-2750 517
25-2751 518
25-2752 517
25-2753 518
25-2761 571
25-2796 749
25-2798 750
25-2816 795
25-2817 795
25-2818 795
25-2819 795
25-2820 795
25-2821 795
25-2828 798
25-2830 532
25-2831 531
25-2835 533
25-2837 530
25-2838 529
25-2841 533
25-2843 824
25-2844 824
25-2850 825
25-2882 558
25-3085 385
25-3086 385
25-3094 215
25-3096 216
25-3183 219
25-3204 369
25-3206 369
25-3266 788
25-3272 787
25-3312 375
25-3313 375
25-3363 213
25-3369 217
25-3376 374
25-3382 364
25-3383 219
25-3391 214
25-3392 213
25-3396 214
25-3501 398
25-3502 399
25-3503 399
25-3625 397
25-3626 397
25-3681 218
25-3682 218
25-3766 788
25-3895 218
25-3896 213
25-4024 745
25-4025 715
25-4026 716
25-4027 717
25-4028 729
25-4029 730
25-4030 731
25-4031 732
25-4032 733
25-4033 734
25-4051 746
25-4053 747
25-4055 748
25-4080 283
25-4081 282
25-4107 235
25-4108 284
25-4111 306
25-4112 273
25-4113 296
25-4114 310
25-4115 297
25-4116 741
25-4117 237
25-4118 236
25-4119 285
25-4120 255
25-4124 743
25-4125 276
25-4128 261
25-4129 258
25-4132 327
25-4133 735
25-4134 329
25-4135 278
25-4136 328
25-4137 736
25-4138 330
25-4139 737
25-4140 271
25-4141 270
25-4148 739
25-4149 351
25-4150 253
25-4151 254
25-4152 257
25-4153 356
25-4154 356
25-4155 274
25-4156 357
25-4165 240
25-4166 239
25-4167 238
25-4168 723
25-4169 724
25-4170 280
25-4171 725
25-4172 718
25-4175 303
25-4176 294
25-4177 714
25-4178 722
25-4180 720
25-4181 712

Visit product pages for additional size, anodize and color options.

Part Number Index

25-4183 721
25-4184 713
25-4185 719
25-4186 347
25-4187 345
25-4188 346
25-4195 355
25-4196 352
25-4197 354
25-4198 354
25-4199 353
25-4250 295
25-4260 301
25-4265 286
25-4286 304
25-5010 ..... 71, 147
25-5013 ..... 71, 143
25-5050 ..... 71, 146
25-6115 913
25-6120 913
25-6121 913
25-6131 913
25-6136 913
25-6160 914
25-6415 663
25-6416 665
25-6423 671
25-6424 673
25-6425 667
25-6426 669
25-6490 698
25-6491 698
25-6700 703
25-6701 703
25-6702 704
25-6703 704
25-6705 701
25-6706 701
25-6710 511
25-6715 663
25-6716 665
25-6723 671
25-6724 673
25-6725 667
25-6726 669
25-6730 690
25-6731 690
25-6732 691
25-6733 691
25-6734 692
25-6735 692
25-6736 693
25-6737 693
25-6760 686
25-6762 687
25-6764 688
25-6766 689
25-6780 705
25-6792 702
25-6793 702
25-6797 700
25-6798 700
25-6850 706
25-6851 708
25-6852 709
25-7000 859
25-7003 859
25-7005 859
25-7006 862
25-7007 862
25-7008 862
25-7009 862
25-7012 859
25-7013 859
25-7036 862
25-7037 862
25-7038 862
25-7039 862
25-7042 865
25-7043 865
25-7046 862
25-7047 862
25-7051 863
25-7061 862
25-7062 879
25-7063 862
25-7064 862
25-7066 868
25-7067 862
25-7070 868
25-7071 868
25-7072 868
25-7073 868
25-7074 870
25-7079 870
25-7081 871
25-7083 870
25-7084 871
25-7086 871
25-7098 877
25-7101 877
25-7202 888
25-7206 885
25-7207 885
25-7211 890
25-7215 891
25-7217 893
25-7231 889
25-7232 889
25-7233 889
25-7256 866
25-7311 861
25-7401 ..... 694, 882
25-7422 895
25-7423 895
25-7502 890
25-7504 888
25-7507 904
25-7509 904
25-7515 893
25-7530 885
25-7531 885
25-7581 899
25-7582 899
25-7586 900
25-7589 901
25-7593 902
25-7594 902
25-7597 889
25-7598 889
25-7599 889
25-8210 838
25-8211 838
25-8212 838
25-8213 838
25-8217 838
25-8218 838
25-8222 838
25-8223 838
25-8307 830
25-8308 830
25-8310 830
25-8311 830
25-8327 830
25-8328 830
25-8330 830
25-8331 830
25-8335 830
25-8336 830
25-8337 830
25-8338 830
25-8360 830

Visit product pages for additional size, anodize and color options.

Part Number Index

25-8361 830
25-8370 830
25-8371 830
25-8445 843
25-8446 843
25-8515 852
25-8516 852
25-8520 848
25-8521 848
25-8525 849
25-8526 849
25-8527 849
25-8528 849
25-8547 842
25-8548 842
25-8550 844
25-8551 844
25-8567 846
25-8568 846
25-8580 850
25-8581 850
25-8584 851
25-8585 851
25-8610 853
25-8611 853
25-8620 840
25-8621 840
25-8625 840
25-8626 840
25-8901 369
30-1961 365
30-2431 492
30-2432 490
30-2433 486
30-2434 484
30-2435 501
30-2436 500
30-2437 499
30-2438 498
30-2565 232
30-2566 232
30-2567 232
30-2568 232
30-2569 232
30-2570 232
30-2575 232
30-3001 ..... 71, 149
30-3002 ..... 71, 150
30-3003 ..... 71, 151
30-3004 ..... 71, 152
30-3022 ..... 71, 153
30-3030 ..... 71, 148
30-3060 ..... 71, 154
30-3681 218
30-3789 364
30-3796 364
30-3891 218
30-4134 329
30-4302 285
30-4303 296
30-4305 237
30-4306 236
30-4307 235
30-4332 327
30-4335 278
30-4336 328
30-4338 330
30-4340 271
30-4351 254
30-4365 240
30-4366 239
30-4367 238
30-4376 294
30-4480 283
30-4481 282
30-6060 ..... 71, 155
30-7010 859
30-7020 859
30-7030 859
30-7034 880
30-7044 865
30-7045 862
30-7048 862
30-7055 862
30-7056 862
30-7058 878
30-7059 862
30-7060 862
30-7065 868
30-7075 868
30-7080 871
30-7082 870
30-7085 868
30-7090 871
30-7092 870
30-7203 888
30-7204 892
30-7208 885
30-7209 885
30-7214 890
30-7216 891
30-7234 889
30-7246 863
30-7257 866
30-7312 891
30-7314 896
30-7320 892
30-7503 890
30-7505 888
30-7508 904
30-7511 904
30-7512 904
30-7522 895
30-7523 895
30-7532 885
30-7533 885
30-7595 902
30-7596 902
30-7600 859
30-8220 838
30-8221 838
30-8230 838
30-8231 838
30-8515 852
30-8516 852
30-8630 840
30-8631 840
30-8635 840
30-8636 840
40-1961 364
40-1964 369
40-1966 374
40-1968 375
40-1981 365
40-1982 366
40-1984 369
40-1986 374
40-1988 375
40-2030 787
40-2033 788
40-2035 789
40-2037 789
40-2039 789
40-2043 789
40-2045 787
40-2050 787
40-2051 510
40-2052 568
40-2055 567
40-2060 558
40-2061 558
40-2063 567

Visit product pages for additional size, anodize and color options.

Part Number Index

40-2068 509
40-2079 559
40-2080 541
40-2085 545
40-2091 542
40-2093 519
40-2094 521
40-2095 520
40-2096 522
40-2097 523
40-2098 524
40-2100 816
40-2104 525
40-2105 526
40-2106 527
40-2109 794
40-2110 794
40-2111 794
40-2115 588
40-2117 588
40-2119 793
40-2120 587
40-2121 577
40-2130 639
40-2135 639
40-2138 639
40-2140 641
40-2141 643
40-2145 641
40-2146 643
40-2147 633
40-2148 636
40-2150 752
40-2153 752
40-2155 754
40-2156 760
40-2160 754
40-2165 644
40-2170 645
40-2175 645
40-2178 588
40-2180 647
40-2206 614
40-2210 512
40-2220 513
40-2280 516
40-2290 515
40-2340 753
40-2350 755
40-2365 639
40-2366 641
40-2367 643
40-2390 649
40-2400 649
40-2407 634
40-2408 634
40-2409 634
40-2410 649
40-2415 651
40-2417 651
40-2420 631
40-2421 480
40-2422 480
40-2423 480
40-2425 474
40-2426 631
40-2430 481
40-2431 492
40-2432 490
40-2433 486
40-2434 484
40-2435 501
40-2436 500
40-2437 499
40-2438 498
40-2440 760
40-2441 760
40-2450 761
40-2488 482
40-2515 488
40-2517 494
40-2518 502
40-2519 496
40-2520 503
40-2525 233
40-2530 233
40-2535 233
40-2540 233
40-2545 233
40-2550 233
40-2555 233
40-2560 233
40-2561 233
40-2562 233
40-2563 233
40-2564 233
40-2578 233
40-2579 233
40-2580 233
40-2581 233
40-2700 605
40-2701 606
40-2704 605
40-2705 606
40-2708 605
40-2709 606
40-2712 605
40-2713 606
40-2715 609
40-2716 609
40-2717 609
40-2731 610
40-2754 517
40-2755 518
40-2756 518
40-2757 517
40-2758 518
40-2759 518
40-2760 571
40-2765 571
40-2797 749
40-2799 750
40-2822 795
40-2823 795
40-2824 795
40-2825 795
40-2826 795
40-2827 795
40-2832 532
40-2833 531
40-2836 533
40-2839 530
40-2840 529
40-2842 533
40-2845 824
40-2846 824
40-2849 825
40-2876 797
40-2877 797
40-2880 558
40-2881 558
40-2884 561
40-2885 561
40-2886 561
40-2887 561
40-3087 385
40-3088 385
40-3100 215
40-3102 216
40-3116 402
40-3120 402
40-3126 402

Visit product pages for additional size, anodize and color options.

Part Number Index

40-3134 402
40-3189 219
40-3202 369
40-3203 369
40-3267 788
40-3273 573
40-3274 787
40-3278 365
40-3282 374
40-3283 374
40-3286 364
40-3290 402
40-3310 375
40-3311 375
40-3346 386
40-3348 386
40-3354 214
40-3359 213
40-3361 214
40-3362 213
40-3368 223
40-3370 217
40-3389 219
40-3500 398
40-3503 399
40-3628 397
40-3629 397
40-3650 391
40-3679 218
40-3680 218
40-3767 788
40-3891 218
40-3897 213
40-3913 376
40-3914 376
40-3915 376
40-4001 ..... 72, 159
40-4002 ..... 72, 160
40-4003 ..... 72, 161
40-4004 ..... 72, 162
40-4012 ..... 73, 177
40-4020 ..... 72, 168
40-4030-Lite 72, 163
40-4040 ..... 72, 158
40-4040-Lite 72, 157
40-4040-UL 72, 156
40-4045-Lite 72, 167
40-4080 ..... 72, 172
40-4080-Lite 72, 171
40-4080-UL 72, 170
40-4082-Lite 72, 173
40-4083-Lite 73, 174
40-4084-Lite 73, 175
40-4085-Lite 73, 176
40-4093 ..... 72, 164
40-4094 ..... 72, 165
40-4096 ..... 72, 166
40-4280 295
40-4285 304
40-4290 301
40-4295 286
40-4301 297
40-4302 285
40-4303 296
40-4304 310
40-4305 237
40-4306 236
40-4307 235
40-4308 308
40-4309 307
40-4311 306
40-4312 273
40-4316 262
40-4317 741
40-4318 743
40-4320 255
40-4321 723
40-4322 724
40-4323 725
40-4325 276
40-4328 261
40-4329 258
40-4330 265
40-4331 264
40-4332 327
40-4333 735
40-4334 329
40-4335 278
40-4336 328
40-4337 736
40-4338 330
40-4339 737
40-4340 271
40-4341 270
40-4343 718
40-4345 267
40-4346 266
40-4348 739
40-4349 351
40-4350 253
40-4351 254
40-4352 257
40-4353 356
40-4354 356
40-4355 274
40-4356 357
40-4361 268
40-4362 269
40-4365 240
40-4366 239
40-4367 238
40-4370 280
40-4372 340
40-4375 303
40-4376 294
40-4377 714
40-4379 722
40-4380 720
40-4381 712
40-4383 721
40-4384 713
40-4385 719
40-4386 347
40-4387 345
40-4388 346
40-4390 341
40-4394 344
40-4395 355
40-4396 352
40-4397 354
40-4398 354
40-4399 353
40-4424 745
40-4425 715
40-4426 716
40-4427 717
40-4428 729
40-4429 730
40-4430 731
40-4431 732
40-4432 733
40-4433 734
40-4441 335
40-4443 334
40-4451 746
40-4453 747
40-4455 748
40-4480 283
40-4481 282
40-4488 554
40-4489 553
40-6060 914

Visit product pages for additional size, anodize and color options.

Part Number Index

40-6070 913
40-6075 913
40-6076 913
40-6130 913
40-6135 913
40-6515 663
40-6516 665
40-6523 671
40-6524 673
40-6525 667
40-6526 669
40-6530 675
40-6531 677
40-6533 683
40-6534 685
40-6535 679
40-6536 681
40-6590 698
40-6591 698
40-6595 699
40-6596 699
40-6800 706
40-6801 707
40-6802 710
40-6803 708
40-6804 709
40-6805 706
40-6806 706
40-6807 706
40-6808 511
40-6810 703
40-6811 703
40-6812 704
40-6813 704
40-6814 701
40-6815 663
40-6816 665
40-6817 701
40-6823 671
40-6824 673
40-6825 667
40-6826 669
40-6830 675
40-6831 677
40-6833 683
40-6834 685
40-6835 679
40-6836 681
40-6860 686
40-6862 687
40-6864 688
40-6866 689
40-6870 690
40-6871 690
40-6873 691
40-6874 691
40-6876 692
40-6877 692
40-6879 693
40-6881 705
40-6883 693
40-6892 702
40-6893 702
40-6897 700
40-6898 700
40-7010 859
40-7014 862
40-7015 862
40-7016 862
40-7017 862
40-7020 859
40-7021 859
40-7023 859
40-7024 862
40-7025 862
40-7026 862
40-7028 862
40-7029 862
40-7030 859
40-7031 862
40-7032 862
40-7033 862
40-7044 865
40-7045 862
40-7048 862
40-7049 865
40-7050 863
40-7053 862
40-7054 862
40-7055 862
40-7056 862
40-7058 878
40-7059 862
40-7060 862
40-7065 868
40-7068 879
40-7075 868
40-7076 868
40-7080 871
40-7082 870
40-7085 868
40-7087 868
40-7090 871
40-7092 870
40-7093 871
40-7094 870
40-7099 877
40-7102 877
40-7110 876
40-7115 865
40-7116 865
40-7203 888
40-7204 892
40-7208 885
40-7209 885
40-7214 890
40-7216 891
40-7218 893
40-7234 889
40-7235 889
40-7236 889
40-7257 866
40-7312 891
40-7320 892
40-7400 ..... 694, 882
40-7503 890
40-7505 888
40-7508 904
40-7511 904
40-7512 904
40-7516 893
40-7522 895
40-7523 895
40-7532 885
40-7533 885
40-7580 899
40-7583 899
40-7584 900
40-7585 900
40-7588 901
40-7595 902
40-7596 902
40-7600 889
40-7601 889
40-7602 889
40-8016 ..... 73, 179
40-8020 ..... 72, 169
40-8080 ..... 73, 178
40-8220 838
40-8221 838
40-8230 838
40-8231 838

Visit product pages for additional size, anodize and color options.

Part Number Index

40-8235 838
40-8236 838
40-8320 830
40-8321 830
40-8322 830
40-8323 830
40-8325 830
40-8326 830
40-8340 830
40-8341 830
40-8345 830
40-8346 830
40-8375 830
40-8376 830
40-8385 830
40-8386 830
40-8390 830
40-8391 830
40-8448 843
40-8449 843
40-8510 852
40-8511 852
40-8512 853
40-8513 853
40-8530 848
40-8531 848
40-8535 849
40-8536 849
40-8540 849
40-8541 849
40-8545 842
40-8546 842
40-8555 844
40-8556 844
40-8565 846
40-8566 846
40-8582 850
40-8583 850
40-8586 851
40-8587 851
40-8630 840
40-8631 840
40-8635 840
40-8636 840
40-8900 369
45-2053 574
45-2107 575
45-2431 492
45-2432 490
45-2433 486
45-2434 484
45-2435 501
45-2436 500
45-2437 499
45-2438 498
45-2525 234
45-2530 234
45-2535 234
45-2540 234
45-2545 234
45-2550 234
45-2555 234
45-2560 234
45-2561 234
45-2562 234
45-2563 234
45-2564 234
45-4301 297
45-4302 285
45-4303 296
45-4304 310
45-4305 237
45-4306 236
45-4307 235
45-4332 327
45-4334 329
45-4335 278
45-4336 328
45-4338 330
45-4340 271
45-4351 254
45-4355 274
45-4365 240
45-4366 239
45-4367 238
45-4376 294
45-4480 283
45-4481 282
45-4545 ..... 73, 181
45-4545-Lite 73, 180
45-4590 ..... 73, 182
45-6525 679
45-6526 681
45-6598 699
45-6800 706
45-6880 705
45-7010 859
45-7020 859
45-7024 862
45-7030 859
45-7032 862
45-7034 880
45-7035 862
45-7036 862
45-7037 880
45-7053 862
45-7054 862
45-7058 878
45-7065 868
45-7075 868
45-7080 871
45-7082 870
45-7090 871
45-7092 870
45-7110 876
45-7204 892
45-7233 889
45-7237 889
45-7239 889
45-7248 863
45-7317 896
45-7320 892
45-7323 896
45-7506 888
45-7508 904
45-7511 904
45-7512 904
45-7522 895
45-7523 895
45-7534 885
45-7535 885
45-7595 902
45-7596 902
45-7603 889
45-7604 889
45-7605 889
45-8220 838
45-8221 838
45-8230 838
45-8231 838
45-8235 838
45-8236 838
45-8320 830
45-8321 830
45-8340 830
45-8341 830
45-8510 852
45-8511 852
45-8536 849
45-8537 849
45-8630 840
45-8631 840

Visit product pages for additional size, anodize and color options.

Part Number Index

45-8635 840
45-8636 840
45-9090 ..... 73, 183
65-2053 574
65-2054 473
65-2056 564
65-2057 585
65-2058 564
65-2069 576
65-2070 563
65-2082 569
65-2083 569
65-2084 545
65-2087 570
65-2088 576
65-2089 570
65-2090 579
65-2101 525
65-2102 526
65-2103 527
65-2107 575
65-2108 817
65-2123 578
65-2125 576
65-2126 573
65-2178 613
65-2179 613
65-2181 613
65-2182 613
65-2183 613
65-2184 613
65-2187 612
65-2188 612
65-2189 612
65-2190 616
65-2191 617
65-2195 617
65-2200 616
65-2201 617
65-2202 616
65-2207 615
65-2208 615
65-2209 615
65-2212 616
65-2213 616
65-2215 615
65-2230-BLU 812
65-2230-RED 812
65-2230-YEL 812
65-2240-BLU 812
65-2240-RED 812
65-2240-YEL 812
65-2250-BLU 812
65-2250-RED 812
65-2250-YEL 812
65-2264 813
65-2265 813
65-2270-BLU 812
65-2270-RED 812
65-2270-YEL 812
65-2272-BLU 812
65-2272-RED 812
65-2272-YEL 812
65-2282 515
65-2312 601
65-2314 601
65-2316 601
65-2317 599
65-2318 599
65-2321 600
65-2323 600
65-2333 603
65-2334 603
65-2335 604
65-2336 604
65-2337 602
65-2338 602
65-2340 597
65-2341 597
65-2342 597
65-2343 597
65-2344 597
65-2345 597
65-2346 597
65-2424 586
65-2429 586
65-2452 466
65-2453 466
65-2454 466
65-2455 466
65-2456 466
65-2457 466
65-2460 470
65-2461 470
65-2462 470
65-2463 470
65-2464 470
65-2465 590
65-2467 470
65-2468 470
65-2470 470
65-2471 470
65-2472 471
65-2473 471
65-2474 471
65-2475 471
65-2476 471
65-2477 471
65-2478 471
65-2479 470
65-2480 469
65-2481 469
65-2482 469
65-2483 467
65-2484 467
65-2485 467
65-2500 807
65-2501 807
65-2502 807
65-2503 807
65-2504 807
65-2505 807
65-2506 808
65-2507 808
65-2508 808
65-2509 808
65-2510 808
65-2511 808
65-2601 452
65-2602 452
65-2603 452
65-2604 452
65-2605 452
65-2606 452
65-2607 452
65-2608 452
65-2609 455
65-2610 455
65-2611 455
65-2612 455
65-2613-S 457
65-2613-T 457
65-2614-S 457
65-2614-T 457
65-2615 459
65-2616 459
65-2617 459
65-2618 459
65-2619 459
65-2620 459
65-2621 459
65-2622 459

Visit product pages for additional size, anodize and color options.

Part Number Index

65-2623 459
65-2624 459
65-2629 455
65-2630 455
65-2631 459
65-2632 459
65-2633 461
65-2634 461
65-2635 461
65-2636 461
65-2637 461
65-2640 462
65-2641 453
65-2642 453
65-2643 455
65-2644 455
65-2645 455
65-2646 456
65-2647 456
65-2648 454
65-2649 454
65-2650 460
65-2651 463
65-2652 463
65-2653 463
65-2654 463
65-2655 463
65-2656 463
65-2657 463
65-2658 463
65-2659 464
65-2660-S 458
65-2660-T 458
65-2661-S 458
65-2661-T 458
65-2662-S 458
65-2662-T 458
65-2663-S 458
65-2663-T 458
65-2664 464
65-2666 463
65-2667 463
65-2668 463
65-2669 463
65-2714 609
65-2730 566
65-2745 580
65-2763 571
65-2780 565
65-2781 565
65-2782 565
65-2800 468
65-2802 468
65-2804 468
65-2806 468
65-2808 465
65-2810 483
65-2812 463
65-2813 463
65-2814 465
65-2815 465
65-2851 823
65-2852 823
65-2899 801
65-2901 625
65-2902 625
65-2903 625
65-2904 625
65-2905 625
65-2906 625
65-2907 625
65-2908 625
65-2922 569
65-2923 569
65-2927 570
65-2929 570
65-2932 569
65-2933 569
65-2937 570
65-2939 570
65-2952 569
65-2953 569
65-2957 570
65-2959 570
65-3058 391
65-3059 387
65-3061 387
65-3062 391
65-3063 387
65-3064 392
65-3065 387
65-3067 391
65-3071 392
65-3104 387
65-3106 392
65-3110 392
65-3111 387
65-3112 392
65-3114 387
65-3118 387
65-3122 392
65-3123 392
65-3208 400
65-3214 400
65-3258 399
65-3260 399
65-4486 581
65-4487 582
65-4490 504
65-4491 504
65-4503 322
65-4504 323
65-4505 245
65-4506 244
65-4509 321
65-4510 241
65-4512 325
65-4513 326
65-6068 912
65-6071 912
65-6086 908
65-6088 908
65-6091 909
65-6092 909
65-6096 909
65-6097 909
65-6098 909
65-6099 909
65-6102 910
65-6103 910
65-6104 910
65-6106 908
65-6107 911
65-6108 911
65-6109 911
65-7095 884
65-7100 884
65-7150 884
65-7151 884
65-7152 905
65-7153 884
65-7155 884
65-7156 905
65-7157 906
65-7158 905
65-7159 905
65-7162 903
65-7163 903
65-7164 903
65-7166 906
65-7167 884
65-7168 884

Visit product pages for additional size, anodize and color options.

Part Number Index

65-7169 884
65-7170 884
65-7171 903
65-7172 903
65-7173 903
65-7174 906
65-7175 905
65-7176 887
65-7177 905
65-7178 905
65-7179 887
65-7180 905
65-7181 906
65-7182 903
65-7183 903
65-7184 903
65-7185 906
65-7186 905
65-7187 887
65-7188 905
65-7189 905
65-7190 903
65-7191 903
65-7192 903
65-7193 906
65-7194 905
65-7195 887
65-7196 905
65-7197 905
65-7198 905
65-7199 906
65-7200 905
65-7201 906
65-7212 860
65-7221 886
65-7222 886
65-7224 860
65-7240 872
65-7241 873
65-7243 873
65-7244 872
65-7245 873
65-7246 872
65-7247 873
65-7248 872
65-7305 874
65-7313 897
65-7315 875
65-7500 886
65-7501 886
65-7510 897
65-7513 906
65-7514 906
65-7520 898
65-7521 898
65-7540 886
65-7541 886
65-7542 886
65-7543 896
65-7587 900
65-8415 839
65-8416 839
65-8570 855
65-8575 855
75-3400 418
75-3401 418
75-3404 413
75-3405 413
75-3406 413
75-3407 413
75-3408 413
75-3409 413
75-3410 413
75-3411 414
75-3412 414
75-3413 414
75-3414 415
75-3415 415
75-3416 415
75-3417 415
75-3418 415
75-3419 414
75-3420 414
75-3421 415
75-3422 415
75-3423 416
75-3425 415
75-3426 416
75-3427 416
75-3428 417
75-3429 417
75-3430 417
75-3431 417
75-3432 417
75-3433 417
75-3434 417
75-3435 413
75-3436 413
75-3437 413
75-3438 413
75-3439 413
75-3440 413
75-3441 413
75-3442 414
75-3443 414
75-3444 414
75-3445 415
75-3446 415
75-3447 415
75-3448 415
75-3449 415
75-3450 414
75-3451 414
75-3452 415
75-3453 415
75-3454 415
75-3455 416
75-3456 415
75-3457 416
75-3458 416
75-3459 417
75-3460 417
75-3461 417
75-3462 417
75-3463 417
75-3464 417
75-3465 417
75-3466 413
75-3467 413
75-3468 413
75-3469 414
75-3470 414
75-3471 415
75-3472 415
75-3473 416
75-3475 417
75-3476 417
75-3477 413
75-3478 416
75-3479 417
75-3480 413
75-3481 418
75-3482 413
75-3483 418
75-3500 416
75-3501 416
75-3502 416
75-3503 416
75-3504 416
75-3505 414
75-3506 416
75-3507 414
75-3508 416
75-3509 413
75-3510 413
75-3511 413

Visit product pages for additional size, anodize and color options.

Part Number Index

75-3512 415
75-3513 415
75-3514 415
75-3515 413
75-3516 413
75-3517 413
75-3518 413
75-3519 413
75-3520 414
75-3521 414
75-3522 414
75-3523 415
75-3524 415
75-3525 415
75-3526 415
75-3527 416
75-3528 415
75-3529 416
75-3530 417
75-3531 417
75-3533 417
75-3534 417
75-3535 417
75-3536 417
75-3537 418
75-3538 418
75-3539 418
75-3540 418
75-3541 414
75-3552 418
75-3556 418
75-3558 418
75-3562 418
75-3563 418
75-3571 418
75-3572 418
75-3573 418
75-3574 418
75-3575 418
75-3576 418
75-3578 418
75-3581 418
75-3583 418
75-3584 414
75-3585 414
75-3587 414
75-3588 414
75-3589 414
75-3590 414
75-3591 414
75-3592 414
75-3593 414
75-3594 414
75-3595 414
75-3596 414
75-3597 415
75-3598 414
75-3599 413
75-3600 413
75-3601 413
75-3602 413
75-3603 413
75-3605 413
75-3615 415
75-3616 414
75-3617 416
75-3618 416
75-3619 415
75-3620 417
75-3621 417
75-3622 413
75-3623 417
75-3624 417
75-3625 417
75-3626 417
75-3627 417
75-3628 414
75-3629 416
75-3630 417
75-3632 405
75-3633 405
75-3634 417
75-3635 405
75-3636 405
75-3637 405
75-3638 405
75-3639 414
75-3640 413
75-3641 413
75-3642 413
75-3643 413
75-3644 414
75-3645 414
75-3647 414
75-3648 416
75-3649 415
75-3650 415
75-3651 415
75-3652 416
75-3653 416
75-3654 414
75-3655 414
75-3656 418
75-3800 407
75-3801 407
75-3802 407
75-3803 407
75-3804 407
75-3805 407
75-3806 407
75-3807 407
75-3808 407
75-3809 407
75-3810 407
75-3811 407
75-3812 408
75-3813 408
75-3814 409
75-3815 409
75-3816 409
75-3817 409
75-3818 409
75-3819 409
75-3820 408
75-3821 408
75-3822 409
75-3823 409
75-3824 409
75-3825 409
75-3826 409
75-3827 409
75-3828 410
75-3829 409
75-3830 410
75-3831 410
75-3832 409
75-3833 409
75-3834 410
75-3835 409
75-3836 410
75-3837 410
75-3838 411
75-3839 411
75-3840 411
75-3841 411
75-3842 411
75-3843 411
75-3844 412
75-3845 412
75-3846 411
75-3847 411
75-3848 411
75-3849 411
75-3850 412
75-3851 412

Visit product pages for additional size, anodize and color options.

Product Type Index

INTRODUCTION, 2-48
- ***What is 80/20, 2-5***
- ***Made with 80/20 Stuff, 6-27***
- ***Peace of Mind, 28-35***
- Business Model, 29
- One-Stop-Shop, 30
- 80/20 Difference, 31
- Ongoing Support, 31
- Customer Support, 32
- Local Distributor Network, 32
- Design Assistance, 33
- Free Design Tools, 34-35
- ***80/20 Services, 36-44***
- 80/20 Builds, 36-37
- Custom Machining, 38-39
- Panel Shop, 40-41
- Metal Finishing, 42
- Standard Machining, 43
- Custom Packaging, 44
- ***Ordering Information, 45-47***
- Shipping Schedule, 45-46
- Preferred Carriers, 46
- Damaged or Lost Shipments, 46
- Return Policy, 46
- Warranty, 47

PROFILES, 49-198
- Profile Education, 54-66
- Profile Quick Reference, 67-74
- T-slot Profiles, 76-183
  - ***Fractional Profiles, 76-132***
  - 10-Series T-slot Profiles, 76-97
  - 15-Series T-slot Profiles, 98-132
  - ***Metric, 133-183***
  - 20-Series T-slot Profiles, 133-135
  - 25-Series T-slot Profiles, 136-147
  - 30-Series T-slot Profiles, 148-155
  - 40-Series T-slot Profiles, 156-179
  - 45-Series T-slot Profiles, 180-183
- Ready Tube®, 184-190
  - Square RT Profiles, 184-185
  - Single Flange RT Profiles, 186-187
  - Double Flange RT Profiles, 188-190
- Quick Frame®, 191-197
  - Square QF Profiles, 191
  - Single Flange QF Profiles, 192-194
  - Double Flange QF Profiles, 195-197

FASTENING METHODS, 199-442
- Fastening Methods Education, 206-212
- Internal Fasteners, 213-226
  - ***Anchor Fasteners, 213-216***
  - Standard Anchor Fastener Assemblies, 213
  - Standard Anchor Fastener Cam Only, 214
  - Short Double Anchor Fastener Assemblies, 215
  - Long Double Anchor Fastener Assemblies, 216
  - ***Butt Fasteners, 217***
  - ***End Fasteners, 218-220***
  - Standard End Fasteners, 218
  - Single Tab End Fasteners, 219
  - Double End Fasteners, 220
  - ***Inside Corner Connectors, 221-223***
  - Hidden Corner Connectors, 221
  - Miter Connectors, 222
  - 90° Inside Corner Connectors, 223
  - ***Bolt Connectors, 224-225***
  - Central Connectors and Cover Cap, 224
  - Bolt Connectors, 225
  - ***Milling Connectors, 226***
- External Fasteners, 227-335
  - Plate Connectors, 227
  - ***45 Degree Supports, 228-234***
  - 45 Degree Support Connector, 228
  - 45 Degree Support Assemblies, 229-234
  - ***Straight Plates, 235-237***
  - 2 Hole - Straight Flat Plates, 235

Product Type Index

3 Hole - Straight Flat Plates, 236
4 Hole - Straight Flat Plates, 237
Square Plates, 238
4 Hole - Square Flat Plates, 238
Rectangular Plates, 239-240
6 Hole - Rectangular Flat Plates, 239
8 Hole - Rectangular Flat Plates, 240
Transition Plates, 241-252
2 Hole - Transition Flat Plates, 241-243
3 Hole - Transition Flat Plates, 244-245
4 Hole - Transition Flat Plates, 246-249
6 Hole - Transition Flat Plates, 250-251
8 Hole - Transition Flat Plates, 252
Angled Plates, 253-269
90° Angled Flat Plates, 253-261
15° Angled Flat Plates, 262-263
30° Angled Flat Plates, 264-265
45° Angled Flat Plates, 266-267
60° Angled Flat Plates, 268-269
Tee Plates, 270-277
4 Hole - Tee Flat Plates, 270
5 Hole - Tee Flat Plates, 271
6 Hole - Tee Flat Plates, 272
7 Hole - Tee Flat Plates, 273
8 Hole - Tee Flat Plates, 274
11 Hole - Tee Flat Plates, 275
12 Hole - Tee Flat Plates, 276
16 Hole - Tee Flat Plates, 277
Cross Plates, 278-281
7 Hole - Cross Flat Plates, 278
12 Hole - Cross Flat Plates, 279
16 Hole - Cross Flat Plates, 280
20 Hole - Cross Flat Plates, 281
Right Angle Plates, 282-283
5 Hole - "L" Flat Plates, 282
5 Hole - "T" Flat Plates, 283
Corner Brackets, 284-320
2 Hole - Corner Brackets, 284-293
2 Hole - Corner Bracket Cover Caps, 288-293
3 Hole - Corner Brackets, 294-295
4 Hole - Corner Brackets, 296-301
4 Hole - Corner Bracket Cover Caps, 299
6 Hole - Corner Brackets, 302-309
8 Hole - Corner Brackets, 310-313
8 Hole - Corner Bracket Cover Caps, 311-313
9 Hole - Corner Brackets, 314
10 Hole - Corner Brackets, 315
12 Hole - Corner Brackets, 316-317
18 Hole - Corner Brackets, 318
3 Way - Corner Brackets, 319-320
Transition Corner Brackets, 321-326
2 Hole - Transition Corner Brackets, 321-322
4 Hole - Transition Corner Brackets, 323-325
8 Hole - Transition Corner Brackets, 326
Corner Gussets, 327-330
2 Hole - Gusseted Inside Corner Brackets, 327
4 Hole - Gusseted Inside Corner Brackets, 328-329
8 Hole - Gusseted Inside Corner Brackets, 330
Corner Connectors, 331-335
3 Way - Corner Connectors, 331, 333-335
2 Way - Corner Connectors, 332
Variable Angle Connectors, 336-363
Clamp Blocks, 336-337
Standard Angle Clamp Blocks, 336
Economy Angle Clamp Block, 337
2 Hole - Pivot Joints, 338-339
Pivot Plates, 340-344
3 Hole - Pivot Plates, 340-342
5 Hole - Pivot Plates, 343-344
Structural Pivots, 345-363
Structural Pivot Nubs, 345-347
Structural Right Angle Pivot Nubs, 348-350
Structural Pivot Arms, 351-353
Structural Pivot Assemblies, 354-363
Hardware, 364-406
T-Nuts, 364-386

Product Type Index

Slide-In T-Nuts, 364-373, 384-385
T-Nut Holding Springs, 367
Roll-In T-Nuts, 374-380
Drop-In T-Nuts, 381-383
Nylon T-slot Nuts, 386
Bolts, 387-398
Button Head Socket Cap Screws (BHSCS), 387-389
Flanged Button Head Socket Cap Screws (FBHSCS), 389-390
Flat Head Socket Cap Screws (FHSCS), 390-391
Socket Head Cap Screws (SHCS), 391-394
Low Head Socket Cap Screws (LHSCS), 395
Flanged Hex Head Bolts (FHHB), 395
Connecting Screws (CS), 396
Self Tapping Screws (STS), 396
Self Drilling Screws (SDS), 396
Threaded Insert, 397
Bearing Pad Screws, 397
Shoulder Bolts, 398
Shoulder Bolt Assemblies, 398
Washers, 399
Hex Nuts, 400-401
T-Slot Studs, 402-406
Bolt Assemblies, 407-418
Ready Tube® Connectors, 419-424
Quick Frame® Connectors, 425-442

PANELS & DOOR COMPONENTS, 443-592
Panels & Doors Education, 447-451
Panel Types, 452-471
Plastic Panels, 452-465
Acrylic Panels, 452
Polycarbonate Panels, 453-456, 462
ABS Haircell Panels, 457
PVC/Acrylic Panels, 458
Expanded PVC Panels, 459
Aluminum Composite Panels, 460
Lite Aluminum Composite Panels, 461
HDPE Panels, 463
HDPE Pegboard, 464
Phenolic Resin Panels, 465
Aluminum Plates, 466-467
Solid Aluminum Plates, 466
Diamond Tread Plate, 467
Laminated Tabletops, 468
Mesh Panels, 469-471
Expanded Metal Panels, 469
Wire Mesh Panels, 470-471
Panel Mounts, 473-508
Blocks & Clamps, 473-480
Detent Hinge Stoppers, 473
Panel Mount Blocks, 474-478
Lite Panel Mount Block Spacers, 479
Quick Change Panel Clamps, 480
Brackets, 481-483
Panel Mount Brackets, 481-482
Tabletop Fastening Kits, 483
Retainers, 484-510
Single Arm Panel Retainers, 484-487
Double Panel Retainers, 488-489
Single Arm Mesh Retainers, 490-493
Double Arm Mesh Retainers, 494-497
Backing Plates, 498-499
Single Arm Mesh Retainer Assemblies, 500-501
Double Arm Mesh Retainer Assemblies, 502-503
Panel Holders, 504
Snap On Panel Retainers, 505
Mesh Retainers, 506-507
Wire Mesh Fasteners, 508
Door Mounts, 509-557
Sliding, 509-513
Sliding Door Glides, 509-511
Door Slide Tracks, 512-513
Rolling, 514-518
Roller Wheels, 514-516
Roller Wheel Brackets, 517
Roller Wheel Assemblies, 518

Product Type Index

Swinging, 519-557
Standard Lift-Off Hinges, 519-524
Lift-Off Hinge Assemblies, 525-527
Bi-fold Door Configurations, 528
Economy Lift-Off Hinges, 529-532
Economy Lift-Off Hinge Assemblies, 533
Concealed Hinges, 534
Plastic Lift-Off Hinges, 535-538
Dual Hand Lift-Off Hinges, 539
Adjustable Hinges, 540-541
Detent Hinges, 542-543
Constant Friction Hinges, 544
4 Hole - Aluminum Hinges, 545
Standard Plastic Hinges, 546-549
4 Hole - Zinc Hinges, 550, 553-556
Transition Hinges, 551
Standard Stainless Steel Hinges, 552
Lite Panel Hinges, 557
Door Accessories, 558-592
Handles, 558-571
Plastic Handles, 558-560, 564
Aluminum Handles, 561-562, 565
Steel Handles, 563
Locking Plastic Panel Grabber™ Handles, 566
Deluxe Door Handle and Mating Handles, 567-568
Furniture Style Handles, 569-570
Furniture Style Handle Pawl Kits, 571
Latches, 572-584
Slam Latches, 572
Velcro® Latches and Fasteners, 573
Deadbolt Latches, 574-575
Grabber™ Door Catches, 576
Grabber™ Door Mounting Plates, 577-578
Magnetic Door Catches and Brackets, 579-581
Ball Catches, 582-583
Tension Ball Latches, 584
Sliding Door Locks, 585
Gaskets & Edging, 586-590
Panel Stiffeners, 586
Panel Gaskets, 587-588
Rubber Door Seals, 589
Wire Edge Covers, 590
Door Stops, 591-592

FLOOR TO FRAME COMPONENTS, 593-654
Floor to Frame Education, 595-596
Casters, 597-609
Swivel Casters, 597, 599-600, 603, 605, 607
Furniture Style Casters, 598
Rigid Casters, 601, 604, 606, 608
Triangular Top Plate Casters, 602
Leveling Casters, 609
Floor Locks, Glides, and Leveling Feet, 610-617
Adjustable Position Floor Locks, 610
Floor Glides, 611-613
Standard, 611
Economy, 612
Large Base Glides, 613
Leveling Feet, 614-617
Mighty Mounts, 614
Anti-Vibration Mounts, 615
Deluxe and Economy Leveling Feet, 616-617
Bases, Anchors & Threaded Stems, 618-625
Swivel Foot Bases, 618-619, 622-623
Swivel Foot Threaded Stems, 620-621
Trapezoid Base Anchor, 624
Wedge Floor Anchors, 625
Floor & End Brackets, 626-630
Die-Cast Floor Brackets, 626-627
Steel Floor Brackets, 628
Aluminum Floor Brackets, 629
Threaded End Brackets, 630
Base Plates, 631-654
Caster Base Plates, 631-635
Position Floor Lock Base Plates, 636-637
Tapped Base Plates, 638-643

Product Type Index

Leveling Anchoring Base Plates, 644-647
Floor Mount Base Plates, 648-652
Die-Cast Tapped Base Plates, 653-654

ADD-ON COMPONENTS, 655-782
Linear Motion Education, 660-661
Dynamic Pivots Education, 711
Pressure Manifolds Education, 751
Stanchions Education, 767
Linear Motion, 662-710
Bearings, 662-693
Standard Linear Bearings, 662-673
High-Cycle Linear Bearings, 674-685
UniBearings, 686-689
UniBearing Assemblies, 690-693
Linear Bearing Brake Hole Specifications, 694
UHMW-PE Engineering Specifications, 695-697
Bearing Pads, 698-704
Linear Bearing Pads, 698-699
T-Slot Insert Bearing Pads, 700
UniBearing™ Pads, 701-702
Bearing Pad Profiles, 703-704
Shims & Brakes, 705-710
Shims, 705
Linear Motion Brakes, 706-710
Dynamic Pivots, 712-750
Dynamic Pivot Nubs, 712-717
Dynamic Pivot Arms, 718-719
Dynamic Pivot Assemblies, 720-734, 737-744, 746-748
Bracket Plates, 735-736, 745
Dynamic Pivot Handle Kits, 749-750
Manifolds, Rollers & Stoppers, 752-766
Plates, Gaskets & O-rings, 752-761
3-Hole Feed Plates and Gasket, 752
2-Hole Stopper Plates, 753
5-Hole Feed Plates and Gasket, 754, 756
4-Hole Stopper Plates, 755
3-Hole Stopper Plates, 757
12-Hole Feed Plates and Gasket, 758
8-Hole Stopper Plates, 759
Access Plates, 760-761
O-rings, 760
Rollers, Rods & Stoppers, 762-766
Gravity Rollers & Blocks, 762-763
Connector Rods, 764
P-Tube Stoppers, 765
Building with Gravity Rollers, 766
Stanchions, 768-782
Bases, Plates & Blocks, 768-772, 774-779
Bases, 768-769, 778-779
Plates, 770-772
Blocks, 774-775, 777
Clamps & Handles, 773, 780-782
Cross Clamps, 773, 781
Quick Clamps, 780
Clamp Handles, 782

FINISHING YOUR FRAME, 783-826
Finishing Your Frame Education, 785-786
End Caps and End Cap Hardware, 787-792
T-slot Covers, 793-797
Tread Strip, 798
Wire, Cable and Tube Management, 799-808
Wiremold® Power Strips, 809
Anodize Breaker, 810
Grounding Terminal, 811
Storage Bins and Hangers, 812-813
Monitor Mounts, 814-815
Tool Hangers, 816-817
Mount Hooks, 818-819
Tool Holders, 820-821
Cup Holders, 822
Clamps and Label Holders, 823-824
Rubber Bumpers, 825
Tabletop Mounting Tape, 826

STRUCTURAL SHAPES, 827-856

Product Type Index

Structural Shapes Education, 828
Flat Stock Profiles, 829-830
Block Profiles, 831
Square / Rectangular Tube Profiles, 832
Inside Corner Connector Profile, 833
Stanchion Profiles, 834
Aluminum Tube Profiles, 835
Steel Tubes, 836
Steel Solid Round, 837
Angle Profiles, 838-839
45 Degree Gusset Profiles, 840
Deadbolt Latch Profile, 841
Standard Nub Profiles, 842
Right Angle Nub Profiles, 843
Hinge Profiles, 844
Roll-In Panel Mount Bracket Profiles, 845
Panel Mount Block Profiles, 846
Clamp Block Profiles, 847
Flange Bearing Profiles, 848-849
Flange UniBearing™ Profiles, 850-851
Retainer Profiles, 852-853
Storage Bin Hanger Profile, 854
Panel Stiffener Profiles, 855
Tube Insert Profile, 856

MACHINING SERVICES, 857-906
Profile Machining, 859-880
Miter Cut Worksheet, 869
Linear Bearing Machining, 881-882
Quick Frame® Flange Milling, 883
Connector Rod Taps, 883
Panel Machining, 884-904
Miscellaneous Panel Milling, 905-906

TOOLS, 907-916
Fastener/Hex Tool Size Reference, 907
Ball End Combo Tools, 908
Ball Driver and "L" Wrench Sets, 908
Ball End Power Bits, 909
Ball End "L" Hex Wrenches, 909
Cheater Pipe, 910
Ball End Hex Drivers, 910
"T" Handle Hex Wrenches, 911
Combination Wrenches, 911
Six Lobe Tools, 912
Ball End Hex Sockets, 912
Access Hole Drills, 913
Access Hole Drill Jigs, 913
Anchor Fastener Counterbore Cutters, 914
Soft Face Mallet, 914
Roll Pin Punch, 915
Attitude Lapel Pins, 915

Glossary

0 Degree Dynamic Pivot Nub	A connecting block that allows profiles to swing 180 degrees parallel to the mounting profile.
10 Series	80/20's family of T-slot profiles utilizing 1.0 inch and 0.5 inch centerlines.
15 Series	80/20's family of T-slot profiles utilizing 1.5 inch and 0.75 inch centerlines.
20 Series	80/20's family of T-slot profiles utilizing 20mm and 10mm centerlines.
25 Series	80/20's family of T-slot profiles utilizing 25mm and 12.5mm centerlines.
30 Series	80/20's family of T-slot profiles utilizing 30mm and 15mm centerlines.
40 Series	80/20's family of T-slot profiles utilizing 40mm and 20mm centerlines.
45 Series	80/20's family of T-slot profiles utilizing 45mm and 22.5mm centerlines.
45 Degree Support	Precut and assembled profiles with 45° miters that add strength to corner connections.
6105-T5	An aluminum alloy used in many 80/20 profiles. It offers high strength, excellent machinability, and a great aesthetic finish.
80/20 Builds	The project assembly division of 80/20® Inc. There are three service levels; preloading, subassembly and full assembly.
90 Degree Flat Plate	A connecting plate used to make right angle connections of T-slot profiles.
90 Degree Dynamic Pivot Nub	A connecting block that allows profiles to swing 180 degrees perpendicular to the mounting profile.
ABS Haircell	Acrylonitrile Butadiene Styrene: decorative plastic sheet material.
Access Hole	A hole specifically located in the T-slots that allow access to tighten an end fastener.
Adjustable Hinge	A hinge with adjustable tension between the leaves.
Aesthetic	Tasteful, pleasing, or inventive.
Align-a-Groove	Shallow grooves running the length of some of 80/20®'s T-slotted profiles that aid in aligning profiles during assembly.
Aluminum Composite	Two thin aluminum sheets bonded together with a corrugated polyallomer core.
Aluminum Extrusion	Aluminum bar produced by heating and pressing the aluminum material through a shaped opening in a die, forming a distinctive profile.
Anchor Fastener	A strong and adjustable fastener used to join two T-slotted profiles at right angles.
Anodize	A thin, protective electrochemical coating used on aluminum surfaces; can be clear or colored.
ASTM	The American Society for Testing Materials: organization that sets testing standards and methods for materials.
Attitude	Our positive, can-do disposition that sets 80/20® apart from the rest of the competition.
AutoQuoterX® II	80/20's free 64-bit accessible plugin used in conjuction with full versions of AutoCAD®.
BHSCS	Button Head Socket Cap Screw.
Black Chromate	A black, corrosion-resistant coating used on some ferrous screw products.
Black Zinc	A black, corrosion-resistant coating used on some metal products.
Bolt Assembly	A single part number that makes ordering combinations of fasteners easier and faster.
Bushing	A removable cylindrical lining for an opening used to limit the size of the opening, resist abrasion, or serve as a guide.
Butt Fastener	Connects profiles end-to-end for a strong, flush connection.
CAD	Computer Aided Design or Computer Aided Drafting.
Chamfer	To bevel off the right angled edge of a corner.
Cheater Pipe	An improvised breaker bar made from a length of pipe and a wrench, used to provide extra torque.
Clear Chromate	A clear, corrosion-resistant coating used on some ferrous metal products.
Coefficient of Friction	The amount of force between two materials rubbing against each other.
Counterbore	A cylindrical, flat-bottomed hole drilled partially through a profile.

Glossary

Countersink	To chamfer a screw hole to allow the screw head to remain level with the mounting surface.
Cross Clamp	A stanchion block used to connect two tubes at right angles.
Cross Flat Plate	A pre-drilled plate used to connect profiles that intersect at right angles.
Deburr	To remove a sharp edge from a machined surface.
Double Flange	A part with two opposing projections, commonly used for attachment to other surfaces.
Double T-Nut	A T-nut containing two threaded holes with centerlines that match those of flat plates, used to speed up assembly.
Drill Jig	A fixture used for drilling perpendicular access holes.
Drop Lock	An 80/20 T-slot profile design feature that consists of a 2° decline in the T-slot flange. When a fastener is tightened to or beyond the necessary torque, the flange will press up to the adjoining profile, creating pressure that tightly holds the two bars together.
Dynamic Pivot Nub	An anchoring block fastened to the T-slot allowing mounted profiles full 180-degree motion, perpendicular to or parallel with the T-slot.
End Cap	A black plastic cover for the profile end.
End Fastener	A connecting clip and screw that provides a clean, hidden 90° connection for T-slot profiles.
Ergonomics	An applied science concerned with arranging things people interact with efficiently and safely.
FBHSCS	Flanged Button Head Socket Cap Screw.
FDA	The United States Food and Drug Administration.
FHSCS	Flat Head Socket Cap Screw.
Flange	A rib or rim for strength, for guiding, or for attaching to another object.
Flange Mount Caster	A caster with a pre-drilled flange to mount to a base plate.
Flat Plate	A pre-drilled joining plate or corner bracket used to connect profiles.
Floor Mount Base Plate	A pre-drilled bracket assembly used to anchor an application to the floor.
Friction Hinge	A hinge that holds doors open at variable angles to provide hands-free access for vertical-lifting smaller doors.
Gusset	A supported 45-degree angled bracket used to connect profiles at right angles.
HDPE	High Density Polyethylene.
High Pressure Laminate	A high strength, durable material used for workstations, countertops, and other work surfaces.
Inside Corner Bracket	A pre-drilled angled fastener used to connect profiles at right angles.
Jam Nut	A hex nut used to fix the height position of a threaded leveling foot or caster in the end of a profile.
“L” Structural Pivot Arm	A pre-drilled angled fastener used to connect profiles to pivot nubs.
Leveling/Anchoring Base Plate	A pre-drilled and tapped plate used to mount both leveling feet and floor anchor bolts to a profile frame.
LHSCS	Low Head Socket Cap Screw.
Lift-Off Hinge	An aluminum hinge designed to allow door panels to be removed easily by lifting the door while open. It also utilizes two pin lengths to facilitate fast, easy door replacement.
Linear Bearing	A slide that allows in-line motion using the T-slotted frame as a rail, and UHMW-PE bearing pads as guides. Patented by 80/20®.
Linear Bearing Brake Hole	A precisely located hole that allows for attachment of brake hardware to the bearing housing.
Linear Bearing Brake Kit	The hardware kit consisting of a handle, washer, and T-slot stud used to fix the position of a linear bearing.
Locking Grabber™ Handle	A cabinet latch used for panel doors that locks with a key.
Mesh Retainer	An anchoring bracket that attaches wire cloth or expanded metal panels to a T-slot frame.

Glossary

Miter Cut	An angled cut.
Mounting Block	Used to attach a hollow or solid round tube profile to a T-slot frame.
MW	Molecular Weight: used in measuring plastic density.
Neoprene	A black, hard rubber product.
Nylatron GS	An extruded plastic used in the manufacturing of 80/20 roller wheels.
Nylon	Any of several polymeric, thermoplastic amides formed into strong elastic thread by forcing a melt through fine jets.
Open Style Access Hole	Customer-specified locations for access holes used to tighten end fasteners.
OSHA	Occupational Safety and Health Administration.
Panel Mount Block	An adjustable mounting block, keyed to the T-slot, used to mount panels to a profile frame.
Panel Retainer	An anchoring bracket that attaches plastic or sheet panels to a T-slot frame.
Pawl	A rotating catch used to capture and hold a door shut.
Phenolic Resin	A decorative, durable surface with exceptional impact and scratch resistance.
Pivot	To turn or oscillate on. To rotate about a stationary point.
Pivot Bracket	A flat plate that allows a profile to pivot 90º or 180º relative to the mounting profile and lock in place.
Polycarbonate	An impact-resistant thermoplastic resin that is hard, tough, and moisture resistant. Trade names Lexan® or Makrolon® polycarbonate
Polyurethane	A tough flexible plastic with high load bearing properties used on some 80/20 casters.
Position Floor Lock	A braking device that prevents a frame on wheels from rolling.
Powder Coat	An electrostatically applied paint that provides superior protection.
Preload	To load fasteners onto a flat plate or bracket to speed up assembly.
Pressure Manifold Plate	A pre-drilled plate used with a gasket to form a pressurized air or fluid chamber inside the cavity of a T-slotted profile.
PVC	Polyvinyl Chloride: used in lightweight plastic sheet and snap-on panel gaskets.
Quick Frame®	80/20's economical, lightweight framing alternative, utilizing one-inch square aluminum tubing and nylon push-in corner connectors.
Ready Tube®	Aluminum framing system featuring prefabricated mounting holes.
RGA	Returned Goods Authorization: A number assigned by 80/20's customer service department to allow faster processing of a return shipment.
Dynamic Right Angle Pivot Nub	A connecting block that allows mounted profiles to swing 90 degrees parallel to or perpendicular to the attached T-slot.
Rigid Caster	A wheel that is intended for straight back and forth motion. It can be combined with a swivel caster to provide directional change.
Roller Wheel	A wheel, keyed to fit the 80/20 profile T-slot, allowing 80/20 profiles to be used as rails.
Rust	Oxidation commonly associated with steel products.
SS	Stainless Steel.
SHCS	Socket Head Cap Screw.
Single Flange	A material with one projection, commonly used for attachment to other surfaces.
Slotted Corner Bracket	A fastener used for connecting profiles at right angles. The slotted holes allow for easy adjustments.
Stanchion	A block used for mounting round tubes to a T-slotted frame, adding a fourth or fifth axis of mobility.
Swivel Caster	A wheel that enables pivot turns and instant response to directional change.
Tap	To add threads to an extruded hole in a T-slot profile.
"T" Flat Plate	A pre-drilled plate used to connect profiles that intersect at right angles.

Glossary

Threaded Stem Swivel Caster	A steerable wheel mounted to a frame by means of a threaded rod.
T-Nut	A special threaded flat screw nut designed to fit into the T-slot of 80/20® profiles.
Transition Bracket	A pre-drilled angled bracket designed to connect different series of profiles.
Transition Plate	A pre-drilled plate designed to connect different series of profiles.
Triple T-Nut	A T-nut with three threaded holes with centerlines that match those of flat plates, used to speed up assembly.
T-Slot Cover	A cover that fits in a T-slot channel to prevent dust and debris build up, cover wires and tubes, and add a polished look.
T-Slot Designation Chart	A diagram to assist in locating machining service points for 80/20® T-slotted profiles.
T-Slot Stud	A threaded bolt designed so that the bolt head fits into the T-slot of a profile, leaving the threaded end protruding.
T-Slot	An opening extruded into, or machined out of, a solid surface in the shape of a “T,” designed to capture or hold in place fasteners that can be located anywhere along the surface of the material.
TYP.	Typical.
USDA	United States Department of Agriculture.
UHMW	Ultra High Molecular Weight
UHMW-PE	Ultra High Molecular Weight Polyethylene: excellent abrasion-resistant material used for bearing pads.
Universal Dynamic Pivot Assembly	A connecting block assembly that allows mounted profiles to swing 180 degrees parallel to or perpendicular to the attached T-slot.
Universal Dynamic Pivot Nub	A connecting block that allows mounted profiles to swing 180 degrees parallel to or perpendicular to the attached T-slot.
Wire Duct	A one piece, flexible molded nylon duct for containing wires and tubes. Open slots allow for lead offs; pieces snap together end to end for continuous travel.
Zinc Plating	A bright silver or black corrosion-resistant coating used on some metal products.

CUSTOM **MACHINING**

MODIFY OR CREATE
ALL NEW PARTS

PANEL **SHOP**

OVER 100 PANEL TYPES
MACHINED IN-HOUSE

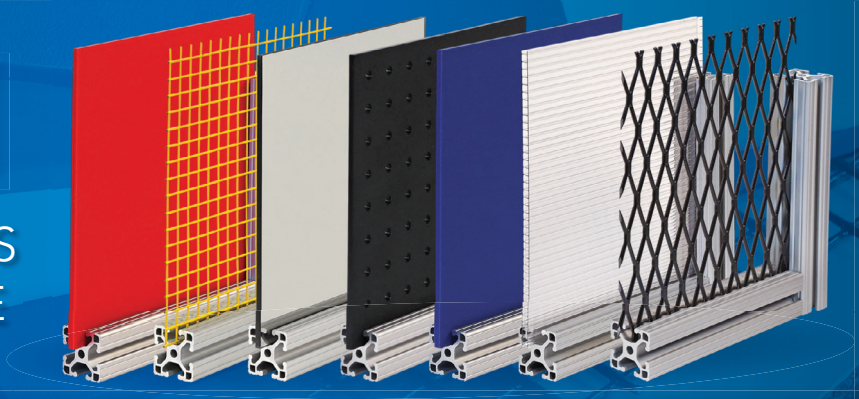

80/20 **BUILDS**

SAVE TIME
& LABOR

CUSTOM **PACKAGING**

KITTING, BAR-CODING, PART-
TAGGING, BUBBLE WRAPPING

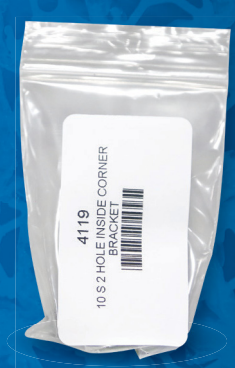

EMAIL YOUR DRAWING CONCEPT TO SERVICES@8020INC.COM

80/20's free CAD design software, AutoQuoterX® II,
is available for download at www.8020.net

EMAIL YOUR DRAWING CONCEPT TO SERVICES@8020INC.COM

80/20's free CAD design software, AutoQuoterX® II,
is available for download at www.8020.net

SOCIAL MEDIA

Facebook
facebook.com/8020solutions

Twitter
twitter.com/8020inc

LinkedIn
linkedin.com/company/
80-20-inc-columbia-city/

Instagram
instagram.com/8020inc

Pinterest
pinterest.com/8020stuff

YouTube
youtube.com/8020inc

FOLLOW 80/20 ONLINE

SOLUTIONS
MADE WITH 80/20

MOBILE WORKSTATIONS
MACHINE SAFETY GUARDS
LABORATORY ENCLOSURES
HYDRAULIC LIFTS
ROBOTIC ARMS
DISPLAYS

CONVEYING SYSTEMS
MODULAR WORK CELLS
MACHINE FRAMES
FLOW RACKS
PICK AND PLACE SYSTEMS
CLEAN ROOM ENCLOSURES

EXHIBIT BOOTHS
GARAGE STORAGE
OFFICE FURNITURE
RACING SIMULATOR
MUCH MORE!

T-Slot **Modular Solution**

80/20 Inc.
*The **Industrial** Erector Set®*

Copyright © 2019 80/20® Inc. All rights reserved.
Catalog 23, Part No. L1019
1701 South 400 East, Columbia City, IN 46725
Ph: 260-248-8030 • Fax: 260-248-8029

80/20 Recycles

Learn More at 8020.net