CLIFF

12V STEPPING MOTOR

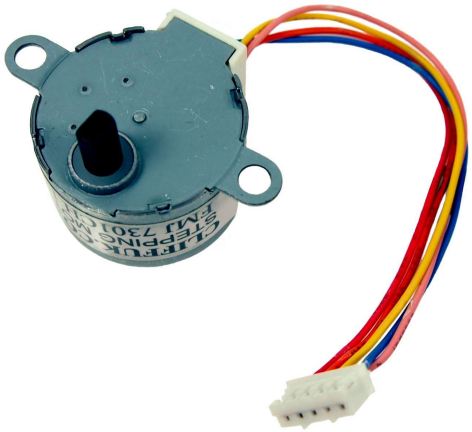

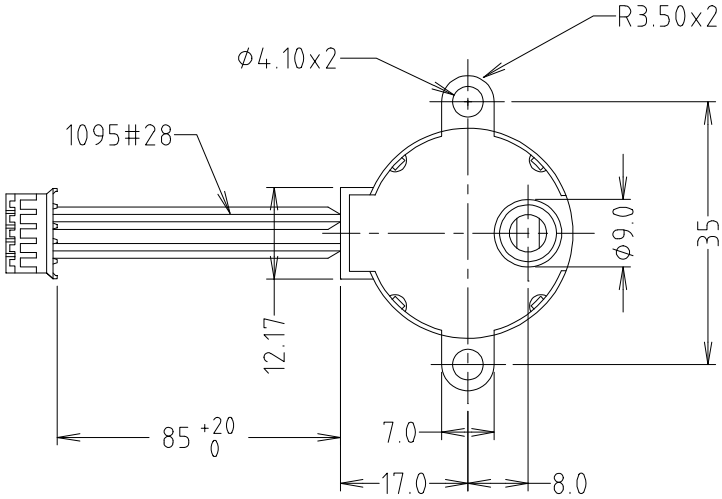

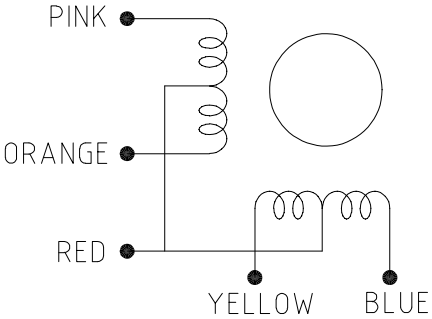

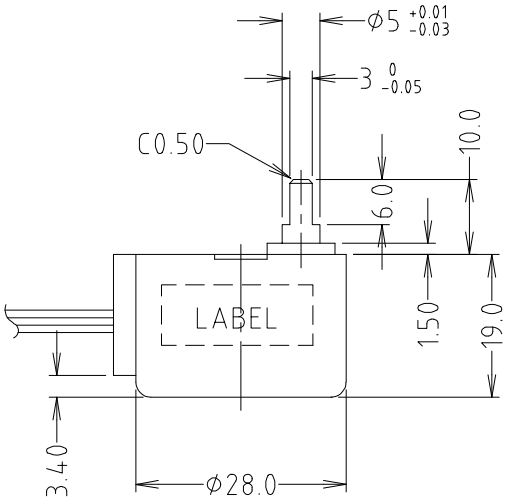

1-2 PHASE EXITIATION. UNIPOLAR DRIVE

WIRE SEQUENCE	WIRE COLOUR	1	2	3	4	5	6	7	8
1	RED	+	+	+	+	+	+	+	+
2	ORANGE	-	-						-
3	YELLOW				-	-	-		
4	PINK						-	-	-
5	BLUE		-	-	-				

Specification

Current rating: 12V. 32mA OR 5V. 71mA
Impedance: 280Ω
Pull-in Torque: 380gm-cm
Output shaft rotation: CCW
Step Angle: 5.625/11.25
Gear Ratio: 1:64
Min Detent Torque: 310gm-cm
Max Starting pulse rate: 700pps
Max Slewing pulse rate: 1400pps
Temperature rise: 50° MAX.
Noise: 34dB MAX.

Part No: **FMJ7301CH**

© CLIFF 01/2024 ISS.1

For further information, contact sales@cliffuk.co.uk

Cliff Electronic Components Limited,
76 Holmethorpe Avenue, Holmethorpe Ind. Estate,
Redhill, Surrey RH1 2PF U.K.
Tel: +44 (0)1737 771375 Fax: +44 (0)1737 766012

RoHS

www.cliffuk.co.uk