Auf dem Schüffel 1
D-58513 Lüdenscheid
Tel.: +49-2351 - 5542-00
Fax +49 (2351) 554-861
info@assmann-wsw.com
www.assmann-wsw.com

PRODUCT CHANGE NOTIFICATION (PCN)

ISSUE DATE: 25/4/2022
MODIFICATION / REVISION DATE: 25/4/2022

AMJE0808-0300-BUB-24
MODULAR CABLE

CHANGE NOTIFICATION: PCN 20220425_AMJE0808-0300-BUB-24

DESCRIPTION OF CHANGES:
CHANGE OF DATA SHEET
CHANGE OF DATA SHEET
New Draw.-No. ASS_7948_CArev04

REASON FOR CHANGE:
CHANGE OF PRODUCT LOCATION
CHANGE OF PRODUCT LOCATION

KEY CHARACTERISTICS OF CHANGE: Details see page 3

PRODUCTS AFFECTED: AMJE0808-0300-BUB-24

DATE OF CHANGE AND IMPLEMENTATION:
CHANGE: WEEK 18 / YEAR 2022
IMPLEMENTATION: 25/4/2022

RESPONSE: NO RESPONSE TO THIS NOTIFICATION IS REQUIRED

PCN REVISION HISTORY:
DATE OF REVISION: 25/4/2022 REVISION NUMBER: 00

Auf dem Schüffel 1
D-58513 Lüdenscheid
Tel.: +49-2351 - 554-200
Fax +49 (2351) 554-861
info@assmann-wsw.com
www.assmann-wsw.com

PRODUCT CHANGE NOTIFICATION (PCN)

ISSUE DATE: 25/4/2022
MODIFICATION / REVISION DATE: 25/4/2022

REFERENCE DOCUMENTS / ATTACHMENTS:
DOCUMENT: DRAWING

ASSMANN WSW P/N	Drawing Number		ASSMANN WSW P/N	Drawing Number
AMJE0808-0300-BUB-24	ASS_7948_CArev03	↔	AMJE0808-0300-BUB-24	ASS_7948_CArev04

PCN REVISION HISTORY:
DATE OF REVISION: 25/4/2022 REVISION NUMBER: 00

Auf dem Schüffel 1
D-58513 Lüdenscheid
Tel.: +49-2351 - 554-200
Fax +49 (2351) 554-861
info@assmann-wsw.com
www.assmann-wsw.com

PRODUCT CHANGE NOTIFICATION (PCN)

ISSUE DATE: 25/4/2022
MODIFICATION / REVISION DATE: 25/4/2022

OLD VERSION

Apprearance

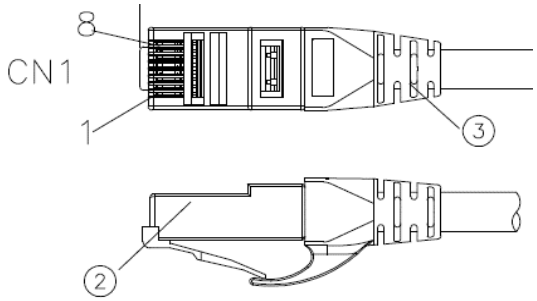

BOM

③	Molding	PVC 45P Color: see order code	NA	KG
②	CONNECTOR	RJ45 8P8C two fork 3u" gold plated	2	PCS
①	CABLE	CAT5e UTP (24AWG*1PR)*4+PVC OD=5.2±0.3MM Color: see order code	NA	MM
NO:	NAME	DESCRIPTION	Q'TY	UNIT

NEW VERSION

Apprearance

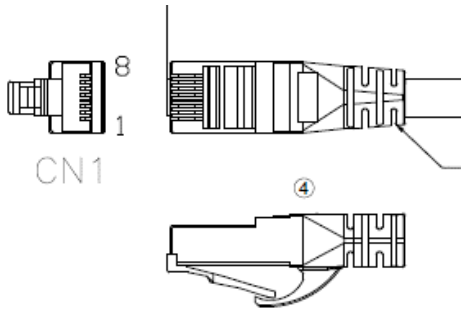

BOM

3	Molding	PVC 65P Color: see order code ④	NA	KG
2	CONNECTOR	RJ45 8P8C two fork 3u" gold plated	2	PCS
1	CABLE	CAT5e U/UTP (24AWG*1PR)*4+PVC OD=5.2± 0.3MM Color: see order code ④	NA	MM
NO:	NAME	DESCRIPTION	Q'TY	UNIT

FOR DETAIL, PLEASE TAKE ATTACHED NEW DRAWING: FOR REFERENCE

PCN REVISION HISTORY:
DATE OF REVISION: 25/4/2022 REVISION NUMBER: 00

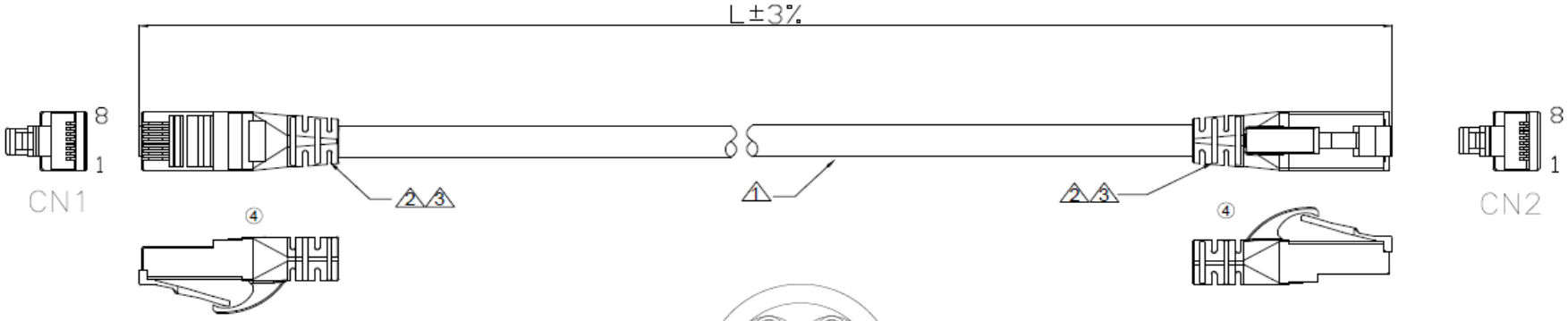

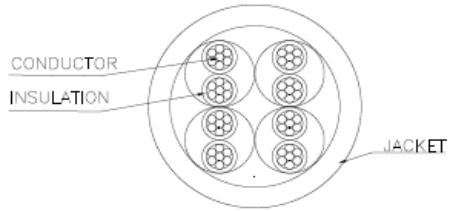

PIN OUT

CN1	WIRE COLOR	CN2
1	ORANGE/WHITE	1
2	ORANGE	2
3	GREEN/WHITE	3
6	GREEN	6
4	BLUE	4
5	BLUE/WHITE	5
7	BROWN/WHITE	7
8	BROWN	8

Electrical test:
Open/short/intermitence: 100%

NO:	NAME	DESCRIPTION	Q'TY	UNIT
3	Molding	PVC 65P Color: see order code ④	NA	KG
2	CONNECTOR	RJ45 8P8C two fork 3u" gold plated	2	PCS
1	CABLE	CAT5e U/UTP (24AWG*1PR)*4+PVC OD=5.2± 0.3MM Color: see order code ④	NA	MM

WSW order code
AMJE0808-xxxx-xxB-24①

Cable length
③ 0018: 0.18M
0030: 0.3M
② 0036: 0.36M
0050: 0.5M
② 0061: 0.61M
0100: 1.0M
0150: 1.5M
0200: 2.0M
0300: 3.0M
0500: 5.0M
0700: 7.0M
1000: 10M
1500: 15M

Cable&Molding color
BK: Black
RD: Red
YE: Yellow
GN: Green
GY: Grey
BU: Blue
WH: White
BN: Brown

RoHS compliant
Unit: mm

Scale	Free
TOLERANCE	
DIM	TOL
Angle	TOL

Id.	Modification	Date	Name		Date	Name
④	Change the plant	12.04.2022	Luca	Drawn	1.11.2017	Stephen
③	Add new cable length version	25.07.2019	Amy	Approved	12.04.2022	Luca
②	ADD NEW SPC.	01.11.2017	Stephen			
①	Update the WSW order code	02.06.2017	Amy			
⓪	Drawn	30.03.2017	Amy			

ASSMANN WSW components

Customer-No.

ASSMANN WSW-No.
① AMJE0808-xxxx-xxB-24

Drawing-No.
ASS 7948 CA

rev04

Replace

Sheet

CAB0790