Accessories

Illumination

Surface light for VISOR®

Part number	Article number	Description
LF45 W-24-2L12	525-51147	Surface light, VISOR®, white, 12-pin
LF45 R-24-2L12	525-51148	Surface light, VISOR®, red, 12-pin
LF45 IR-24-2L12	525-51149	Surface light, VISOR®, infrared, 12-pin*
		No switching amplifier required

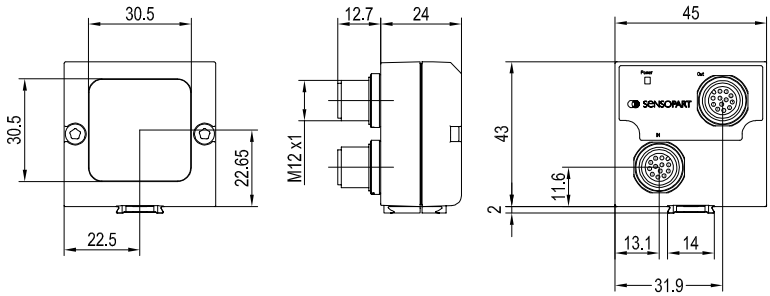

* External IR illumination can only be combined with IR Types or C-Mount sensors.
LED area lighting for incidental illumination in IP67 housings. Can be cascaded to illuminate from several directions.

Spot illumination VISOR®

Part number	Article number	Description
LS 55 x 46 WK-24-A13 2L12	532-51101	Illumination, VISOR®, Spot, LS 55x46, white, 2 x M12/12-pin
LS 55 x 46 RK-24-A13 2L12	532-51102	Illumination, VISOR®, Spot, LS 55x46, red, 2 x M12/12-pin
LS 55 x 46 IRK-24-A13 2L12	532-51103	Illumination, VISOR®, Spot, LS 55x46, infrared, 2 x M12/12-pin*
		No switching amplifier required

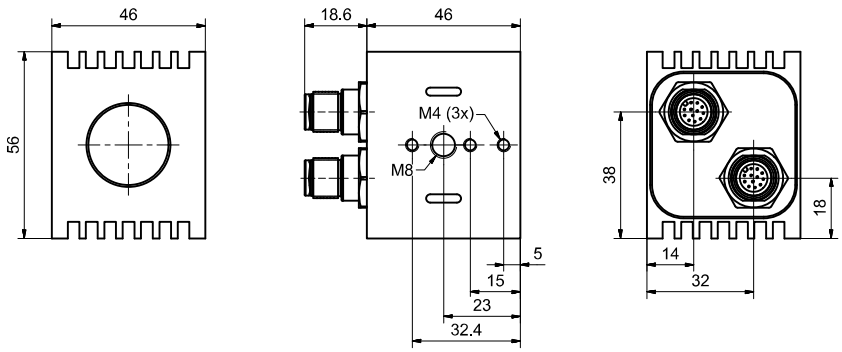

* External IR illumination can only be combined with IR Types or C-Mount sensors.

Multishot

Part number	Article number	Description
LM 300 WWK-24Q4-2L12	525-51158	Illumination Mulitshot, 4 x LF 45 white, including MG 3A for VISOR®, mounting, apre-assembled on retaining ring and pre-wired with 3 special cables, beam angle 60°, changeable to 30°
LM 300 RWK-24Q4-2L12	525-51159	Illumination Mulitshot, 4 x LF 45 red, including MG 3A for VISOR®, mounting, apre-assembled on retaining ring and pre-wired with 3 special cables, beam angle 60°, changeable to 30°
LM 300 IWK-24Q4-2L12	525-51160	Illumination Mulitshot, 4 x LF 45 infrared, including MG 3A for VISOR®, mounting, apre-assembled on retaining ring and pre-wired with 3 special cables, beam angle 60°, changeable to 30°

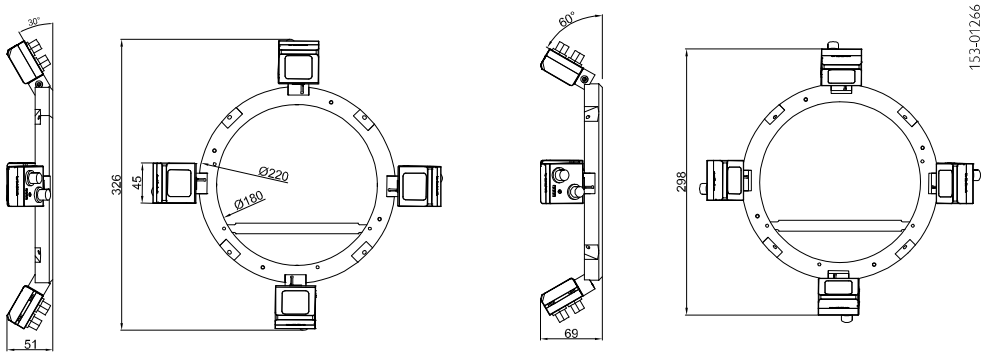

Part number	Article number	Description	Draw.
LM 100 WWK-24Q4-2L12	532-51096	Ring light, angled, 100 mm, white, individual control of 4 segments for Multishot, connection with illumination cable without LA 45	1
LM 100 RWK-24Q4-2L12	532-51097	Ring light, angled, 100 mm, red, individual control of 4 segments for Multishot, connection with illumination cable without LA 45	1
LM 100 W DF	532-51098	Diffuser for LM 100, angled	2

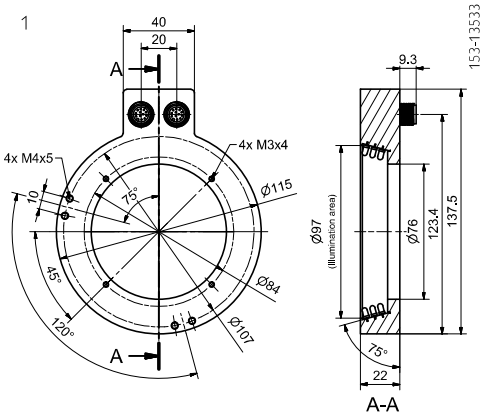

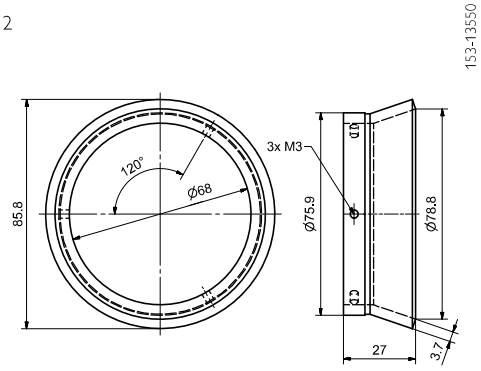

A

Accessories

Illumination

Ring light for VISOR®

Part number	Article number	Description	Angle bracket
LFR 115 WD-24-2L12	525-51150	Ring light, VISOR®, white, diffuse, 12-pin	543-11015
LFR 115 RD-24-2L12	525-51151	Ring light, VISOR®, red, diffuse, 12-pin	543-11015
LFR 115 ID-24-2L12	525-51152	Ring light, VISOR®, infrared, diffuse, 12-pin*	543-11015
LFR 115 WK-24-2L12	525-51153	Ring light, VISOR®, white, clear, 12-pin	543-11015
LFR 115 RK-24-2L12	525-51154	Ring light, VISOR®, red, clear, 12-pin	543-11015
LFR 115 IK-24-2L12	525-51155	Ring light, VISOR®, infrared, clear, 12-pin*	543-11015
		No switching amplifier required	

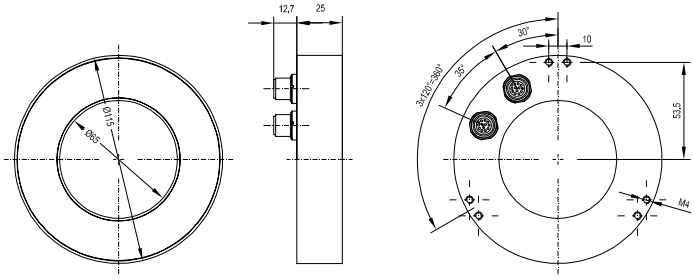

153-00926

* External IR illumination is only possible for IR types or C-Mount sensors.
LED ring lighting for incidental illumination in IP67 housings. Can be cascaded to illuminate from several directions.

Ring light

Part number	Article number	Description	Angle bracket	Draw.
LR 32 W-24-KFL5	532-51000	Ring light, 32 mm, white	543-11016	1
LR 56 W-24-KFL5	532-51001	Ring light, 56 mm, white	543-11019	2
LR 70 W-24-KFL5	532-51002	Ring light, 70 mm, white	543-11017	3
LR 32 R-24-KFL5	532-51003	Ring light, 32 mm, red	543-11016	1
LR 56 R-24-KFL5	532-51004	Ring light, 56 mm, red	543-11019	2
LR 70 R-24-KFL5	532-51005	Ring light, 70 mm, red	543-11017	3

1

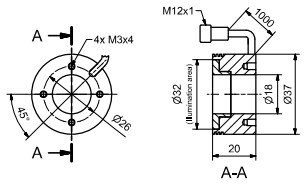

153-00726

2

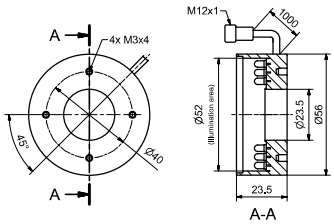

153-00727

3

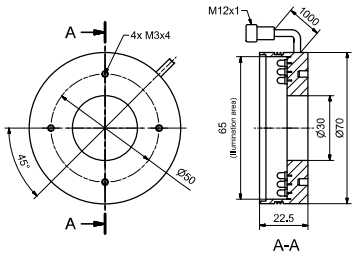

153-00731

LED ring lighting for the incidental illumination of objects.
Requires connection adapter for LED illumination LA 45 V(T)-24-2L12.

Ring light, angled and indirect

Part number	Article number	Description	Angle bracket	Draw.
LR 50 WW-24-KFL5	532-51006	Ring light, angled, 50 mm, white, 5-pin	543-11017	1
LR 74 WW-24-KFL5	532-51007	Ring light, angled, 74 mm, white, 5-pin	543-11018	2
LR 90 WW-24-KFL5	532-51008	Ring light, angled, 90 mm, white, 5-pin	543-11018	3
LR 132 WW-24-KFL5	532-51009	Ring light, angled, 132 mm, white, 5-pin	543-11015	4
LR 50 RW-24-KFL5	532-51010	Ring light, angled, 50 mm, red, 5-pin	543-11017	1
LR 74 RW-24-KFL5	532-51011	Ring light, angled, 74 mm, red, 5-pin	543-11018	2
LR 90 RW-24-KFL5	532-51012	Ring light, angled, 90 mm, red, 5-pin	543-11018	3
LR 132 RW-24-KFL5	532-51013	Ring light, angled, 132 mm, red, 5-pin	543-11015	4
LR 75 WI-24-KFL5	532-51014	Ring light, indirect, 75 mm, white, 5-pin	543-11018	5
LR 130 WI-24-KFL5	532-51015	Ring light, indirect, 130 mm, white, 5-pin	543-11015	6
LR 75 RI-24-KFL5	532-51016	Ring light, indirect, 75 mm, red, 5-pin	543-11018	5
LR 130 RI-24-KFL5	532-51017	Ring light, indirect, 130 mm, red, 5-pin	543-11015	6
LR 100 RI-24-2L12	532-51104	Ring light, indirect, 100 mm, red, 12-pin	543-11045	7

Funnel-shaped LED ring light for dark field illumination.
Requires connection adapter for LED illumination LA 45 V(T)-24-2L12.

1

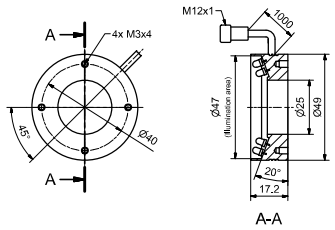

153-00730

2

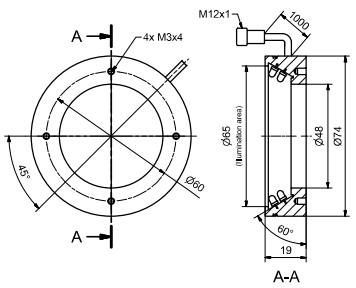

153-00732

3

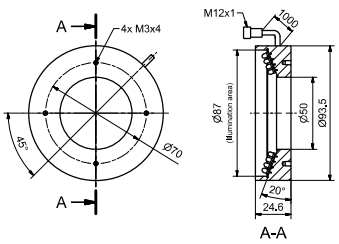

153-00734

4

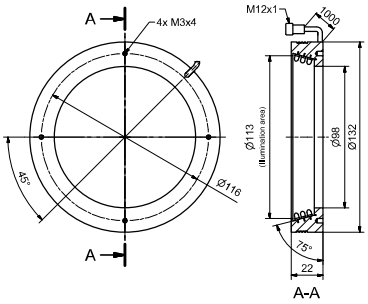

153-00738

5

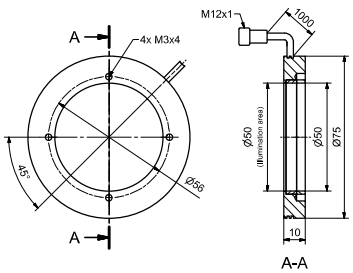

153-00733

6

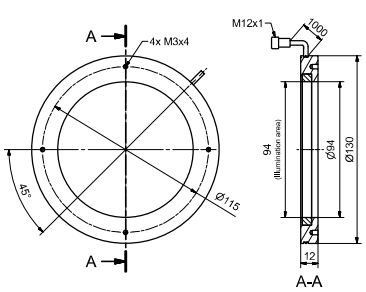

153-00737

7

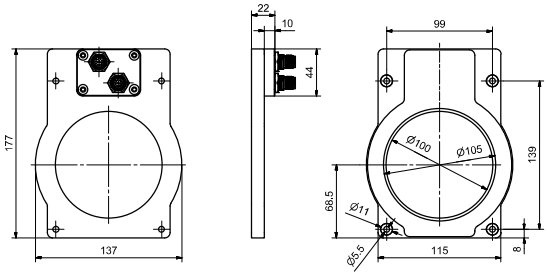

153-00662

A

Accessories

Illumination

Ring light, indirect, diffuse

Part number	Article number	Description	Angle bracket	Draw.
LR 70 WID-24-KFL5	532-51030	Ring light, indirect, diffuse, 70 mm, white	543-11019	1
LR 100 WID-24-KFL5	532-51031	Ring light, indirect, diffuse, 100 mm, white	543-11018	2
LR 70 RID-24-KFL5	532-51032	Ring light, indirect, diffuse, 70 mm, red	543-11019	1
LR 100 RID-24-KFL5	532-51033	Ring light, indirect, diffuse, 100 mm, red	543-11018	2

1

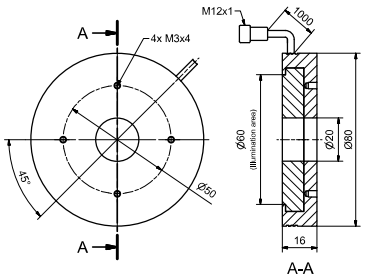

153-00729

2

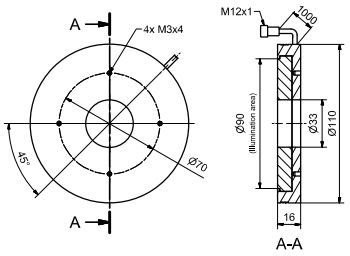

153-00735

Ring light, diffuse

Part number	Article number	Description	Angle bracket	Draw.
LR 70 WD-24-KFL5	532-51034	Ring light, diffuse, 70 mm, white	543-11019	3
LR 100 WD-24-KFL5	532-51035	Ring light, diffuse, 100 mm, white	543-11015	4
LR 70 RD-24-KFL5	532-51036	Ring light, diffuse, 70 mm, red	543-11019	3
LR 100 RD-24-KFL5	532-51037	Ring light, diffuse, 100 mm, red	543-11015	4

3

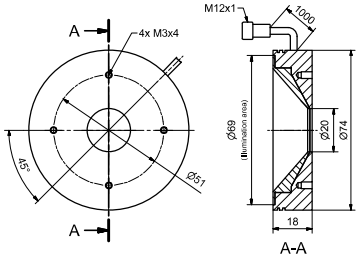

153-00728

4

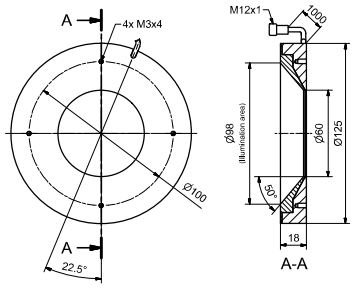

153-00736

LED ring light with LEDs shining surfacely and directly on centre of circle.
Requires connection adapter for LED illumination LA 45 V(T)-24-2L12.

Ring light, dome, diffuse

Part number	Article number	Description	Angle bracket
LD 50 WD-24-KFL5	532-51038	Ring light, dome, diffuse, 50 mm, white	543-11016
LD 50 RD-24-KFL5	532-51039	Ring light, dome, diffuse, 50 mm, red	543-11016

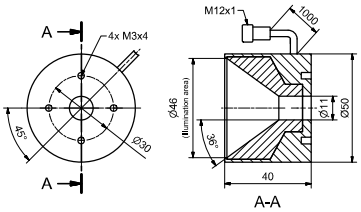

153-00704

LED ring lighting with funnel-shaped diffuser sheet for strongly reflective objects.
Requires connection adapter for LED illumination LA 45 V(T)-24-2L12.

Coaxial illumination

Part number	Article number	Description	Drawing
LK 25 R-24-KFL5	532-51043	Coaxial light, 25 mm, red	1
LK 46 R-24-KFL5	532-51044	Coaxial light, 46 mm, red	2

1

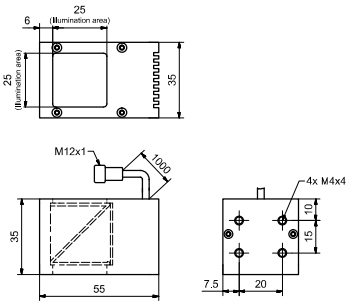

153-00830

2

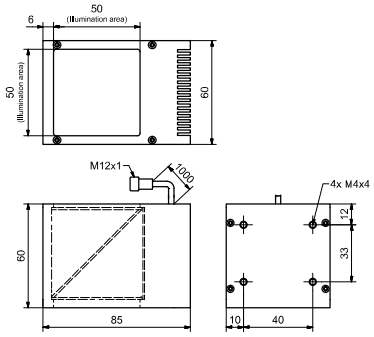

153-00831

Coaxial mirrored LED lighting for homogeneous illumination of reflected objects.
Requires connection adapter for LED illumination LA 45 V(T)-24-2L12.

Light strip, diffuse

Part number	Article number	Description	Type
LB 44 WD-24-KFL5	532-51026	Light strip, diffuse, 44 mm, white	1
LB 86 WD-24-KFL5	532-51027	Light strip, diffuse, 86 mm, white	2
LB 180 WD-24-KFL5	532-51049	Light strip, diffuse, 180 mm, white	3
LB 44 RD-24-KFL5	532-51028	Light strip, diffuse, 44 mm, red	1
LB 86 RD-24-KFL5	532-51029	Light strip, diffuse, 86 mm, red	2
LB 180 RD-24-KFL5	532-51052	Light strip, diffuse, 180 mm, red	3

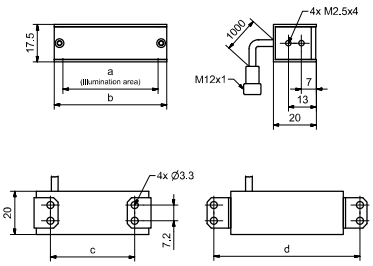

153-00756

	Type 1	Type 2	Type 3
a	44 mm	86 mm	180 mm
b	52 mm	94.5 mm	191 mm
c	39 mm	81.5 mm	178.5 mm
d	67.5 mm	110 mm	206.5 mm

Bar-shaped light strip with diffuser sheet for indirect illumination.
Requires connection adapter for LED illumination LA 45 V(T)-24-2L12.

Accessories

Illumination

Surface light

Part number	Article number	Description	Drawing
LF 36 WD-24-KFL5	532-51018	Surface light, diffuse, 36 mm, white	1
LF 51 WD-24-KFL5	532-51019	Surface light, diffuse, 51 mm, white	2
LF 100 WD-24-KFL5	532-51020	Surface light, diffuse, 100 mm, white	3
LF 36 RD-24-KFL5	532-51021	Surface light, diffuse, 36 mm, red	1
LF 51 RD-24-KFL5	532-51022	Surface light, diffuse, 51 mm, red	2
LF 100 RD-24-KFL5	532-51023	Surface light, diffuse, 100 mm, red	3
LF 51 PF	532-51099	Polarizer for LF 51	
LF 100 PF	532-51100	Polarizer for LF 100	

1

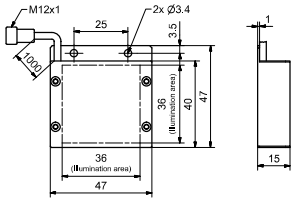

153-00758

3

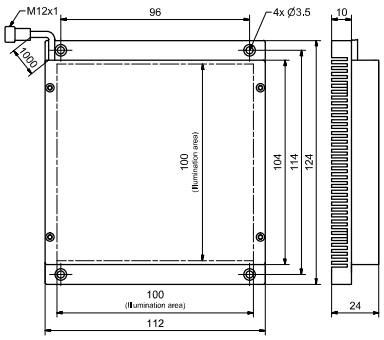

153-00762

2

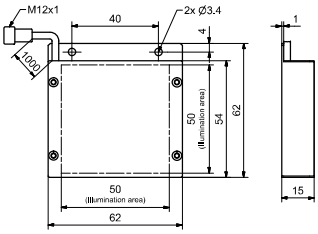

153-01282

Surface LED background illumination with very bright, regular surface illumination.
Requires connection adapter for LED illumination LA 45 V(T)-24-2L12.

Surface light

Part number	Article number	Description	Drawing
LF 60 A RD-24-KFL5	532-51041	Surface light, diffuse, 600 mm, red	1
LF 100 A RD-24-KFL5	532-51040	Surface light, diffuse, 100 mm, red	2
LF 200 A RD-24-KFL5	532-51025	Surface light, diffuse, 200 mm, red	3
LF 100 A WD-24-KFL5-65	532-51042	Surface light, diffuse, 100 mm, white, IP 65	4
LF 200 A WD-24-KFL5	532-51024	Surface light, diffuse, 200 mm, white	3

1

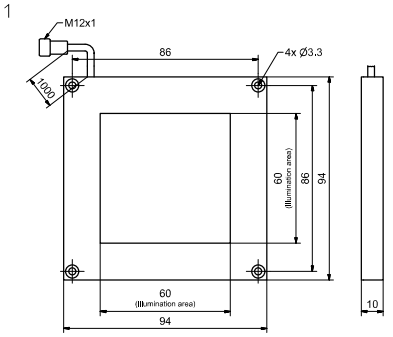

153-00827

2

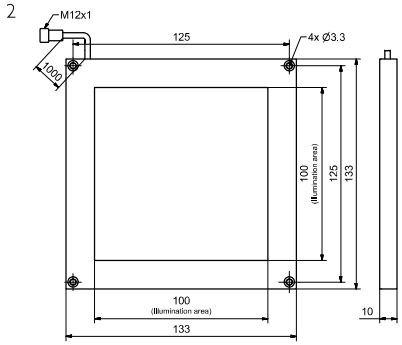

153-00828

3

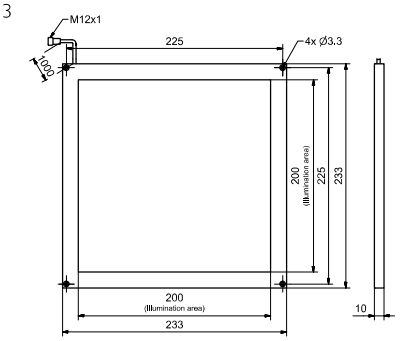

153-00757

4

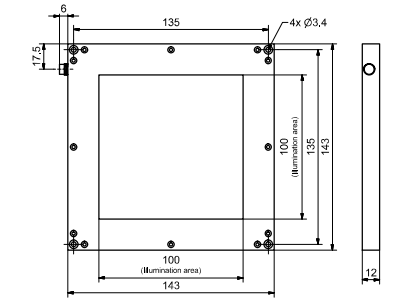

153-00829

Surface LED background lighting for diffuse illumination.
Requires connection adapter for LED illumination LA 45 V(T)-24-2L12.

A

Accessories

Illumination

Light strips, High Power, LBxxx

Part number	Article number	Description	Type
LB 250 WK 24 A15 3L5	532-51056	Light strip, 250 mm, white, clear glass, 24V DC, 15°, 3 x M12, 5-pin	1
LB 375 WK 24 A15 3L5	532-51057	Light strip, 375 mm, white, clear glass, 24V DC, 15°, 3 x M12, 5-pin	2
LB 625 WK 24 A15 3L5	532-51058	Light strip, 625 mm, white, clear glass, 24V DC, 15°, 3 x M12, 5-pin	3
LB 1000 WK 24 A15 3L5	532-51059	Light strip, 1000 mm, white, clear glass, 24V DC, 15°, 3 x M12, 5-pin	4
LB 250 WK 24 A35 3L5	532-51060	Light strip, 250 mm, white, clear glass, 24V DC, 35°, 3 x M12, 5-pin	1
LB 375 WK 24 A35 3L5	532-51061	Light strip, 375 mm, white, clear glass, 24V DC, 35°, 3 x M12, 5-pin	2
LB 625 WK 24 A35 3L5	532-51062	Light strip, 625 mm, white, clear glass, 24V DC, 35°, 3 x M12, 5-pin	3
LB 1000 WK 24 A35 3L5	532-51063	Light strip, 1000 mm, white, clear glass, 24V DC, 35°, 3 x M12, 5-pin	4
LB 250 RK 24 A15 3L5	532-51064	Light strip, 250 mm, red, clear glass, 24V DC, 15°, 3 x M12, 5-pin	1
LB 375 RK 24 A15 3L5	532-51065	Light strip, 375 mm, red, clear glass, 24V DC, 15°, 3 x M12, 5-pin	2
LB 625 RK 24 A15 3L5	532-51066	Light strip, 625 mm, red, clear glass, 24V DC, 15°, 3 x M12, 5-pin	3
LB 1000 RK 24 A15 3L5	532-51067	Light strip, 1000 mm, red, clear glass, 24V DC, 15°, 3 x M12, 5-pin	4
LB 250 RK 24 A35 3L5	532-51068	Light strip, 250 mm, red, clear glass, 24V DC, 35°, 3 x M12, 5-pin	1
LB 375 RK 24 A35 3L5	532-51069	Light strip, 375 mm, red, clear glass, 24V DC, 35°, 3 x M12, 5-pin	2
LB 625 RK 24 A35 3L5	532-51070	Light strip, 625 mm, red, clear glass, 24V DC, 35°, 3 x M12, 5-pin	3
LB 1000 RK 24 A35 3L5	532-51071	Light strip, 1000 mm, red, clear glass, 24V DC, 35°, 3 x M12, 5-pin	4
LB 250 IRK 24 A15 3L5	532-51055	Light strip, 250 mm, infrared, clear glass, 24V DC, 15°, 3 x M12, 5-pin	1
LB 375 IRK 24 A15 3L5	532-51072	Light strip, 375 mm, infrared, clear glass, 24V DC, 15°, 3 x M12, 5-pin	2
LB 625 IRK 24 A15 3L5	532-51073	Light strip, 625 mm, infrared, clear glass, 24V DC, 15°, 3 x M12, 5-pin	3
LB 1000 IRK 24 A15 3L5	532-51074	Light strip, 1000 mm, infrared, clear glass, 24V DC, 15°, 3 x M12, 5-pin	4
LB 250 IRK 24 A35 3L5	532-51075	Light strip, 250 mm, infrared, clear glass, 24V DC, 35°, 3 x M12, 5-pin	1
LB 375 IRK 24 A35 3L5	532-51076	Light strip, 375 mm, infrared, clear glass, 24V DC, 35°, 3 x M12, 5-pin	2
LB 625 IRK 24 A35 3L5	532-51077	Light strip, 625 mm, infrared, clear glass, 24V DC, 35°, 3 x M12, 5-pin	3
LB 1000 IRK 24 A35 3L5	532-51078	Light strip, 1000 mm, infrared, clear glass, 24V DC, 35°, 3 x M12, 5-pin	4
LB-250 DF	532-51090	Diffusor for light bar 250 mm	
LB-375 DF	532-51091	Diffusor for light bar 375 mm	
LB-625 DF	532-51092	Diffusor for light bar 625 mm	
LB-1000 DF	532-51093	Diffusor for light bar 1000 mm	

Accessories

Connection cables	From Page A-46	Brackets	From Page A-4

Light strips, High Power, LBxxx

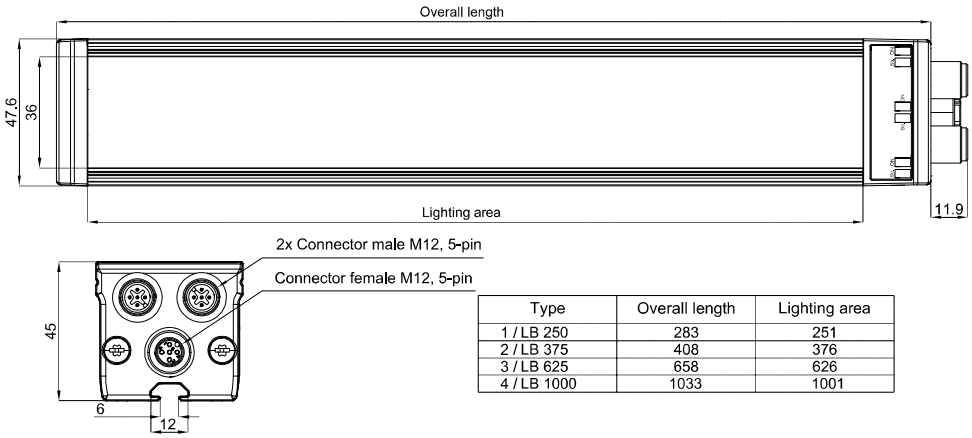

Type	Overall length	Lighting area
1 / LB 250	283	251
2 / LB 375	408	376
3 / LB 625	658	626
4 / LB 1000	1033	1001

Mounting

155-01926

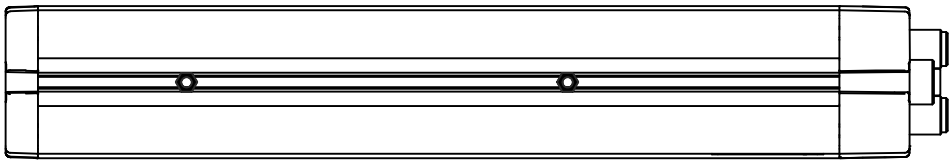

LB 250 / LB 375 = 2x M4 Nuts LB 625 / LB 1000 = 3x M4 Nuts

Wiring

male

154-00539

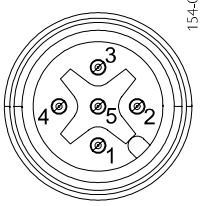

female

154-00540

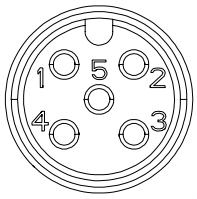

155-01927

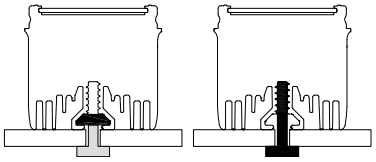

Nuts M4 supplied Screw M4 not supplied

154-00532

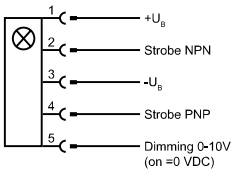

Connection illumination - sensor

155-01906

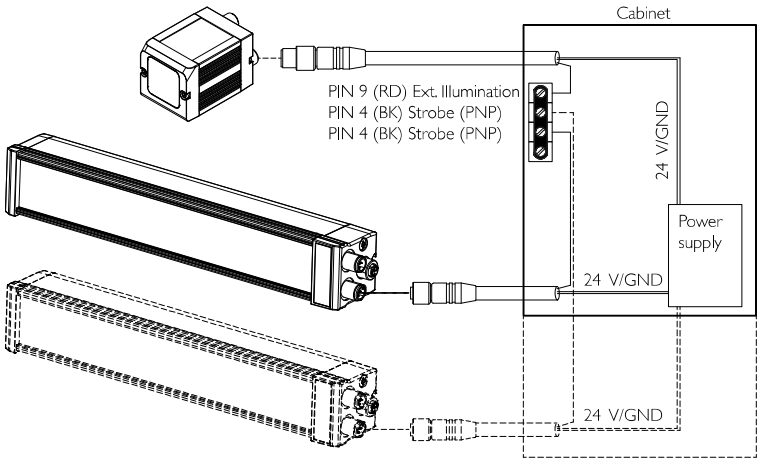

Continuous operation: Strobe = 24 V DC

A