Alle Rechte vorbehalten/ *All rights reserved*

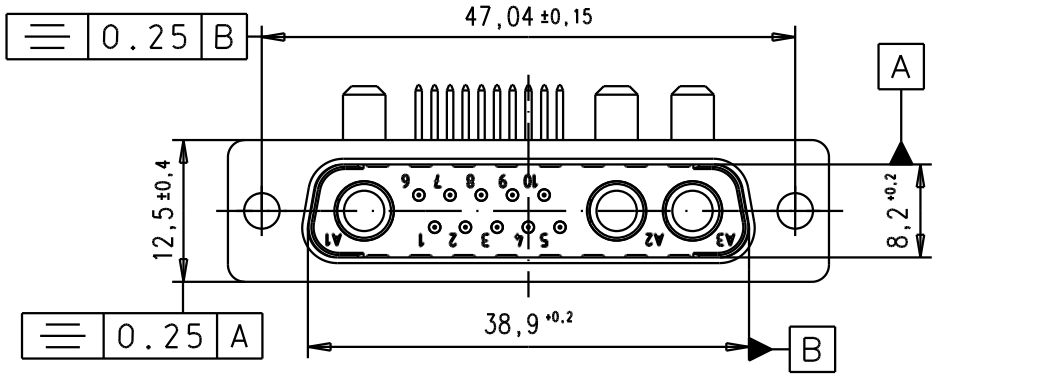

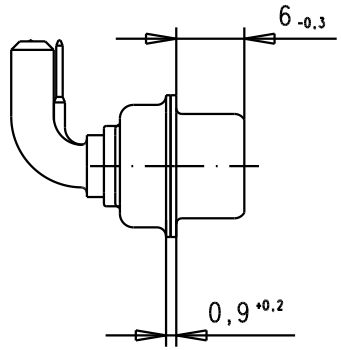

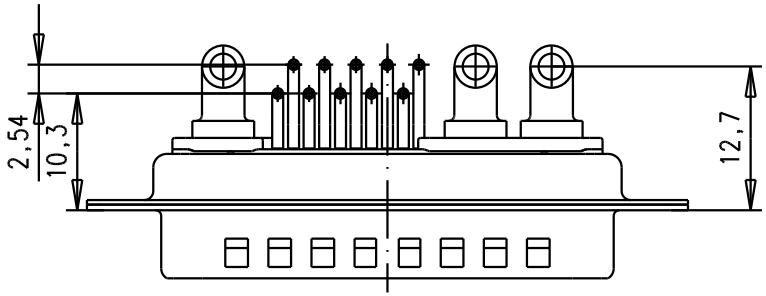

PCB hole pattern, mounting side

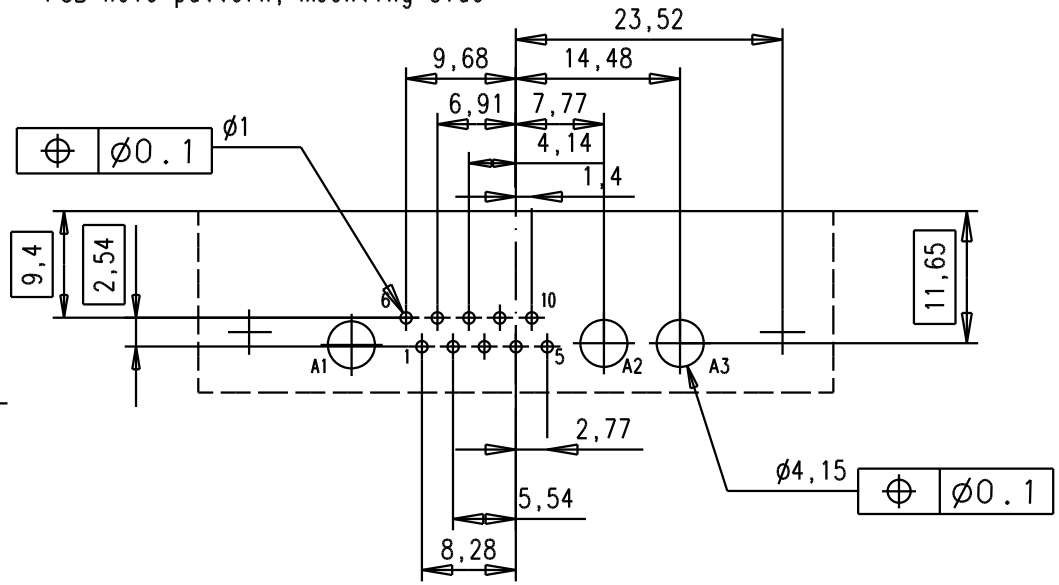

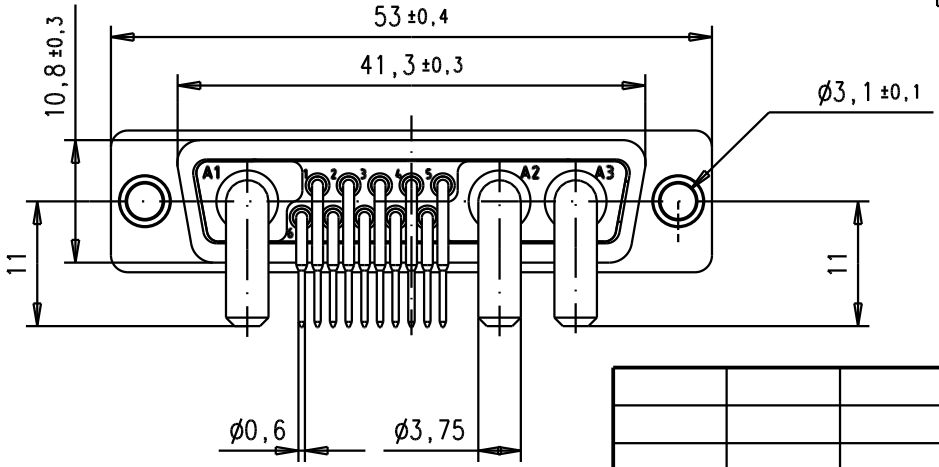

				Dat.	Name
			Detail.	05-AUG-03	TCP
			Insp.		
			Stand.		
31531	05-AUG-03	TCP			
Mod.	Dat.	Name			

All Dim. in mm
Orig. Size DIN A 4

D-sub, male, right angle, 13W3, 40 Amps, solder pins

Maßstab/ *Scale* 1.5:1

HARTING EURL
F-95972 Paris

TB 09 69 300 9018

Sub.

Blatt/ *Page* 1