REV.	ECN NO.	DATE	SIGN	DESCRIPTION
D	LEN-930190~4	2008/10/28	Li Xiu Zhi	Change SR
E	LEN1340088~92	2013/04/02	Tony_leng	Change SR
F	LEN1520261~69	2015/02/10	Ruru	Change Logo

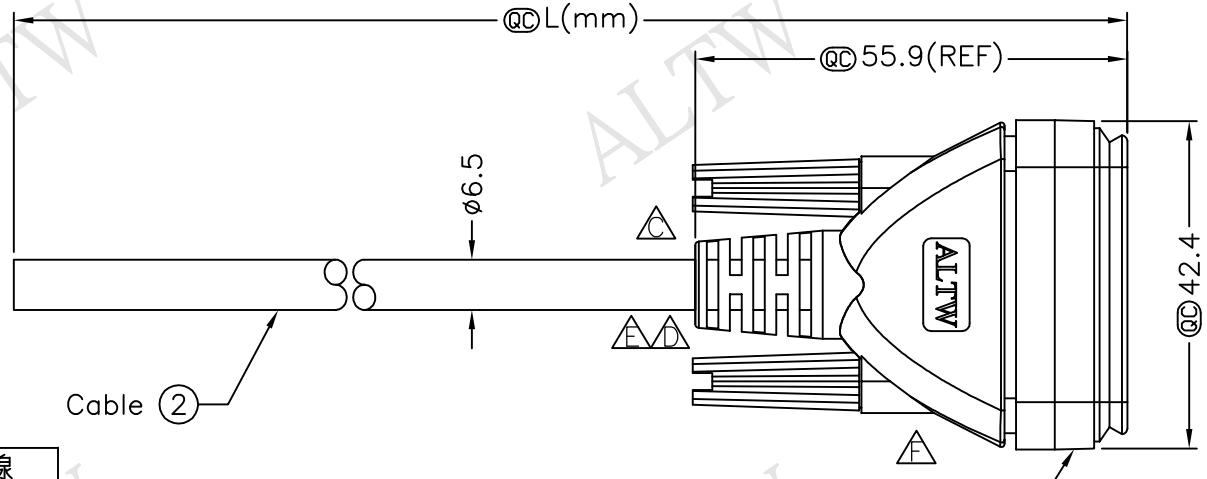

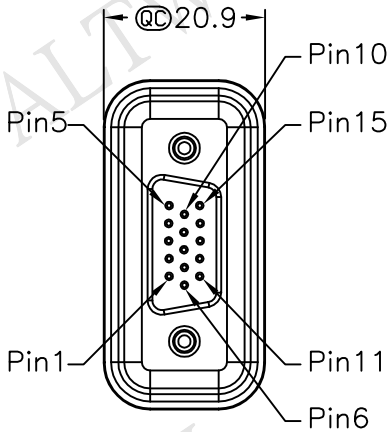

Pin	Wire Color	
Shield	Drain	地線
15	Red/White	紅/白
14	Brown/White	棕/白
13	Black/White	黑/白
12	Light Green	淺綠
11	Purple	紫
10	Orange	橘
9	Black	黑
8	Red	紅
7	Pink	粉紅
6	Gray	灰
5	Yellow	黃
4	Green	綠
3	White	白
2	Blue	藍
1	Brown	棕

Pin Out

HDB-15AMMM-SL7AXX

XX:01~99Meters
01:01Meter
02:02Meters
:
:
99:99Meters
Cable length(L):01~99Meters

Note:
* QC Important Dimension
* Waterproof Rate: IP67
* Connector: HD-Sub 15 Pin, Male
* Cable: UL2464 26AWG*15C+Drain+AL/My ,PVC Jacket(UV Resistant), OD=6.5mm, Black
* Cable Length Tolerance: 01M: ±40mm
  02M~05M: ±60mm
  06M~10M: ±100mm
  11M~30M: ±200mm
  31M~99M: ±500mm

ALTW DCC. DEPT. CONFIDENTIAL 2015.02.26 ISSUED

ALTW CONFIDENTIAL 2015.02.10 R&D DEPT.

UNIT:mm	TITLE: HD-SUB Conn Cable Screw HD15P M Conn M Pin	Amphenol LTW 安費諾亮泰企業股份有限公司	ITEM NO	DRAWN BY: Ruru	DATE: 2015/02/10
TOLERANCE: ±0.5 mm	SCALE: Free / SHEET: 1 OF 1		DWG NO: HDB-15AMMM-SL7AXX	CHECKED BY: Rita	DATE: 2015/02/10
	REV.: F / SIZE: A4 / QC :Inspection Item		CUSTOMER: ALTW	APPROVED BY: Lion	DATE: 2015/02/10

THIS DOCUMENT IS SUBJECT TO CHANGE WITHOUT NOTICE. IT IS CONFIDENTIAL AND A PROPERTY OF Amphenol LTW. DISCLOSURE TO THIRD PARTY HAS TO BE AUTHORIZED BY Amphenol LTW.