| REV. | ECN NO. | DATE | SIGN | DESCRIPTION |
|---|---|---|---|---|
| B | C220629 | 2022/05/03 | Vicky | B X8 |
| C | C230084 | 2023/01/30 | Vicky | C X1 |
| D | C240003 | 2024/01/02 | Vicky | D X2 |

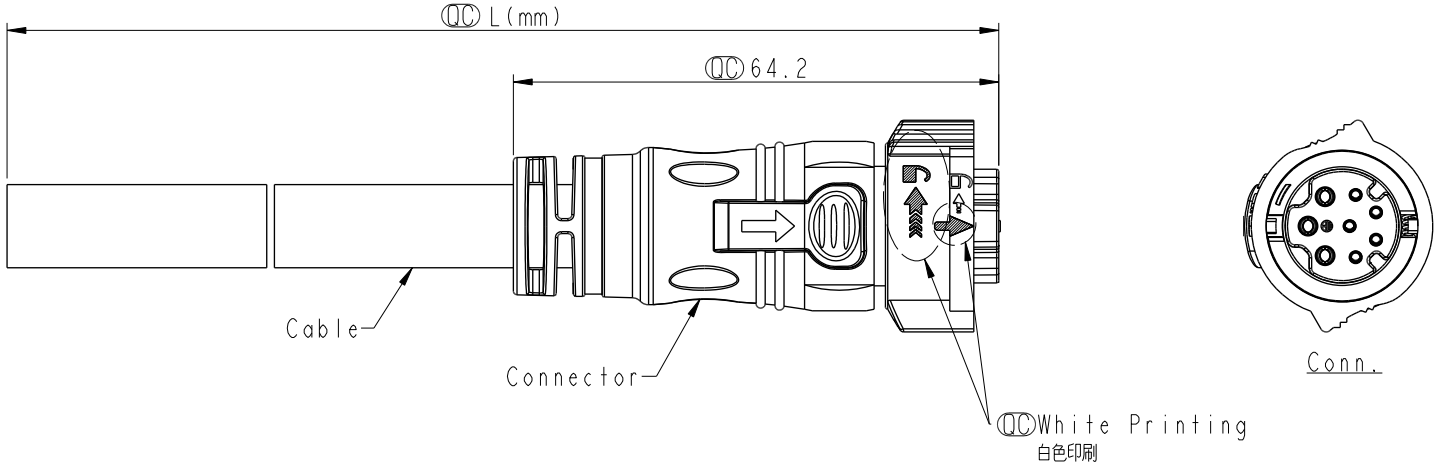




Conn.

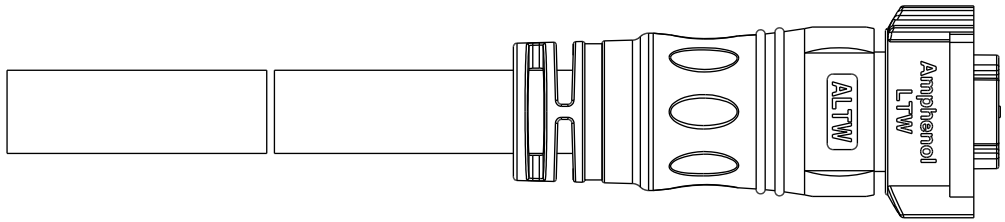


B
Note:
* RoHS Compliant
* QC Important dimension
C * Waterproof rate: IP68, mated 1m/24h
* Connector
  Housing: Thermoplastic, Black
  Pin: Copper alloy, Gold plated
  O-Ring: Rubber, Gray
  Nut: Thermoplastic, Black
  Outer mold: Thermoplastic, Black
* Cable: UL21996, PVC Jacket, Black
* Cable length tolerance: 1M: +50/-0 mm
  1M < L ≤ 3M: +100/-0 mm
  3M < L ≤ 5M: +150/-0 mm
  5M < L ≤ 10M: ±100 mm
  10M < L ≤ 20M: ±200 mm
  20M < L ≤ 30M: ±300 mm
  30M < L ≤ 99M: ±500 mm

| | | | | | |
|---|---|---|---|---|---|
| UNIT: mm | TITLE: XLOK, C-10A+5A, CABLE W/SR F, F, MOLDING, PUSH LOCK B | Amphenol LTW 安費諾亮泰企業股份有限公司 | ITEM NO | DRAWN BY: Vicky | DATE: 2024-01-02 |
| TOLERANCE ±0.5mm | SCALE 1:1 / SIZE A4 / SHEET 1 OF 2 | | DWG NO: B CBD-XXAFFM-QL8FXX | CHECKED BY: Rita | DATE: 2024-01-02 |
| | REV. D / WC-REV. A.2 | QC: Inspection item | CUSTOMER: ALTW | APPROVED BY: Fred | DATE: 2024-01-02 |

THIS DOCUMENT IS SUBJECT TO CHANGE WITHOUT NOTICE. IT IS CONFIDENTIAL AND A PROPERTY OF Amphenol LTW. DISCLOSURE TO THIRD PARTY HAS TO BE AUTHORIZED BY Amphenol LTW.

| Contacts | Cable OD | AWG | Item No. |
|---|---|---|---|
| 8P | 11.0 | 26/16 | CBD-08AFFM-QL8FXX |
| 6P | 10.3 | | CBD-06AFFM-QL8FXX |

B

B

CBD-XXAFFM-QL8FXX

XX: No. Of Pin

XX:01~99Meters
01:01Meter
02:02Meters
:
99:99Meters

| Pin Out | Pin # | Wire | |
|---|---|---|---|
| | 6 | Drain (26AWG) 地線 | |
| | 5 | Blue (26AWG) 藍 | Twist |
| | 4 | Red (26AWG) 紅 | Twist |
| | 3 | Black (16AWG) 黑 | |
| | 2 | Green (16AWG) 綠 | |
| | 1 | White (16AWG) 白 | |

D

| Pin Out | Pin # | Wire | |
|---|---|---|---|
| | 8 | Drain (26AWG) 地線 | |
| | 7 | Blue (26AWG) 藍 | Twist |
| | 6 | Red (26AWG) 紅 | Twist |
| | 5 | Green (26AWG) 綠 | Twist |
| | 4 | White (26AWG) 白 | Twist |
| | 3 | Black (16AWG) 黑 | |
| | 2 | Green (16AWG) 綠 | |
| | 1 | White (16AWG) 白 | |

D

Conn.

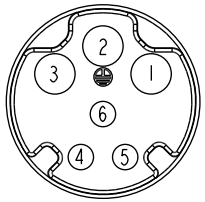


6P

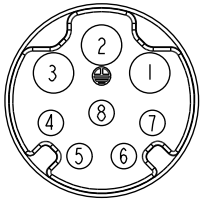


8P

B Pin Assignments Front View

UNIT:mm

TOLERANCE

±0.5mm

TITLE: XLOK, C-10A+5A, CABLE W/SR F, F, MOLDING, PUSH LOCK B

| SCALE | SIZE | SHEET |
|---|---|---|
| 1:1 | A4 | 2 OF 2 |
| REV. D | WC-REV. A.2 | QC: Inspection item |

Amphenol LTW
安費諾亮泰企業股份有限公司

| | | |
|---|---|---|
| ITEM NO | DRAWN BY: Vicky | DATE: 2024-01-02 |
| DWG NO: B CBD-XXAFFM-QL8FXX | CHECKED BY: Rita | DATE: 2024-01-02 |
| CUSTOMER: ALTW | APPROVED BY: Fred | DATE: 2024-01-02 |

W10814-03-RW01A2

THIS DOCUMENT IS SUBJECT TO CHANGE WITHOUT NOTICE. IT IS CONFIDENTIAL AND A PROPERTY OF Amphenol LTW. DISCLOSURE TO THIRD PARTY HAS TO BE AUTHORIZED BY Amphenol LTW.