REV.	ECN NO.	DATE	SIGN	DESCRIPTION
A	Initial Release	2013/09/12	Vicky	Old Item No. CAP-WTAMMSBI
B	C230202	2023/02/16	Vicky	△B X2

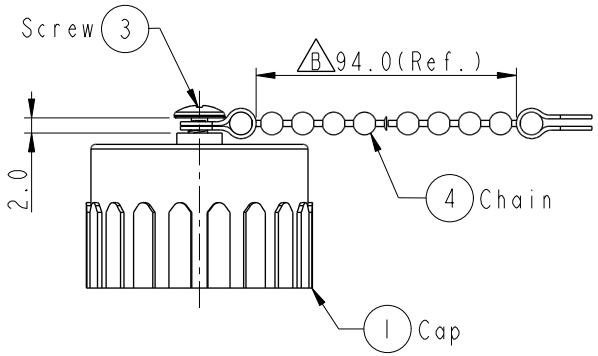

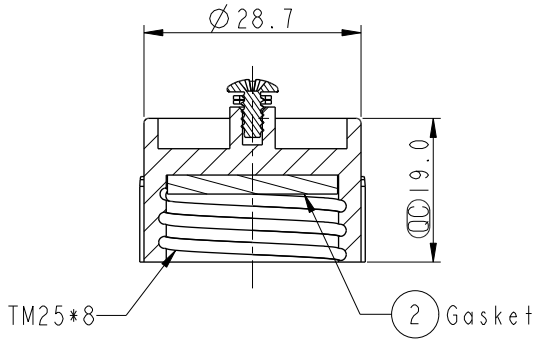

Section A-A

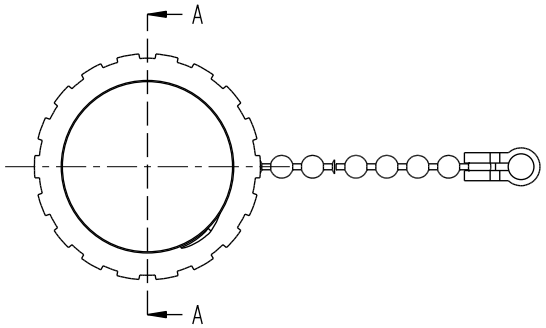

Note:
* QC Important Dimension.
* Waterproof Rate: IP67
* Cap: Nylon+GF, Black
* Gasket: EPDM, Black
* Screw is not allowed to tight(Chain be revolve)
不可將螺絲鎖緊,(鏈條要可旋轉)

UNIT: mm

TOLERANCE
.X ±0.25
.XX ±0.1
.XXX ±0.05
ANGLES ±1°

TITLE	ACC, PWR, WP CAP SCREW, W/ME CHAIN △B		
SCALE 1:1	SIZE A4	SHEET 1 OF 1	
REV. B	WC-REV. A.1	QC: Inspection item	

Amphenol LTW
安費諾亮泰企業股份有限公司

ITEM NO CAP-WTAMSPBI	DRAWN BY Vicky	DATE 2013-09-12
DWG NO CAP-WTAMSPBI	CHECKED BY Sam	DATE 2013-09-12
CUSTOMER ALTW	APPROVED BY Rita	DATE 2013-09-12

W10814-03-RW01A2

THIS DOCUMENT IS SUBJECT TO CHANGE WITHOUT NOTICE. IT IS CONFIDENTIAL AND A PROPERTY OF Amphenol LTW. DISCLOSURE TO THIRD PARTY HAS TO BE AUTHORIZED BY Amphenol LTW.