PART NO.	A79286-001	REV	ECO	DATE	APP
		C	101657	05-28-15	TLM

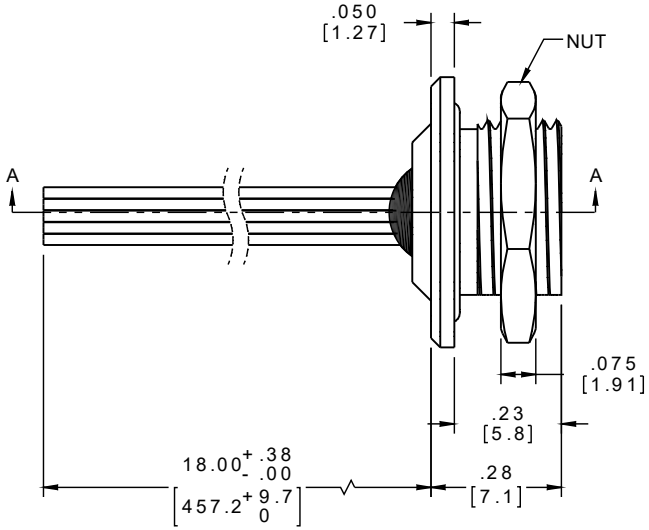

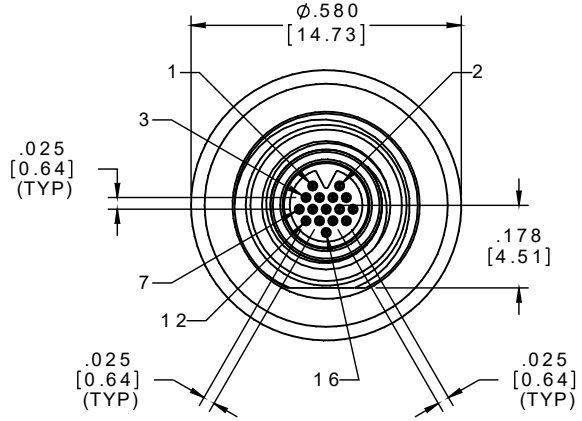

VIEW LESS NUT

ACTUAL SIZE
EXCLUDING WIRE LENGTH

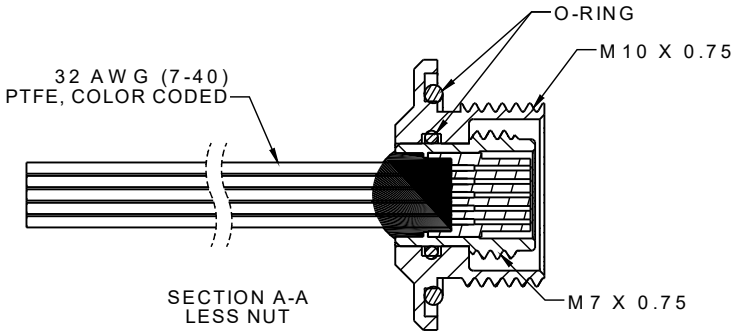

SECTION A-A
LESS NUT

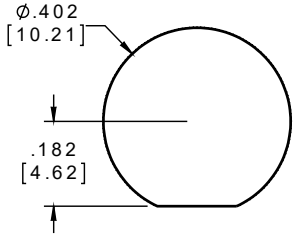

SUGGESTED
PANEL OPENING

PIN #	COLOR
1, 11	BLACK
2, 12	BROWN
3, 13	RED
4, 14	ORANGE
5, 15	YELLOW
6, 16	GREEN
7	BLUE
8	VIOLET
9	GRAY
10	WHITE

INTERNAL USE ONLY
USE MFG LOADING
PROCEDURE NC-16P

IP68

NOTE:

DIMENSIONS IN [ ] ARE IN MILLIMETERS UNLESS OTHERWISE NOTED AND ARE FOR REFERENCE ONLY

MNCP / SLDW

THIRD ANGLE
-TOLERANCES-
UNLESS OTHERWISE NOTED
DIMENSIONS IN INCHES
2 PL DEC ± .01
3 PL DEC ± .005
4 PL DEC ± .0005
ANGLES ± 1°

THIS DRAWING CONTAINS CONFIDENTIAL AND PROPRIETARY INFORMATION WHICH IS THE PROPERTY OF OMNETICS CONNECTOR CORP. THIS DOCUMENT MAY NOT, IN WHOLE OR IN PART, BE DUPLICATED, OR DISCLOSED FOR ANY PURPOSE, WITHOUT WRITTEN PERMISSION FROM OMNETICS CONNECTOR CORP.

DFTM. NJS	DATE 01-24-12	TITLE: (16) PIN MALE NANO THREADED PANEL MOUNT SEALED CIRCULAR CONNECTOR
CHK'D.	DATE	
APP'D.	DATE	

OMNETICS CONNECTOR CORPORATION
7260 COMMERCE CIRCLE EAST
MINNEAPOLIS, MN 55432
WWW.OMNETICS.COM

CAGE CODE 61873
DWG NO. A79286-001
SHEET 1 OF 2
REV C
SCALE: 3:1