PRODUCT NEWS

Correction Reissue

Product Discontinuation Notice

Programmable Controllers

OMRON

Issue Date
March, 2023

No. 2022041CE

Discontinuation Notice of Serial Communication Unit, Model CJ1W-SCU[]1-V1.

Product Discontinuation		Recommended Replacement
Serial communication unit **Model CJ1W-SCU[]1-V1**	→	Serial communication unit **Model CJ1W-SCU[]2**

[Final order entry date]

16 September, 2022

[Date of The Last Shipping]

The end of December, 2023

[Scheduled date of maintenance close]

The end of March, 2030

[Caution on recommended replacement]

Replacement of PLC series requires design change works. (Unit setting, wiring and so on).

[Difference from discontinued product]

Recommended replacement Model	Body Color	Dimen-sions	Wire connection	Mounting Dimensions	Charac-teristics	Operation ratings	Operation methods
CJ1W-SCU[]2	**	**	*	**	*	**	*

** : Compatible
* : The change is a little/Almost compatible
-- : Not compatible
- : No corresponding specification

[Product Discontinuation and recommended replacement]

Product discontinuation	Recommended replacement
CJ1W-SCU21-V1	CJ1W-SCU22
CJ1W-SCU31-V1	CJ1W-SCU32
CJ1W-SCU41-V1	CJ1W-SCU42

[Wire connection]

Product discontinuation Model CJ1W-SCU[]1-V1	Recommendable replacement Model CJ1W-SCU[]2
CJ1W-SCU21-V1 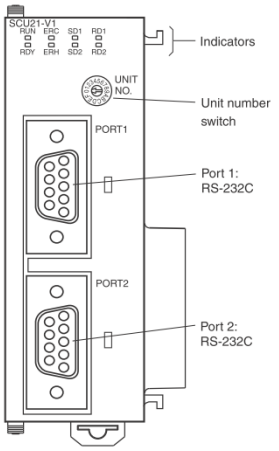 	**CJ1W-SCU22** No change the wiring for port 1 and 2. 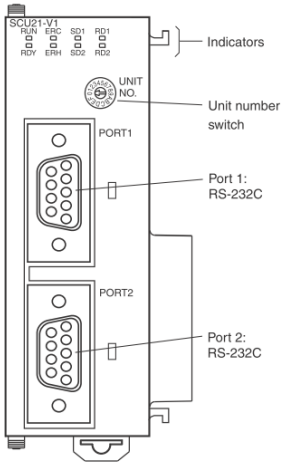
CJ1W-SCU31-V1 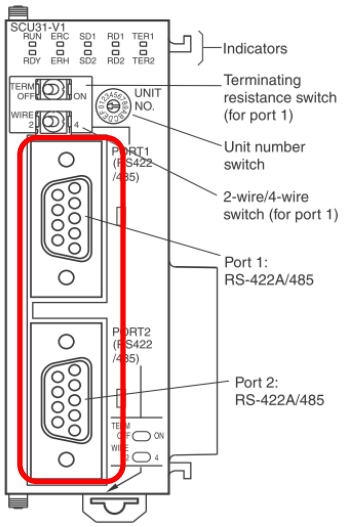 	**CJ1W-SCU32** Please change the wiring for port 1 and 2. 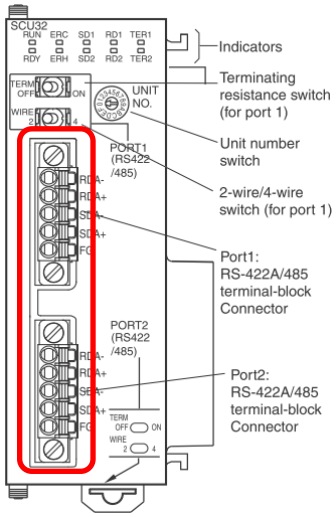
CJ1W-SCU41-V1 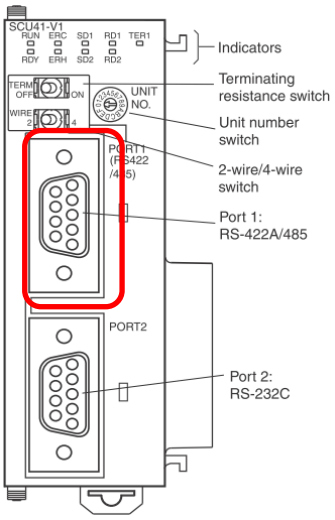 	**CJ1W-SCU42** Please change the wiring for port1. 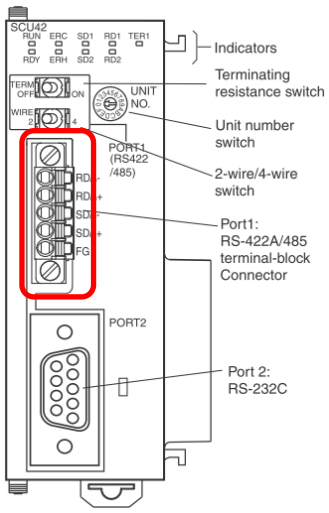

[Wire connection]

Product discontinuation Model CJ1W-SCU[]1-V1	Recommendable replacement Model CJ1W-SCU[]2

Connector Pin Layout for RS-422A/485 port
CJ1W-SCU31-V1 Port1,2/CJ1W-SCU41-V1 Port1

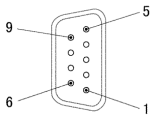

Pin	Abbreviation	Signal name	I/O
1	SDA	Send data -	Output
2	SDB	Send data +	Output
3	NC	Unused	---
4	NC	Unused	---
5	NC	Unused	---
6	RDA	Receive data -	Input
7	NC	Unused	---
8	RDB	Receive data +	Input
9	NC	Unused	---
Hood	FG	Shield	---

Connector Pin Layout for RS-422A/485 port
CJ1W-SCU32 Port1,2/CJ1W-SCU42 Port1

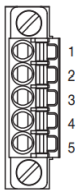

Pin No.	Symbol	Signal name	I/O
1	RDA	Receive data –	Input
2	RDB	Receive data +	Input
3	SDA	Send data –	Output
4	SDB	Send data +	Output
5	FG	Shield	---

[Characteristics]

Item	Product discontinuation Model CJ1W-SCU[]1-V1	Recommendable replacement Model CJ1W-SCU[]2
Baud rate	1200/2400/4800/9600/19200/38400 /57600/115200 bps	1200/2400/4800/9600/19200/38400 /57600/115200/230400 bps
Current consumption	SCU21:280mA + x SCU31:380mA SCU41:380mA + x	SCU22:280mA + x SCU32:400mA SCU42:360mA + x
Weight	SCU21:110g max SCU31:110g max SCU41: 110g max	SCU22:160g max SCU32:120g max SCU42:140g max

Note The current consumption is for one Serial Communications Board or Unit.
When an NT-AL001-E Link Adapter is connected to the Serial Communications Unit, power is supplied to the Link Adapter from the Board or Unit.
A current consumption of 150 mA must be added for each Link Adapter that is connected.
In the above specifications, “x” indicates that 150 mA must be added for each port to which an NT-AL001-E Link Adapter is connected to provide the required 5-V power supply.

Specifications and prices in this product news are as of the issue date and are subject to change without notice.
Only main changes in specifications are described in this document. Please be sure to read the relevant catalogs, datasheets, product specifications, instructions, and manuals for precautions and necessary information when using products.