Auf dem Schüffel 1
D-58513 Lüdenscheid
Tel.: +49-2351 - 5542-00
Fax +49 (2351) 554-861
info@assmann-wsw.com
www.assmann-wsw.com

PRODUCT CHANGE NOTIFICATION (PCN)

ISSUE DATE: 9/5/2022
MODIFICATION / REVISION DATE: 9/5/2022

AMJE0909-0300-YEB-24
MODULAR CABLE

CHANGE NOTIFICATION: PCN 20220509_AMJE0909-0300-YEB-24

DESCRIPTION OF CHANGES:
CHANGE OF DATA SHEET
CHANGE OF DATA SHEET
New Draw.-No. ASS_7945_CArev02

REASON FOR CHANGE:
CHANGE OF PRODUCT LOCATION
CHANGE OF PRODUCT LOCATION

KEY CHARACTERISTICS OF CHANGE: Details see page 3

PRODUCTS AFFECTED: AMJE0909-0300-YEB-24

DATE OF CHANGE AND IMPLEMENTATION:
CHANGE: WEEK 20 / YEAR 2022
IMPLEMENTATION: 09/05/22

RESPONSE: NO RESPONSE TO THIS NOTIFICATION IS REQUIRED

PCN REVISION HISTORY:
DATE OF REVISION: 9/5/2022 REVISION NUMBER: 00

Auf dem Schüffel 1
D-58513 Lüdenscheid
Tel.: +49-2351 - 554-200
Fax +49 (2351) 554-861
info@assmann-wsw.com
www.assmann-wsw.com

PRODUCT CHANGE NOTIFICATION (PCN)

ISSUE DATE: 9/5/2022
MODIFICATION / REVISION DATE: 9/5/2022

AMJE0909-0300-YEB-24
DOCUMENT: DRAWING

ASSMANN WSW P/N	Drawing Number		ASSMANN WSW P/N	Drawing Number
AMJE0909-0300-YEB-24	ASS_7945_CArev01	↔	AMJE0909-0300-YEB-24	ASS_7945_CArev02

PCN REVISION HISTORY:
DATE OF REVISION: 9/5/2022 REVISION NUMBER: 00

Auf dem Schüffel 1
D-58513 Lüdenscheid
Tel.: +49-2351 - 554-200
Fax +49 (2351) 554-861
info@assmann-wsw.com
www.assmann-wsw.com

PRODUCT CHANGE NOTIFICATION (PCN)

ISSUE DATE: 9/5/2022
MODIFICATION / REVISION DATE: 9/5/2022

AMJE0909-0300-YEB-24 OLD VERSION

Apprearance

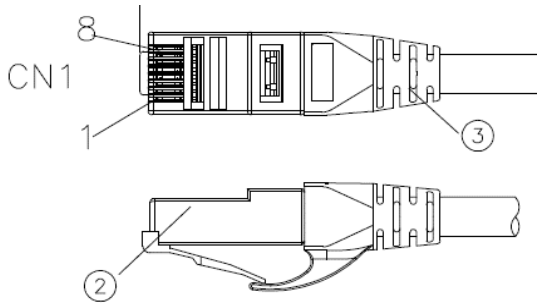

BOM

③	Molding	PVC 45P Color: see order code	NA	KG
②	CONNECTOR	RJ45 8P8C two fork Short type 3u" gold plated	2	PCS
①	CABLE	CAT6 UTP (24AWG*1PR)*4+PVC OD=5.8±0.3MM Color: see order code	NA	MM
NO:	NAME	DESCRIPTION	Q'TY	UNIT

AMJE0909-0300-YEB-24 NEW VERSION

Apprearance

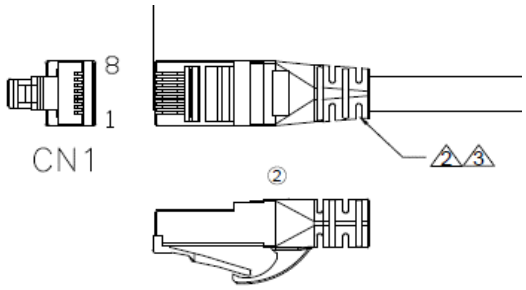

BOM

3	Molding	PVC 65P Color: see order code ②	NA	KG
2	CONNECTOR	RJ45 8P8C PLUG 3u" gold plated ②	2	PCS
1	CABLE	CAT6 U/UTP (24AWG*1PR)*4+Cross+PVC Jacket OD=5.8± 0.3MM Color: see order code ②	NA	MM
NO:	NAME	DESCRIPTION	Q'TY	UNIT

FOR DETAIL, PLEASE TAKE ATTACHED NEW DRAWING: FOR REFERENCE

PCN REVISION HISTORY:
DATE OF REVISION: 9/5/2022 REVISION NUMBER: 00

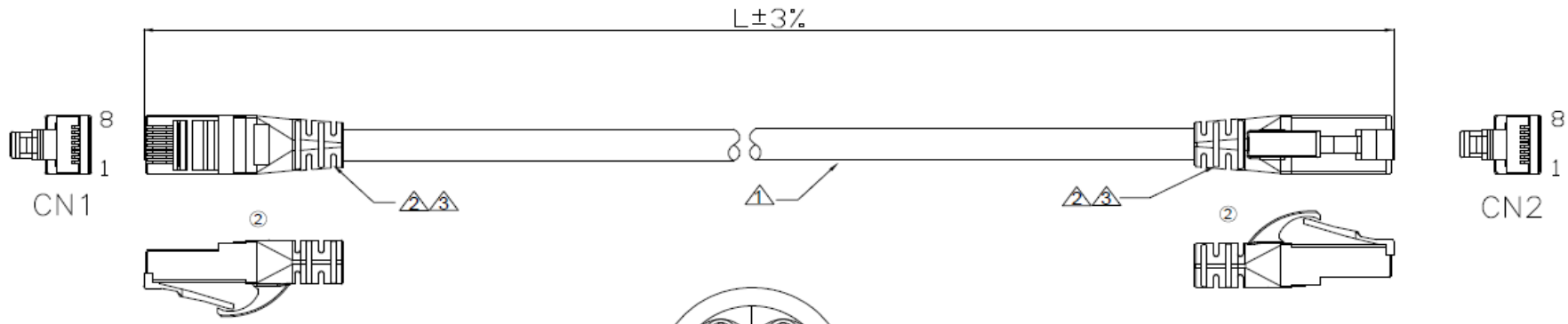

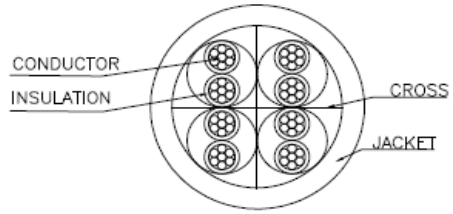

PIN OUT

CN1	WIRE COLOR	CN2
1	ORANGE/WHITE	1
2	ORANGE	2
3	GREEN/WHITE	3
6	GREEN	6
4	BLUE	4
5	BLUE/WHITE	5
7	BROWN/WHITE	7
8	BROWN	8

Electrical test:
Open/short/intermitence: 100%

NO:	NAME	DESCRIPTION	Q'TY	UNIT
3	Molding	PVC 65P Color: see order code ②	NA	KG
2	CONNECTOR	RJ45 8P8C PLUG 3u" gold plated ②	2	PCS
1	CABLE	CAT6 U/UTP (24AWG*1PR)*4+Cross+PVC Jacket OD=5.8± 0.3MM Color: see order code ②	NA	MM

WSW order code
AMJE0909-xxxx-xxB-24①

Cable length
0030: 0.3M
0050: 0.5M
0100: 1.0M
0150: 1.5M
0200: 2.0M
0300: 3.0M
0500: 5.0M
0700: 7.0M
1000: 10M
1500: 15M

Cable&Molding color
BK: Black
RD: Red
YE: Yellow
GN: Green
GY: Grey
BU: Blue
WH: White
BN: Brown

RoHS compliant
Unit: mm

Scale	Free
TOLERANCE	
DIM	TOL
Angle	TOL

Id.	Modification	Date	Name
②	Change the plant	09.05.2022	Luca
①	Update the WSW order code	02.06.2017	Amy
⓪	Drawn	30.03.2017	Amy

	Date	Name
Drawn	30.03.2017	Amy
Approved	09.05.2022	Luca

ASSMANN WSW components

Customer-No.

ASSMANN WSW-No.
①AMJE0909-xxxx-xxB-24

Drawing-No.
ASS 7945 CA

rev02

Replace

Sheet