Auf dem Schüffel 1
D-58513 Lüdenscheid
Tel.: +49-2351 - 5542-00
Fax +49 (2351) 554-861
info@assmann-wsw.com
www.assmann-wsw.com

PRODUCT CHANGE NOTIFICATION (PCN)

ISSUE DATE: 25/4/2022
MODIFICATION / REVISION DATE: 25/4/2022

A-MCSP-80050
MODULAR CABLE

CHANGE NOTIFICATION: PCN 20220425_A-MCSP-80050

DESCRIPTION OF CHANGES:
CHANGE OF DATA SHEET
CHANGE OF DATA SHEET
New Draw.-No. ASS_7425_CArev07

REASON FOR CHANGE:
CHANGE OF PRODUCT LOCATION
CHANGE OF PRODUCT LOCATION

KEY CHARACTERISTICS OF CHANGE: Details see page 3

PRODUCTS AFFECTED: A-MCSP-80050

DATE OF CHANGE AND IMPLEMENTATION:
CHANGE: WEEK 18 / YEAR 2022
IMPLEMENTATION: 25/4/2022

RESPONSE: NO RESPONSE TO THIS NOTIFICATION IS REQUIRED

PCN REVISION HISTORY:
DATE OF REVISION: 25/4/2022 REVISION NUMBER: 00

Auf dem Schüffel 1
D-58513 Lüdenscheid
Tel.: +49-2351 - 554-200
Fax +49 (2351) 554-861
info@assmann-wsw.com
www.assmann-wsw.com

PRODUCT CHANGE NOTIFICATION (PCN)

ISSUE DATE: 25/4/2022
MODIFICATION / REVISION DATE: 25/4/2022

REFERENCE DOCUMENTS / ATTACHMENTS:
DOCUMENT: DRAWING

ASSMANN WSW P/N	Drawing Number		ASSMANN WSW P/N	Drawing Number
A-MCSP-80050	ASS_7425_CArev06	↔	A-MCSP-80050	ASS_7425_CArev07

PCN REVISION HISTORY:
DATE OF REVISION: 25/4/2022 REVISION NUMBER: 00

Auf dem Schüffel 1
D-58513 Lüdenscheid
Tel.: +49-2351 - 554-200
Fax +49 (2351) 554-861
info@assmann-wsw.com
www.assmann-wsw.com

PRODUCT CHANGE NOTIFICATION (PCN)

ISSUE DATE: 25/4/2022
MODIFICATION / REVISION DATE: 25/4/2022

A-MCSP-80050 OLD VERSION

Apprearance

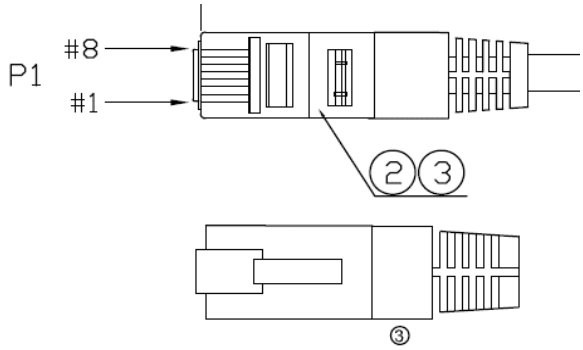

BOM

	NO	PART NO	DESCRIPTION	QTY	UNIT
	3	mold	PVC,50P	9.0	G
	2	plug	8P8C plating gold 3U" with metal shield	2	PCS
⑤	1	cable	FTP (26AWG*1P)*4+D+A+PVC, OD:5.2±0.2mm CAT5E	2.0	M

A-MCSP-80050 NEW VERSION

Apprearance

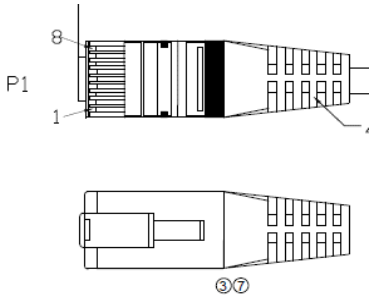

BOM

	NO	PART NO	DESCRIPTION	QTY	UNIT
⑦	4	AL-Foil	Double-sided conductive aluminum foil	2	PCS
⑦	3	mold	PVC,65P	AR	G
	2	plug	8P8C plating gold 3U" with metal shield	2	PCS
⑦⑤	1	cable	CAT5E F/UTP (26AWG*1P)*4+D+A+PVC, OD:5.2±0.2mm	AR	M

FOR DETAIL, PLEASE TAKE ATTACHED NEW DRAWING: FOR REFERENCE

PCN REVISION HISTORY:
DATE OF REVISION: 25/4/2022 REVISION NUMBER: 00

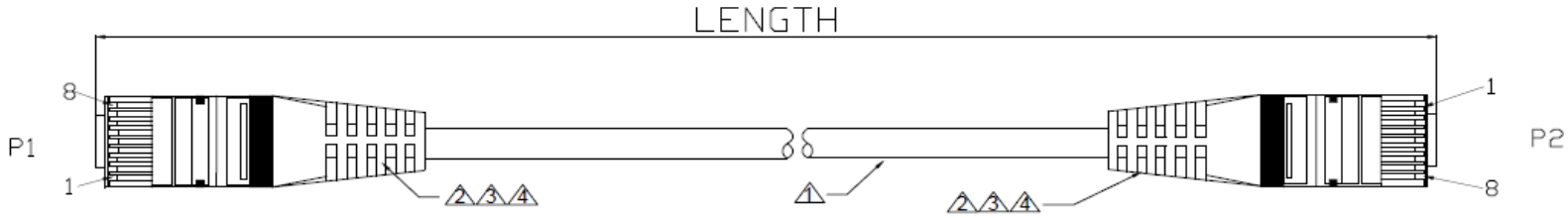

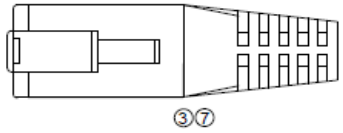

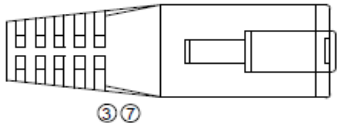

Order Code:

① A-MCSP-80XXX : color Grey

④② Order lengths in meter:
0.3,0.5,1,2,3,5,7,10,15,20,30

A-MCSP-80XXX/X

④② Order lengths in meter:
0.3,0.5,1,2,3,5,7,10,15,20,30

Order color:(R)Red,(Y)Yellow
(G)Green,(B)Blue

⑥② TOLERANCE

Length(meter)	Max-M	Min-M
0.3	+0.03	-0.025
0.5	+0.03	-0.025
1	+0.04	-0.035
2	+0.06	-0.06
3	+0.09	-0.09
5	+0.15	-0.15
7	+0.21	-0.21
10	+0.3	-0.3
15	+0.45	-0.45
20	+0.6	-0.6
30	+0.9	-0.9

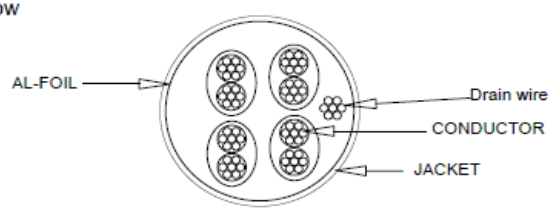

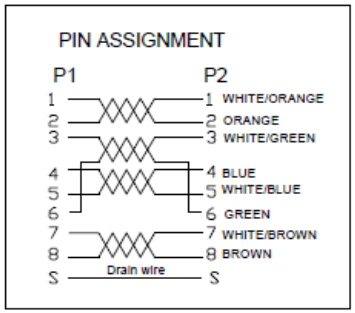

Electrical
100% short,open,miswire test

	NO	PART NO	DESCRIPTION	QTY	UNIT
⑦	4	AL-Foil	Double-sided conductive aluminum foil	2	PCS
⑦	3	mold	PVC,65P	AR	G
	2	plug	8P8C plating gold 3U" with metal shield	2	PCS
⑦⑤	1	cable	CAT5E F/UTP (26AWG*1P)*4+D+A+PVC, OD:5.2±0.2mm	AR	M

RoHS compliant
Unit:: mm

Scale	FREE	⑦	Change the plant	12.04.2022	Luca		Date	Name
TOLERANCE		⑥	Clarify the tolerance	23.08.2018	Segal	Drawn	26.06.2015	Joanna
X.	±X	⑤	Add "CAT5E"	20.10.2017	Stephon	Approved	12.04.2022	Luca
X.X	±X	④	Add length for 20M and 30M	20.09.2017	Fred			
X.XX	±X	③	remove mark on the mould	29.06.2016	Joanna			
DIM	TOL	②	Add length for 300mm	18.05.2015	Joanna			
ANGLE	±X°							
Angle	TOL	Id.	Modification	Date	Name			

ASSMANN WSW components

Customer-No.

ASSMANN WSW-No.
A-MCSP-80XXX/X

Drawing-No.
ASS 7425 CA

rev07

Replace

Sheet

CAB0507