Diplomat 8928

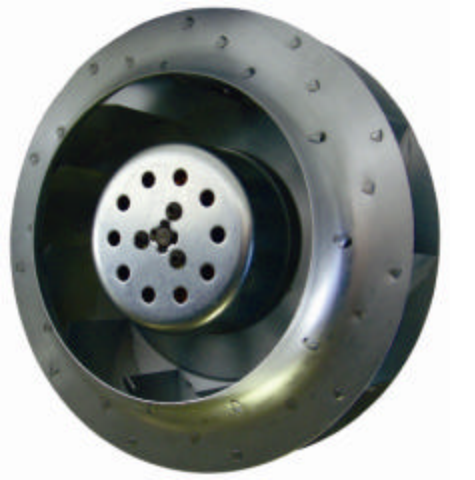

MECHANICAL DRAWING

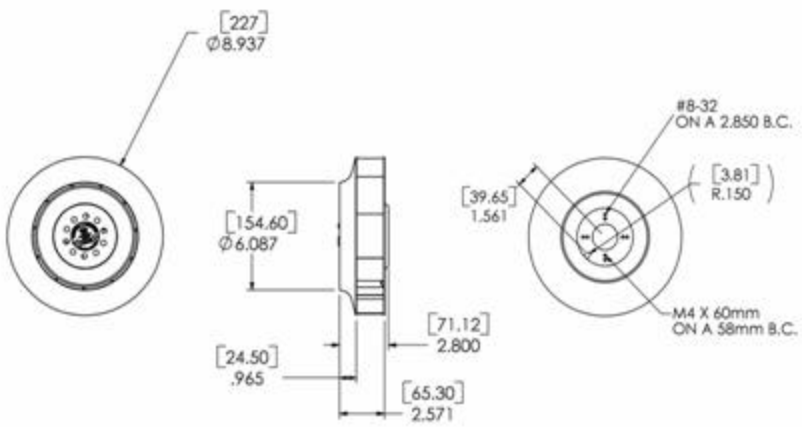

227 X 71 mm

STANDARD FEATURES

- Size: 227 mm x 71.1 mm deep (8.94" x 2.80")
- Operating Temperature: -10°C to +70°C
- Storage Temperature: -40°C to +85°C
- Dual Ball Bearings
- Impeller: Galvanized Metal
- Termination: Lead Wires

BENEFITS

- Outstanding CFM Performance in High Pressure Systems
- Dependability with an 18 Month Warranty
- Extended Bearing Life
- Soft Start Capability
- Available Tachometer & PWM (Standard with the E-Series)

PERFORMANCE GRAPH

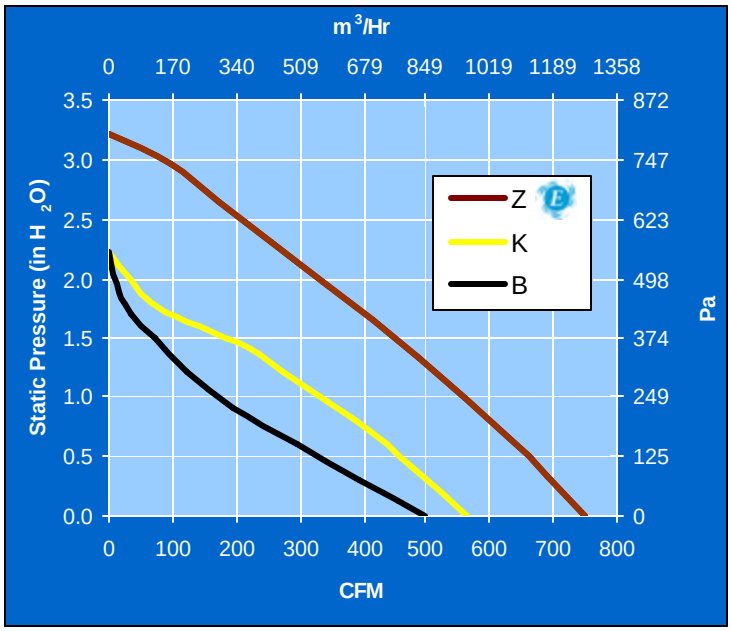

Model Number	Rated Voltage	Operating Voltage Range	Rated Current	Rated Input Power	Speed	Rated Airflow		Rated Air Pressure		Noise
	VDC	VDC	Amps	Watts	RPM	CFM	m³/Hr	in H_2O	Pa	dBA
DD892824B	24	16 - 32	2.7	64	2650	500	849	2.2	548	69.1
DD892848B	48	28 - 72	1.4	67	2650	500	849	2.2	548	69.1
DD892824K	24	16 - 32	4.1	98	2800	565	959	2.9	722	71.7
DD892848K	48	28 - 72	2.0	98	2800	565	959	2.9	722	71.7
DDE892824Z	24	16 - 32	6.2	149	3550	750	1274	3.2	797	78.7
DDE892848Z	48	28 - 72	3.0	149	3550	750	1274	3.2	797	78.7

= Products developed with new E-Series technology delivering higher performance, efficiency, and expanded feature sets.

COMAIR ROTRON, INC
8929 Terman Court, San Diego, CA 92121
Ph (858) 348-6200 Fax (858) 566-4577
E-mail: sales@comairrotron.com,
Web: www.comairrotron.com

approvals pending