THIS DRAWING IS UNPUBLISHED. RELEASED FOR PUBLICATION -,- .
© COPYRIGHT - By - ALL RIGHTS RESERVED.

LOC	DIST
AF	50

REVISIONS

P	LTR	DESCRIPTION	DATE	DWN	APVD
	L1	REVISED PER ECR-20-009164	14AUG2020	MK	DH

1 CONTINUOUS STRIP ON REELS

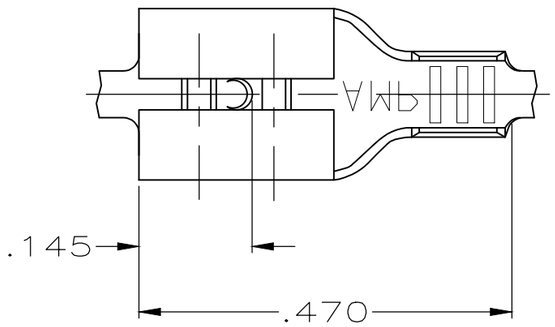

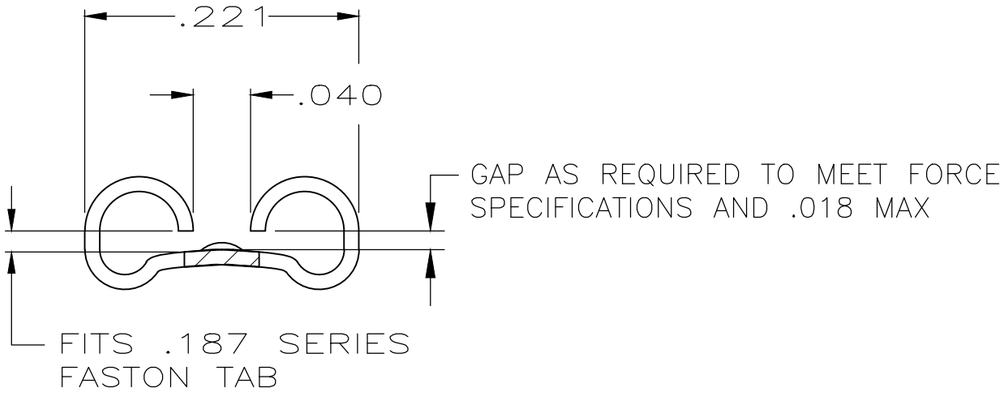

VIEW A—A
SCALE 8:1

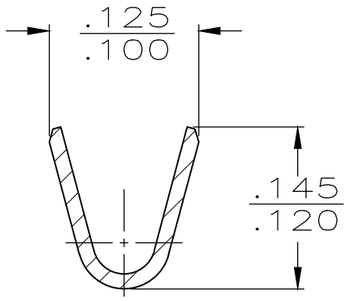

SECTION B—B
SCALE 8:1

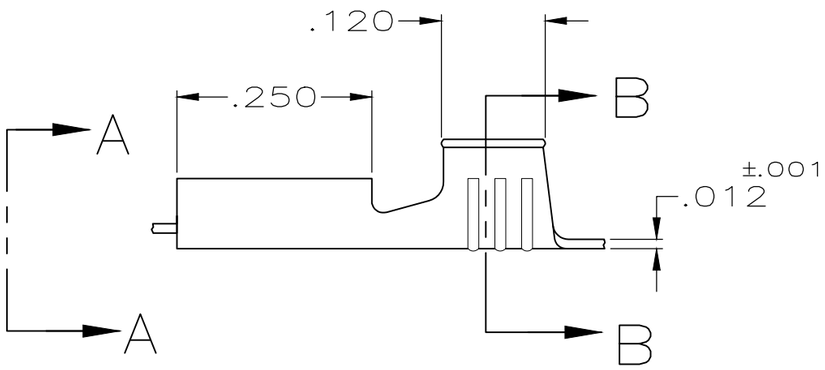

	FINISH	MATERIAL	WIRE SIZE	MATING TAB THK	PART NUMBER
	NICKEL	#2H STEEL	20-16	.021-.019	42373-3
	TIN	BRASS	20-16	.021-.019	42373-2
OBSOLETE	—	#4H BRASS	20-16	.020	~~42373-1~~

.188	F	.090	.060	16
			.053	18
			.049	20
STRIP LENGTH ±.015	TYPE	WIDTH	±.002 HEIGHT	WIRE

WIRE BARREL CRIMP

THIS DRAWING IS A CONTROLLED DOCUMENT.

DIMENSIONS: INCHES

TOLERANCES UNLESS OTHERWISE SPECIFIED:

0 PLC	± -
1 PLC	± -
2 PLC	± -
3 PLC	± .015
4 PLC	± -
ANGLES	± -

MATERIAL: SEE TABLE

FINISH: SEE TABLE

DWN	JR RUTH	7/14/89
CHK	MS FEHER	7/14/89
APVD	C MEYERS	7/14/89
PRODUCT SPEC	—	
APPLICATION SPEC	—	
WEIGHT	—	

TE Connectivity

NAME: RECEPTACLE, FASTON™ .187 SERIES —

SIZE	CAGE CODE	DRAWING NO	RESTRICTED TO
A3	00779	C-42373	—

CUSTOMER DRAWING

SCALE	SHEET	REV
5:1	1 OF 1	L1