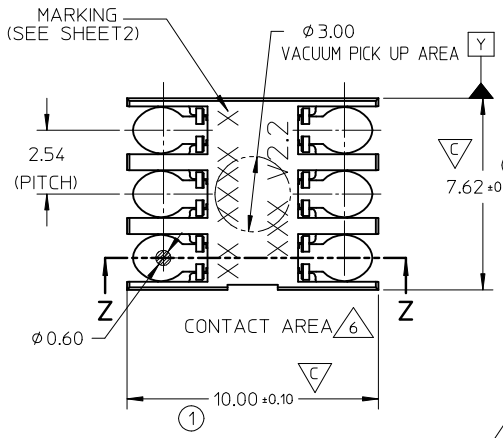


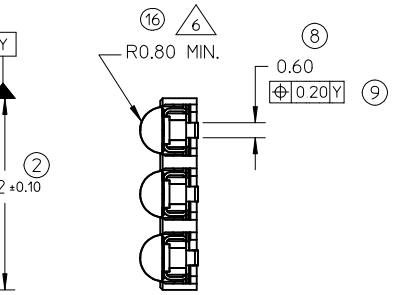


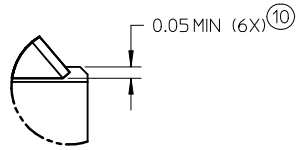


DETAIL2

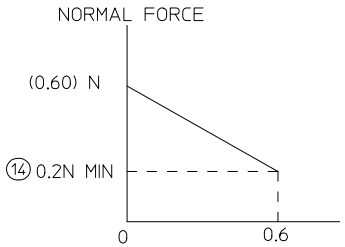


NORMAL FORCE CURVE
(AFTER 3X REFLOW)

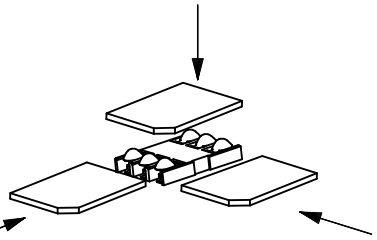

CARD INSERTION DIRECTION
(3 AXES CAPABLE)

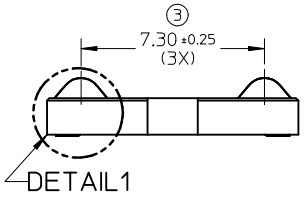


DETAIL1

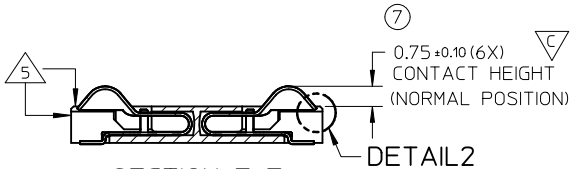


SECTION Z-Z

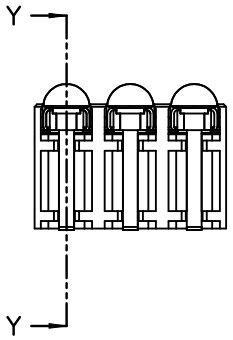


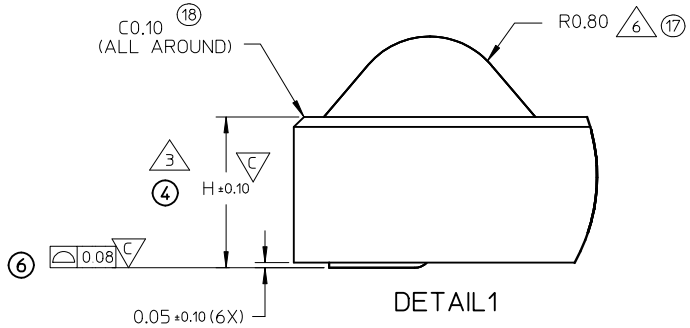


DETAIL1

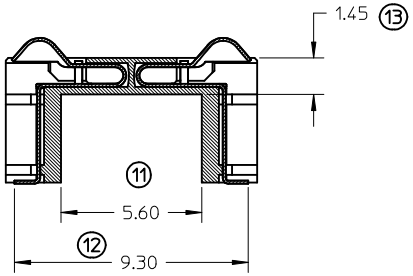


SECTION Y-Y

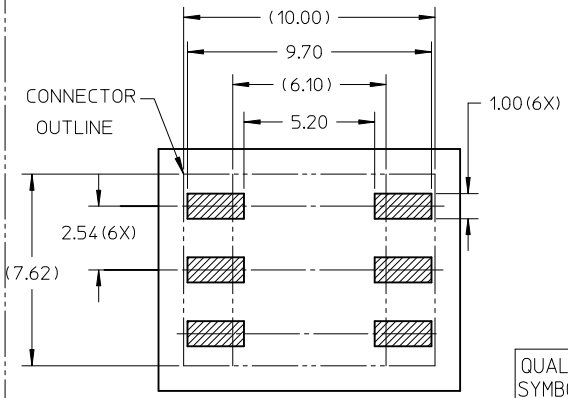


RECOMMENDED PCB LAYOUT
(TOLERANCE ±0.05)

| QUALITY SYMBOLS | |
|---|---|
| ▼ | =0 |
| ▽C | =5 |

NOTEs:

1 MATERIAL:

1-1 HOUSING : LCP 30% GLASS FILL, UL94 V-0,COLOR BLACK

15 1-2 TEMINAL : PHOSPHOR BRONZE 0.12MM REF THICKNESS

2 PLATING:TERMINAL:

2-1 SIM SIDE (CONTACT AREA): 0.38 MICROMETER MIN GOLD

2-1 SOLDER TAIL : GOLD FLASH 0.05 MICROMETER MIN

2-3 UNDERPLATING : 2 MICROMETER NICKEL OVERALL

3 H DIMENSION MINIMUM=1.50,MAXMIMUM=5.00(SEE CHART ON SHEET2)

4 NO SHARP EDGES INTERFACING WITH THE PCB OR SIM CARD

5 CONTACT MUST NOT EXTENDED BEYOND HOUSING EDGE DURING DEFLECTION AND MUST LOWER THAN HOUSING LEVEL AFTER 3 TIMES REFLOW

6 MAINTAIN IN CONTACT AREA

| | | | |
|---|---|---|---|
| 0.08 COPLANRITY | 2011/04/12 | | |
| EC NO: S2011-0879 | 2011/04/25 | | |
| DRWN:KHLIM | 2011/06/03 | | |
| CHKD:JTANO2 | | | |
| APPR:SKTOH | | | |
| B1 | | DESCRIPTION | REV |

| QUALITY SYMBOLS | |
|---|---|
| FA | =0 |
| FC | =0 |
| FP | =0 |

| GENERAL TOLERANCES (UNLESS SPECIFIED) | mm | INCH |
|---|---|---|
| 4 PLACES | ± --- | ± --- |
| 3 PLACES | ± --- | ± --- |
| 2 PLACES | ± 0.10 | ± --- |
| 1 PLACE | ± 0.2 | ± --- |
| ANGULAR ± 2 ° | | |

DRAFT WHERE APPLICABLE MUST REMAIN WITHIN DIMENSIONS

| | | | |
|---|---|---|---|
| DIMENSION STYLE: MM ONLY | SCALE: NTS | DESIGN UNITS: METRIC | THIRD ANGLE PROJECTION |
| DRAWN BY: KHLIM | DATE: 2009/12/18 | TITLE: 6 CKT SCALABLE SIM CONNECTOR | |
| CHECKED BY: JXYONG | DATE: 2010/01/07 | | |
| APPROVED BY: WFDENG | DATE: 2010/03/29 | MOLEX INCORPORATED | |
| MATERIAL NO.: SEE TABLE | | DOCUMENT NO.: SD-47019-002 | SHEET NO.: 1 OF 2 |
| SIZE: A3 | THIS DRAWING CONTAINS INFORMATION THAT IS PROPRIETARY TO MOLEX INCORPORATED AND SHOULD NOT BE USED WITHOUT WRITTEN PERMISSION | | |

tb_frame_A3_P_AM_T
Rev. F 2009/06/18

| PART NUMBER | DIM H |
|---|---|
| 470191502 | 1.5 |
| 470191602 | 1.6 |
| 470191702 | 1.7 |
| 470191802 | 1.8 |

| HEIGHT | YEAR | WEEK | DAY | LINE NO. | MOLEX LOGO | | |
|---|---|---|---|---|---|---|---|
| 15--50 | 0--9 | 01--52 | 1--7 | 1-- | MSH | MCH | MCD |
| Example 20 | Example 0-2010 | Example 13 | Example 1 | Example 2 | PRODUCE IN SHANGHAI | PRODUCE IN DONG GUAN | PRODUCE IN CHENG DU |

B PRODUCTION TOOL PART PRINTED DATE CODE

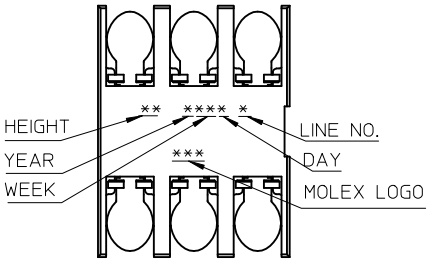


0.08 COPLANRITY
EC NO: S2011-0879 2011/04/12
DRWN:KHLIM 2011/04/25
CH'KD:JTAN02 2011/06/03
APPR:SKTOH
DESCRIPTION
B1
REV

QUALITY SYMBOLS
FA=0
FC=0
FP=0

GENERAL TOLERANCES (UNLESS SPECIFIED)

| | mm | INCH |
|---|---|---|
| 4 PLACES | ± --- | ± --- |
| 3 PLACES | ± --- | ± --- |
| 2 PLACES | ± 0.10 | ± --- |
| 1 PLACE | ± 0.2 | ± --- |
| ANGULAR ± 2 ° | | |

DRAFT WHERE APPLICABLE MUST REMAIN WITHIN DIMENSIONS

DIMENSION STYLE: MM ONLY
SCALE: NTS
DESIGN UNITS: METRIC
THIRD ANGLE PROJECTION

DRAWN BY: KHLIM DATE: 2009/12/18
CHECKED BY: JXYONG DATE: 2010/01/07
APPROVED BY: WFDENG DATE: 2010/03/29

TITLE: 6 CKT SCALABLE SIM CONNECTOR

molex MOLEX INCORPORATED

MATERIAL NO.: SEE TABLE
DOCUMENT NO.: SD-47019-002
SHEET NO.: 2 OF 2
SIZE: A3

THIS DRAWING CONTAINS INFORMATION THAT IS PROPRIETARY TO MOLEX INCORPORATED AND SHOULD NOT BE USED WITHOUT WRITTEN PERMISSION

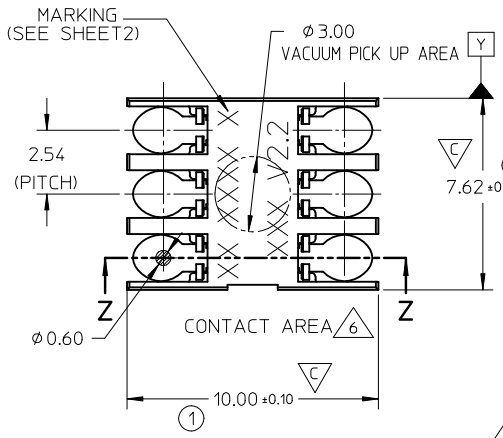


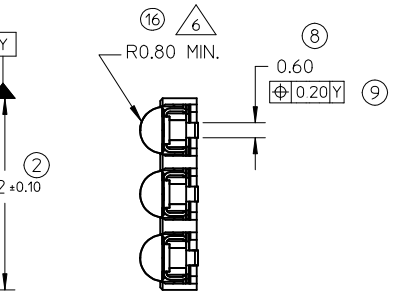


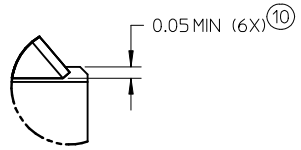


DETAIL2

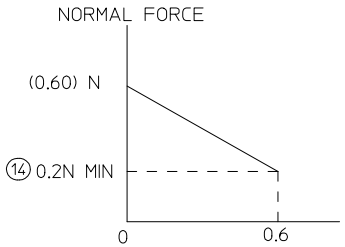


NORMAL FORCE CURVE
(AFTER 3X REFLOW)

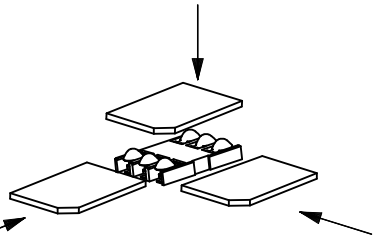

CARD INSERTION DIRECTION
(3 AXES CAPABLE)

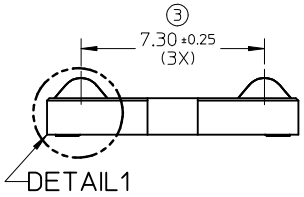


DETAIL1

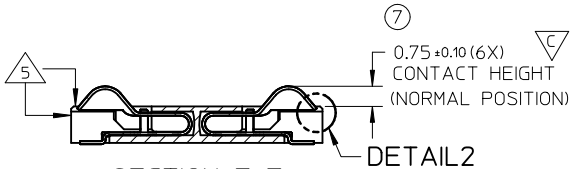


SECTION Z-Z

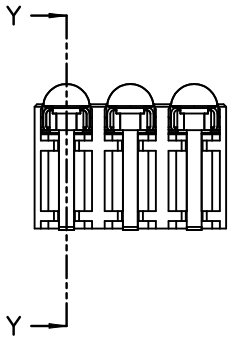


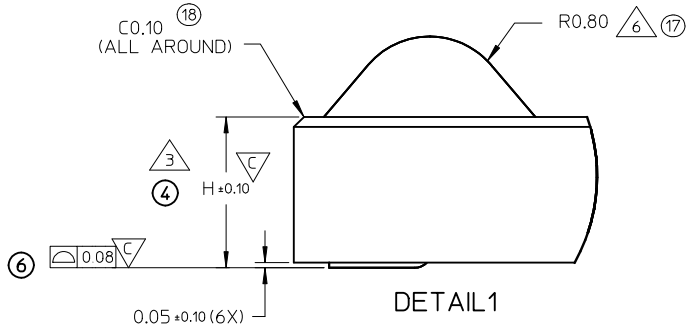


DETAIL1

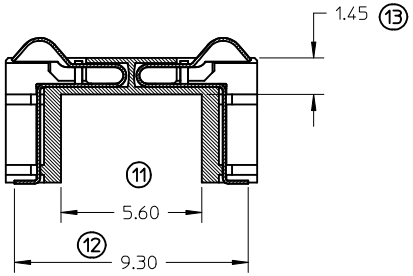


SECTION Y-Y

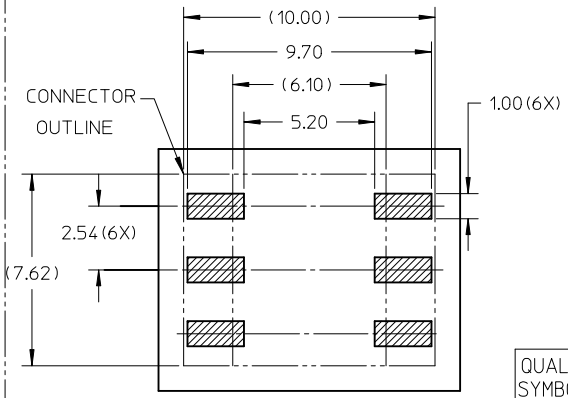


RECOMMENDED PCB LAYOUT
(TOLERANCE ±0.05)

| QUALITY SYMBOLS | |
|---|---|
| ▼ | =0 |
| ▽C | =5 |

NOTEs:

1 MATERIAL:

1-1 HOUSING : LCP 30% GLASS FILL, UL94 V-0,COLOR BLACK

15 1-2 TEMINAL : PHOSPHOR BRONZE 0.12MM REF THICKNESS

2 PLATING:TERMINAL:

2-1 SIM SIDE (CONTACT AREA): 0.38 MICROMETER MIN GOLD

2-1 SOLDER TAIL : GOLD FLASH 0.05 MICROMETER MIN

2-3 UNDERPLATING : 2 MICROMETER NICKEL OVERALL

3 H DIMENSION MINIMUM=1.50,MAXMIMUM=5.00(SEE CHART ON SHEET2)

4 NO SHARP EDGES INTERFACING WITH THE PCB OR SIM CARD

5 CONTACT MUST NOT EXTENDED BEYOND HOUSING EDGE DURING DEFLECTION AND MUST LOWER THAN HOUSING LEVEL AFTER 3 TIMES REFLOW

6 MAINTAIN IN CONTACT AREA

| | | | |
|---|---|---|---|
| 0.08 COPLANRITY | 2011/04/12 | | |
| EC NO: S2011-0879 | 2011/04/25 | | |
| DRWN:KHLIM | 2011/06/03 | | |
| CHKD:JTANO2 | | | |
| APPR:SKTOH | | | |
| B1 | | DESCRIPTION | REV |

| QUALITY SYMBOLS | |
|---|---|
| FA | =0 |
| FC | =0 |
| FP | =0 |

| GENERAL TOLERANCES (UNLESS SPECIFIED) | mm | INCH |
|---|---|---|
| 4 PLACES | ± --- | ± --- |
| 3 PLACES | ± --- | ± --- |
| 2 PLACES | ± 0.10 | ± --- |
| 1 PLACE | ± 0.2 | ± --- |
| ANGULAR ± 2 ° | | |

DRAFT WHERE APPLICABLE MUST REMAIN WITHIN DIMENSIONS

| | | | |
|---|---|---|---|
| DIMENSION STYLE: MM ONLY | SCALE: NTS | DESIGN UNITS: METRIC | THIRD ANGLE PROJECTION |
| DRAWN BY: KHLIM | DATE: 2009/12/18 | TITLE: 6 CKT SCALABLE SIM CONNECTOR | |
| CHECKED BY: JXYONG | DATE: 2010/01/07 | | |
| APPROVED BY: WFDENG | DATE: 2010/03/29 | MOLEX INCORPORATED | |
| MATERIAL NO.: SEE TABLE | | DOCUMENT NO.: SD-47019-002 | SHEET NO.: 1 OF 2 |
| SIZE: A3 | THIS DRAWING CONTAINS INFORMATION THAT IS PROPRIETARY TO MOLEX INCORPORATED AND SHOULD NOT BE USED WITHOUT WRITTEN PERMISSION | | |

tb_frame_A3_P_AM_T
Rev. F 2009/06/18

| PART NUMBER | DIM H |
|---|---|
| 470191502 | 1.5 |
| 470191602 | 1.6 |
| 470191702 | 1.7 |
| 470191802 | 1.8 |

| HEIGHT | YEAR | WEEK | DAY | LINE NO. | MOLEX LOGO | | |
|---|---|---|---|---|---|---|---|
| 15--50 | 0--9 | 01--52 | 1--7 | 1-- | MSH | MCH | MCD |
| Example 20 | Example 0-2010 | Example 13 | Example 1 | Example 2 | PRODUCE IN SHANGHAI | PRODUCE IN DONG GUAN | PRODUCE IN CHENG DU |

B PRODUCTION TOOL PART PRINTED DATE CODE

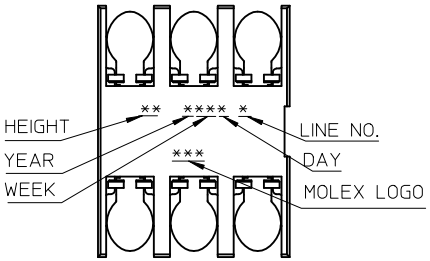


0.08 COPLANRITY
EC NO: S2011-0879 2011/04/12
DRWN:KHLIM 2011/04/25
CH'KD:JTAN02 2011/06/03
APPR:SKTOH
DESCRIPTION
B1
REV

QUALITY SYMBOLS
FA=0
FC=0
FP=0

GENERAL TOLERANCES (UNLESS SPECIFIED)

| | mm | INCH |
|---|---|---|
| 4 PLACES | ± --- | ± --- |
| 3 PLACES | ± --- | ± --- |
| 2 PLACES | ± 0.10 | ± --- |
| 1 PLACE | ± 0.2 | ± --- |
| ANGULAR ± 2 ° | | |

DRAFT WHERE APPLICABLE MUST REMAIN WITHIN DIMENSIONS

DIMENSION STYLE: MM ONLY
SCALE: NTS
DESIGN UNITS: METRIC
THIRD ANGLE PROJECTION

DRAWN BY: KHLIM DATE: 2009/12/18
CHECKED BY: JXYONG DATE: 2010/01/07
APPROVED BY: WFDENG DATE: 2010/03/29

TITLE: 6 CKT SCALABLE SIM CONNECTOR

molex MOLEX INCORPORATED

MATERIAL NO.: SEE TABLE
DOCUMENT NO.: SD-47019-002
SHEET NO.: 2 OF 2
SIZE: A3

THIS DRAWING CONTAINS INFORMATION THAT IS PROPRIETARY TO MOLEX INCORPORATED AND SHOULD NOT BE USED WITHOUT WRITTEN PERMISSION