REVISIONS					
REV	ECO	DESCRIPTION	DATE	BY	APPR
A3	-	RELEASE NEW DWG FORMAT	11DEC13	DRP	-
A4	C0540S	UPDATE DIMENSIONS	22JUL16	JONY	TOMMY
A5	-	ADD COLOR OPTION	23NOV20	LOUIE	TOMMY

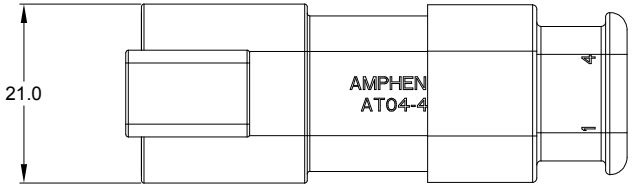

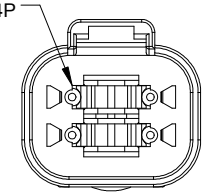

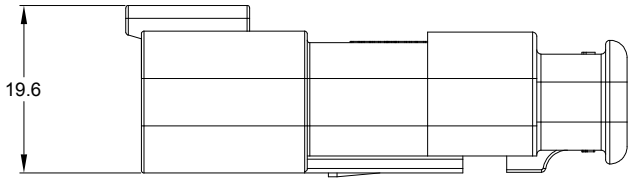

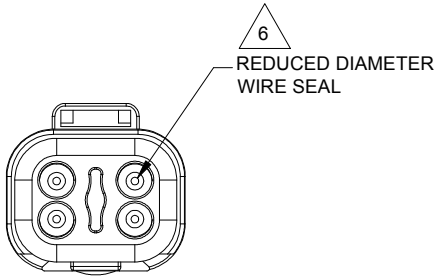

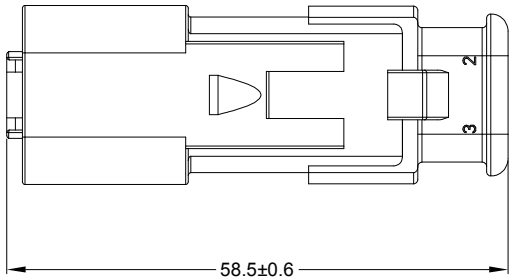

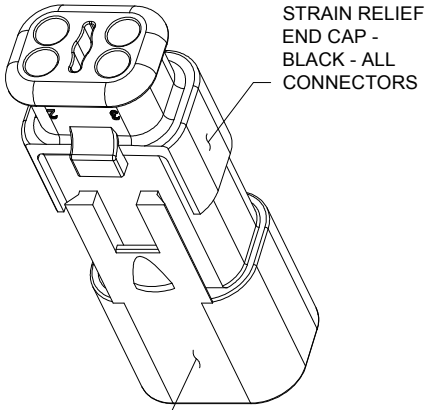

NOTES: UNLESS OTHERWISE SPECIFIED

1. MATERIAL:
   HOUSING: THERMOPLASTIC
   SEAL: SILICONE RUBBER

2. MODIFICATIONS: STRAIN RELIEF END CAP;
   REDUCED DIA. WIRE SEAL

3. SPECIFICATIONS:
   3.1 CURRENT RATING: 13 AMPS
   3.2 OPERATING TEMPERATURE: -55°C TO +125°C
   3.3 DIELECTRIC WITHSTANDING VOLTAGE: LESS THAN 2 MILLIAMPS CURRENT LEAKAGE @ 1500 VOLTS AC.
   3.4 INSULATION RESISTANCE: 1000 MEGOHMS MIN @ 25°C.
   3.5 MOISTURE RESISTANCE:
   IP68(1M OF WATER FOR A PERIOD OF 24 HOURS, MATED CONDITION)
   IP69K(MATED CONDITION)
   3.6 MATING CYCLE DURABILITY: 100 CYCLES
   3.7 RoHS COMPLIANT

4. MATING PART: AT06-4S* PLUG
   (* = MODIFICATIONS AND COLORS)

5. ALL DIMENSIONS ARE FOR REFERENCE USE ONLY.

6 CONTACT SIZE AND REAR SEAL WIRE RANGE:

CONTACT SIZE	MIN. INSUL O.D.	MAX. INSUL O.D.	TYPICAL WIRE RANGE
16	1.35 mm (.053 in)	3.05 mm (.120 in)	14 - 20 AWG (2.0-0.5mm²)

PART NUMBER CHART	
COLOR	PART NUMBER
GREY	AT04-4P-SR02GRY
BLACK	AT04-4P-SR02BLK
BLUE	AT04-4P-SR02BLU
BROWN	AT04-4P-SR02BRN
GREEN	AT04-4P-SR02GRN
RED	AT04-4P-SR02RED
WHITE	AT04-4P-SR02WHT
YELLOW	AT04-4P-SR02YEL
ORANGE	AT04-4P-SR02ORG

	SEE PART NUMBER CHART		
	PART NUMBER	DESCRIPTION	ITEM
QUANTITY	MATERIALS LIST		

UNLESS OTHERWISE SPECIFIED
1) All dimensions are in metric(mm).
2) Tolerances are as follows:
1 PL DEC ±0.30 | Fractions ±1/64
2 PL DEC ±0.15 | Angles ±1°
3 PL DEC ±0.08
3) Note reference = X

MATERIAL SPECIFICATIONS:

PROCESS SPECIFICATIONS:

NEXT ASS'Y:

SIGNATURES		DATE
DRAWN:	LOUIE	23NOV20
CHECKED:	ORION	25NOV20
ENGINEER:		
APPROVAL:	TOMMY	27NOV20
CUSTOMER:		

THIS DRAWING IS SUPPLIED FOR INFORMATION ONLY. DESIGN FEATURES, SPECIFICATIONS AND PERFORMANCE DATA SHOWN HEREON ARE THE PROPERTY OF THE AMPHENOL CORPORATION. NO RIGHTS OF REPRODUCTION ARE IMPLIED. ALL DIMENSIONS ARE SUBJECT TO NORMAL MANUFACTURING VARIATIONS.

Amphenol

Sine Systems - www.amphenol-sine.com
44724 Morley Drive
Clinton Township, MI 48036

RECEPTACLE, 4 PIN, AT SERIES, STRAIN RELIEF END CAP, REDUCED DIA. WIRE SEAL

SIZE	TYPE	DWG NO:	REVISION
B	C-	AT04-4P-SR02XXX	A5

SCALE: NONE SHEET 1 OF 1

TITLE: RECEP, 4 PIN, AT, STRAIN RELIEF, REDUCED DIA WIRE SEAL
DWG NO: AT04-4P-SR02XXX
REV: A5
SH: 1
OF: 1